TM-8078700504

REMOTE CONTROL UNIT

RCU-9310R

OPERATION and MAINTENANCE MANUAL

SUNAIR 3101 SW Third Avenue, Ft. Lauderdale, FL 33315-3389

PRODUCT SERVICE:

In case of difficulty please contact the Sunair Product Service Department, between the hours of 8:00 AM and 5:00 PM or write to:

Product Service Dept.
Sunair Electronics, Inc.
3101 SW Third Avenue
Ft. Lauderdale, FL 33315-3389
U.S.A.

Telephone: (954) 525-1505
Fax: (954) 765-1322

TRAINING:

Sunair offers training programs of varying lengths covering operation, service, and maintenance of all Sunair manufactured equipment. For details please contact the Product Service Department.

TABLE of CONTENTS

Section	Description	Page
I	**GENERAL INFORMATION**	
	1.1 SCOPE OF MANUAL	1-1
	1.2 PURPOSE OF EQUIPMENT	1-1
	1.3 GENERAL DESCRIPTION	1-1
	1.4 TECHNICAL SPECIFICATIONS	1-2
	1.5 ENVIRONMENTAL SPECIFICATIONS	1-2
	1.6 EQUIPMENT SUPPLIED	1-3
	1.7 OPTIONS AVAILABLE	1-3
II	**INSTALLATION**	
	2.1 GENERAL	2-1
	2.2 UNPACKING AND INSPECTION	2-1
	2.3 RETURN OF EQUIPMENT TO FACTORY	2-1
	2.4 GENERAL INSTALLATION AND MOUNTING INFORMATION	2-2
	2.4.1 GENERAL INSTALLATION	2-2
	2.4.2 BASE STATION INSTALLATION	2-9
	2.4.3 RACK INSTALLATIONS	2-9
III	**OPERATION**	
	3.1 GENERAL	3-1
	3.2 PRIMARY OPERATIONS	3-4
	3.2.1 REMOTE RECEIVER SET UP FOR MODE AND AGC	3-4
	3.2.2 ESTABLISHING AN OPERATING FREQUENCY	3-5
	3.2.3 MANUAL TUNING	3-6
	3.2.4 PANEL LIGHTING	3-7
	3.2.5 OPERATING WITH PRESET CHANNELS	3-7
	3.2.6 MANUAL CHANNEL SCANNING	3-8
	3.2.7 LOADING PRESET CHANNEL FREQUENCIES	3-9
	3.2.8 BFO OPERATION	3-12
	3.3 EQUIPMENT SET UP	3-12
	3.3.1 BITE (Built in Test Equipment)	3-12

TABLE of CONTENTS (Cont...)

Section	Description	Page
	3.3.1.1 REMOTE CONTROL UNIT SELF-TEST (LOCAL BITE)	3-13
	3.3.1.2 RECEIVER TEST (REMOTE BITE)	3-14
	3.3.2 METER FUNCTIONS	3-16
	3.3.3 SPEAKER SELECT FUNCTIONS	3-17
	3.3.4 'MHz' or 'kHz' FREQUENCY DISPLAY	3-18
	3.3.5 TIME DISPLAY	3-18
	3.3.6 'I/O' PORT SET UP	3-20
	3.3.7 ADDRESS AND SOFTWARE REVISION LEVEL	3-23
	3.3.8 'CW' FILTER	3-24
	3.3.9 LINE AUDIO SELECTION	3-24
3.4	ADVANCED OPERATIONS	3-25
	3.4.1 RECEIVER SCANNING	3-26
	3.4.2 OPTIONS	3-29
IV	**THEORY OF OPERATION**	
4.1	REMOTE CONTROL UNIT-RECEIVER INTERFACE AND INTERACTION	4-1
4.2	REMOTE CONTROL UNIT	4-1
	4.2.1 FRONT PANEL ASSEMBLY 3A1	4-3
	4.2.2 CPU ASSEMBLY 3A2A1	4-3
	4.2.2.1 GENERAL	4-3
	4.2.2.2 MICROPROCESSOR U2	4-3
	4.2.2.3 ERASABLE PROGRAMMABLE READ-ONLY MEMORY (EPROM) U13 and U14	4-3
	4.2.2.4 ELECTRICALLY ERASABLE PROGRAMMABLE READ ONLY MEMORY (EEPROM) U8	4-4
	4.2.2.5 STATIC RANDOM ACCESS MEMORY (SRAM) U3	4-4
	4.2.2.6 OPTIONAL SMART WATCH U14(A)	4-4
	4.2.3 OPTOCOUPLER ASSEMBLY 3A2A1A1	4-4
	4.2.4 AUDIO/REMOTE AUDIO ASSEMBLIES 3A2A2/3A2A4	4-4

TABLE of CONTENTS (Cont...)

Section	Description	Page
	4.2.5 I/O ASSEMBLY 3A2A3	4-5
	4.2.6 POWER SUPPLY ASSEMBLIES 3A3, 3A3A1, and 3A3A2	4-5
V	**FAULT ISOLATION/MAINTENANCE AND REPAIR**	
5.1	GENERAL	5-1
5.2	DISASSEMBLY	5-1
	5.2.1 TOP OR BOTTOM COVER REMOVAL	5-1
5.3	TEST SET UP	5-1
	5.3.1 PRELIMINARY	5-1
5.4	BITE	5-1
	5.4.1 PRELIMINARY	5-1
	5.4.2 COMMON MODULES	5-4
	5.4.2.1 FRONT PANEL FAULT	5-4
	5.4.2.2 CPU FAULT	5-4
	5.4.2.3 I/O FAULT	5-5
	5.4.2.4 AUDIO FAULT	5-5
	5.4.2.5 POWER SUPPLY FAULT	5-6
5.5	TROUBLESHOOTING WITH SELF-SURVEILLANCE BITE	5-6
	5.5.1 AC POWER SUPPLY	5-6
	5.5.2 INSTALLATION OF NEW BACKLIGHT DEVICES FOR FRONT PANEL LCDs	5-12
5.6	TEST EQUIPMENT REQUIRED OR EQUIVALENT	5-16
5.7	TEST AND ALIGNMENT	5-16
	5.7.1 RECEIVE REMOTE AUDIO	5-16
	5.7.2 SOFTWARE SWITCH SETTING CHECKS	5-20
5.8	SCHEMATICS AND PARTS LISTS	5-21

TABLE of ABBREVIATIONS

ADDR Address
AGC Automatic Gain Control
ALC Automatic Level Control
AM Amplitude Modulation
AME Amplitude Modulation Equivalent
AMP/AMPL Amplifier
ARQ Automatic Request
AUD Audio
AUTO Automatic
AUX Auxiliary
BAUD A variable unit of data transmission speed (bits per second)
BELL U.S. Telephone standards
BFO Beat Frequency Oscillator
BITE Built In Test Equipment
BRD Board
CH /CHAN /CHL/CHN Channel
CLR Clear
CMOS Complementary Metal Oxide Semiconductor
CPLR Coupler
CPU Computer
CW Carrier Wave
dB Decibel
dBm Decibels referred to 1 milliwatt across 600 ohms
DSBSC Double Sideband Suppressed Carrier
DSP Display
DUART Dual Asynchronous Receive/Transmit
EEPROM Electrically Erasable and Programmable Read Only Memory
EPROM Electrically Programmable Read Only Memory
EMI Electromagnetic Radiation Interference
ENTR Enter
FAX Facsimile
FEC Forward Error Correction
FREQ Frequency
FSK Frequency Shift Keying
FWD Forward
GRP Group
HF High Frequency
Hz Hertz
IC Integrated Circuit
IF Intermediate Frequency
I/O Input/Output
IONCAP Ionospheric Communications Analysis and Prediction
kHz Kilohertz
kW Kilowatt
ISB Independent Sideband
LCD Liquid Crystal Display
LCL Local
LED Light Emitting Diode
LK Link
LO Local Oscillator
LP/LPX Lincompex
LRU Lowest Repairable Unit
LSB Lower Sideband
LT Light
LVL Level
MAN Manual
M CH Manual Channel
MED Medium
MHz Megahertz
MIC Microphone
MIL-STD Military Standard
MNL Manual
ms Millisecond
MTTR Mean Time To Repair
MTR Meter
NAR Narrow
O.D. Olive Drab
PA Power Amplifier
PC Printed Circuit
PEP Peak Envelope Power
PLL Phase-Locked Loop
P/N Part Number
PNL Panel
POSTSL Post-Selector
PRESEL Pre-Selector
PTT Push-To-Talk
PWR Power
RCV/RX Receive
REFL Reflected
REV Revision
RF Radio Frequency
RFI Radio Frequency Interference
RFL Reflected
RMT Remote
RS232 Computer control, hardwired up to 50 feet maximum
RS422 Computer control, hardwired up to 4000 feet maximum
RS485 Computer control, hardwired for multiple users
RTTY Radio Teletype
SEL Select
SLO Slow
S MTR Signal Strength Meter
SPKR Speaker
SPLX Simplex
SRAM Static Random Access Memory
SSB Single Sideband
TCXO Temperature Controlled Crystal Oscillator
TGC Transmit Gain Control
THD Total Harmonic Distortion
TTL Transistor Transistor Logic
TX/XMT Transmit
USB Upper Sideband
UTC Universal Time
VCO Voltage Controlled Oscillator
VHF Very High Frequency
VRMS Volts Root Mean Square
VSWR Voltage Standing Wave Ratio
W Watt
WPM Words Per Minute
* Asterisk indicates function selected

LISTING of FIGURES

Section	Description	Page
II	**INSTALLATION**	
	Figure 2.4.1.1 RCU-9310R Outline Dimensions and Connector Locations.	2-4
	Figure 2.4.1.2 Interconnection of RCU-9310R Remote Control Unit and R-9200 Receiver.	2-5
	Figure 2.4.1.3 FSK, RS-232, RS-422, or RS-485 Wiring Diagrams.	2-6
	Figure 2.4.1.4 RCU-9310R Remote Audio to R-9200 Audio Wiring Diagram.	2-7
	Figure 2.4.1.5 RCU-9310R Audio to External Data Modems Wiring Diagram.	2-8
	Figure 2.4.3 Installation of RCU-9310R in Equipment Rack.	2-9
III	**OPERATION**	
	Figure 3.1.1 Front Panel Controls for the RCU-9310R.	3-1
	Figure 3.1.2 Operational Display Information Location.	3-2
	Figure 3.2.1 RCU-9310R Remote Control Displays.	3-5
	Figure 3.2.2 RCU-9310R Operational Controls.	3-5
	Figure 3.2.3 RCU-9310R Operational Controls.	3-6
	Figure 3.2.5 RCU-9310R Operational Controls.	3-7
	Figure 3.2.6 RCU-9310R Operational Controls.	3-8
	Figure 3.2.7.1 RCU-9310R Channel Loading Controls.	3-9
	Figure 3.2.7.2 RCU-9310R Feature Menu Display.	3-10
	Figure 3.2.7.3 RCU-9310R Feature Menu Display.	3-11
	Figure 3.2.8 RCU-9310R Displays, with BFO Enabled.	3-12
	Figure 3.3.1.1 RCU-9310R Feature Menu, BITE Selection.	3-13
	Figure 3.3.1.2 RCU-9310R BITE Submenu.	3-13
	Figure 3.3.2.1 RCU-9310R Operational Displays.	3-16
	Figure 3.3.2.2 RCU-9310R Feature Menu Display.	3-16
	Figure 3.3.3.1 RCU-9310R Feature Menu Display.	3-17
	Figure 3.3.4 RCU-9310R Operational Displays.	3-18

LISTING of FIGURES (Cont...)

Section	Description	Page
	Figure 3.3.5.1 Feature Menu Display for Selection of Time.	3-18
	Figure 3.3.5.2 Time Display and Time Set Display.	3-19
	Figure 3.3.5.3 Time Display.	3-19
	Figure 3.3.5.4 'Set-Time' Feature Menu Display.	3-20
	Figure 3.3.6.1 RCU-9310R I/O Port Connector.	3-20
	Figure 3.3.6.2 Feature Menu of Port A Selection.	3-21
	Figure 3.3.6.3 Port A Conditioning Feature Menu Display.	3-21
	Figure 3.3.6.4 Baud Rate Display.	3-22
	Figure 3.3.6.5 Baud Rate Selection Menu 1.	3-22
	Figure 3.3.6.6 Baud Rate Selection Menu 2.	3-22
	Figure 3.3.7.1 Address and Revision Level Feature Menu Display.	3-23
	Figure 3.3.7.2 Feature Menu Display for Selection of Address.	3-23
	Figure 3.3.8 Feature Menu Display for Selection of 'CW' Option.	3-24
	Figure 3.3.9.1 Feature Display of Audio Port Selection Menu.	3-25
	Figure 3.3.9.2 Line Audio Selection Feature Menu Display.	3-25
	Figure 3.4.1.1 Operational Display for Channelized Mode.	3-26
	Figure 3.4.1.2 Feature Menu Display for 'SCAN' Select Key.	3-26
	Figure 3.4.1.3 Feature Menu Display for 'SCAN' Function.	3-27
	Figure 3.4.1.4 Feature Menu Display for 'SCAN LOAD' Select Key.	3-27
	Figure 3.4.2.1.1 Feature Menu Display for LSB Filter Selection.	3-29
	Figure 3.4.2.1.2 Feature Menu Display for LSB Filter Mode Selection.	3-29
	Figure 3.4.2.2.1 Feature Menu Display for USB Filter Selection.	3-30
	Figure 3.4.2.2.2 Feature Menu Display for USB Filter Mode Selection.	3-30
	Figure 3.4.2.3.1 Feature Menu Display for Pre-selector Selection.	3-31
IV	**THEORY OF OPERATION**	
	Figure 4.1 RCU-9310R Remote Control Unit Block Diagram.	4-2
V	**FAULT ISOLATION/MAINTENANCE AND REPAIR**	
	Figure 5.2.1.1 Top/Bottom and Card Cage Covers Removal.	5-2

LISTING of FIGURES (Cont...)

Section	Description	Page
Figure 5.4.1.1	RCU-9310R Feature Menu, BITE Selection.	5-3
Figure 5.4.1.2	RCU-9310R BITE Submenu.	5-3
Figure 5.4.1.3	Top View RCU-9310R LRU 'Fault Indicators'.	5-5
Figure 5.4.2.1	Major Assembly Locations.	5-8
Figure 5.4.2.2	Removal of Front and Rear Panel and Major Assemblies Locations.	5-9
Figure 5.4.2.3	Removal/Replacement of CPU 3A2A1, I/O 3A2A3.	5-10
Figure 5.4.2.4	Removal/Replacement of I/O 3A2A3 or FSK 3A2A3A1.	5-11
Figure 5.5.2.1	Removal and Installation of Front Panel PC Assembly.	5-13
Figure 5.5.2.2	Removal and Installation of LCD Assembly.	5-14
Figure 5.5.2.3	Installation of Backlighting Devices.	5-15
Figure 5.7.1.1	Top View RCU-9310R Alignment Adjustment Locations.	5-18
Figure 5.7.1.2	Receive Remote Audio Test Set Up.	5-18
Figure 5.7.1.3	Receive Path Audio.	5-19
Figure 5.7.2	Switch Settings for 3A2A1 S1.	5-20
Figure 5.8.1	RCU-9310R Assemblies and Subassemblies.	5-21
Figure 5.8.2	Final Tested RCU-9310R, Chassis Assembly 3A3, and Connector Kit.	5-23
Figure 5.8.3	Front Panel Assembly 3A1, page 1 of 6.	5-24
Figure 5.8.4	Remote RF Gain Control Assembly, 3A1A1A1, page 1 of 2.	5-29
Figure 5.8.5	PC Assembly, Mother Board 3A2A5, page 1 of 4.	5-32
Figure 5.8.6	PC Assembly, CPU 3A2A1, page 1 of 8.	5-36
Figure 5.8.7	PC Assembly, OPTOCOUPLER 3A2A1A1, page 1 of 3.	5-44
Figure 5.8.8	PC Assembly, Audio, 3A2A2, page 1 of 12.	5-47
Figure 5.8.9	PC Assembly, Audio Remote 3A2A4, page 1 of 2.	5-59
Figure 5.8.10	PC Assembly, I/O Board 3A2A3, page 1 of 4.	5-61
Figure 5.8.11	PC Assembly, FSK Modem 3A2A3A1, page 1 of 2.	5-65
Figure 5.8.12	AC/DC Power Supply Chassis and Interconnect Diagram, page 1 of 1.	5-67
Figure 5.8.13	PC Assembly, 28V Regulator, 5 Amp 3A3A1,	

LISTING of FIGURES (Cont...)

Section	Description	Page
	page 1 of 2.	5-68
Figure 5.8.14	PC Assembly, 5/12V Regulators 3A3A2, page 1 of 2.	5-70
Figure 5.8.15	PC Assembly, Audio Connectors 3A3A3, page 1 of 2.	5-72

SECTION I

GENERAL INFORMATION

1.1 SCOPE OF MANUAL

This manual contains information necessary to install, operate, and maintain the RCU-9310R Remote Control Unit. Installation information is in Section II. Operating Instructions are in Section III. Theory of Operation is in Section IV. Maintenance and Repair Procedures are in Section V. Information in this manual applies to all equipment configurations, unless otherwise stated in the text or illustrations.

1.2 PURPOSE OF EQUIPMENT

The RCU-9310R Remote Control Unit is designed to provide complete operational control of a remotely-located R-9200 Receiver.

The RCU-9310R allows an operator at a remote site to access and perform all Receiver primary functions: establishing operating frequencies; manual tuning; and loading, scanning, and operating with preset frequency channels.

The RCU-9310R also enables the remote operator to perform several non-operational, periodic, functions related to equipment set up and maintenance. Diagnostic tests -- to the lowest repairable unit (LRU) -- can be selectively executed on both the receiver and the remote control unit itself. Other functions include: selection of CW filter options; connection of external devices to the RCU-9310R's output lines; local I/O port conditioning; RCU-9310R memory dump (i.e., clearing all preprogrammed channels); and receiver metering at the remote control panel.

In addition, the RCU-9310R allows the remote operator to access and use the receiver's advanced automated functions: receiver scanning of preprogrammed channels.

1.3 GENERAL DESCRIPTION

The RCU-9310R is intended for use on table tops or in base station 19-inch rack installations. However, its rugged package makes the RCU-9310R adaptable to various environments. Internally, the RCU-9310R is designed with the service technician in mind. Built-in test equipment (BITE), with descriptive front-panel readouts, and modularized plug-in assemblies make the MTTR (Mean Time To Repair) less than fifteen (15) minutes. LEDs located on the assemblies allow the technician to pinpoint faulty modules immediately. The RCU-9310R is lightweight for its capability, weighing only 20 pounds. Available in Olive Drab (OD) or Grey, the RCU-9310R is compatible with most radio station color schemes. (If a particular color other than OD or Grey is required, contact the Sunair Marketing Department for information concerning changes to the standard colors.)

The RCU-9310R has a simple, easily understood, front panel that duplicates the functions of the R-9200 Receiver. First time users can operate the equipment without extensive training. The wide screen liquid crystal display (LCD) is continuously updated by the microprocessor with operational status such as Frequency, Channel, Mode, BFO, AGC, Local or Remote Control. The LCD also contains a bar graph meter which selectively indicates signal strength, and Remote receive audio levels. Softkeys and a softkey menu LCD display selected options such as Time, CW Filter, etc. The softkeys also provide access to remote control configuration, meter selection, speaker control and other operating features not found on the front panel keyboard.

1.4 TECHNICAL SPECIFICATIONS

REMOTE INTERFACE: RS232/422/485 FSK Tone.

RECEIVER INTERFACE: Receive audio, 0 dBm adjustable into 600 ohms.

BITE: Fault isolated to module level (LRU), descriptive readout on front panel and individual module indication.

INPUT POWER: +26 VDC ±15%; 120/240 VAC ±15%; AC/DC Auto Changeover.

AUDIO OUTPUT: 5 Watts into internal speaker < 5% THD; Two independently selectable lines per side band, at -20 dBm to +10 dBm into 600 ohms; Headset, low impedance.

SQUELCH: Syllabic.

SIZE: (CM): 15.2H X 45.3W X 26.04L.
(INCHES) 5.96H X 17.83W X 10.25L

WEIGHT: (KG): 9.1
(LBS): 20

CONSTRUCTION: Modular plug-in assemblies.

1.5 ENVIRONMENTAL SPECIFICATIONS

TEMPERATURE: -30°C to +50°C.

HUMIDITY: 100% at 50°C.

RAIN: MIL-STD-810D, Method 506.2.

SHOCK: MIL-STD-810D, Method 516.3.

VIBRATION: MIL-STD-810D, Method 514.3.

1.6 EQUIPMENT SUPPLIED

The following is a list of equipment, with appropriate Sunair part numbers, supplied with the RCU-9310R Remote Control Unit.

SUPPLIED EQUIPMENT:	SUNAIR MODEL/PART NUMBERS:
RCU-9310R Remote Control Unit	8078701292 O.D. 8078701250 GRAY
Operation and Installation Manual	8078700504
Mating Connector Kit	8078000499
Power Cord Assembly, 115VAC	8076002095
or Power Cord Assembly, 230VAC	8076002192

1.7 OPTIONS AVAILABLE

The following is a list of optional equipment or accessories available for use with the RCU-9310R Remote Control Unit.

OPTIONAL EQUIPMENT/ACCESSORIES:	SUNAIR MODEL/PART NUMBERS:
Headset	0840200005
Headset (Lightweight)	1010690027
Shroud Kit for Rackmounting	1004770014 O.D. 1004770022 GRAY
Power Cord Assembly, DC	8101002294
Real-Time Clock (Smart Watch)	1011190010
12/28 VDC Converter PS-9015	8078600097
Cable Assembly Audio and Control (Made to length)	8078004591
Field Module Kit	8078907095
Cable Assembly Audio to external data modems (6 foot length)	8076004594

THIS PAGE INTENTIONALLY LEFT BLANK.

SECTION II

INSTALLATION

2.1 GENERAL

Section II contains all necessary instructions for unpacking, inspection, and, if required, reshipment of the equipment or parts. Information regarding location and mounting considerations, power requirements, ground system hook-ups, and cabling considerations is also provided.

2.2 UNPACKING AND INSPECTION

As soon as you have received your unit(s), unpack and inspect all components and accessories. Check the packing list to be sure you have received all items ordered, and that all items necessary for operation have been ordered.

NOTE: Be sure to retain the carton(s) and associated packing materials should it be necessary to reship the equipment.

Do not accept a shipment when there are visible signs of damage to the cartons until a complete inspection is made. If there is a shortage of items or any evidence of damage, insist on a notation to that effect on the shipping papers before signing the receipt from the carrier. If concealed damage is discovered after the shipment has been accepted, notify the carrier immediately in writing and await his inspection before making any disposition of the shipment. A full report of the damage should also be forwarded to Sunair's Product Services Department. Please be sure to include the following information for prompt service:

a) ORDER NUMBER.
b) MODEL AND SERIAL NUMBER.
c) NAME OF TRANSPORTATION AGENCY.
d) APPLICABLE DATES.

Upon receipt of this information, Sunair will make arrangements for repair or replacement.

2.3 RETURN OF EQUIPMENT TO FACTORY

The shipping carton for the RCU-9310R has been designed to protect the equipment during shipment. The container and its associated packing materials should be used to reship the equipment.

When necessary to return equipment to Sunair for warranty or non-warranty repair, an authorization number is required. This number can be obtained from our Product Services Department: TELEPHONE: (305) 525-1505, FACSIMILE: (305) 765-1322.

If the original shipping carton is not available, be sure to carefully pack each unit separately, using suitable cushioning material where necessary. Very special attention should be given to providing enough packing material around connectors and other protrusions from the unit. Rigid cardboard should be placed at the corners of the equipment to protect against denting. DO NOT USE DUNNAGE (e.g., STYROFOAM PEANUTS) FOR PACKING PROTECTION; it may allow the unit to shift while being shipped, and, therefore, become damaged.

When returning subassemblies or components for repair or replacement, be sure to pack each separately, using suitable cushioning material.

Shipment to be made PREPAID consigned to:

Sunair Electronics, Inc.
Product Services Department
3101 SW Third Avenue
Fort Lauderdale, Florida 33315-3389
U.S.A.

Plainly mark with indelible ink all mailing documents as follows:

US Goods Returned For Repair
Value For Customs - $(Amt.)

Mark ALL SIDES of the package:

FRAGILE - ELECTRONIC EQUIPMENT!

NOTE: Before shipping, carefully inspect the package to be sure it is marked properly and is securely wrapped.

2.4 GENERAL INSTALLATION AND MOUNTING INFORMATION

Satisfactory operation of this equipment will depend upon the care and thoroughness taken during installation.

2.4.1 GENERAL INSTALLATION

For installation and operation with modems, and other peripherals, use this manual in conjunction with their respective operating manuals for complete installation information.

Before starting installation, carefully plan equipment locations to ensure that the operating environment is suitable and that adequate access for maintenance is provided.

If operated on DC power, check for correct polarity before applying power.

The RCU-9310R Remote Control Unit and R-9200 Receiver are interconnected as shown in Figure 2.4.1.2.

NOTE: Figure 2.4.1.2 illustrates the direct cabling method for interconnecting the remote control unit and receiver. While other interface methods may be employed, the relationship between remote control unit and receiver signals must be maintained.

Connection of the RCU-9310R to power sources and other equipment may be accomplished as follows:

RCU-9310R CONNECTIVITY GUIDE.

TO ADD	CONNECTION(s)	NOTE
AC Power	AC source to J1 on rear panel.	See Figure 2.4.1.1.
DC Power (option)	DC source to J2 on rear panel.	See Figure 2.4.1.1.
Headphones	Headphones to J2 on front panel.	See Figure 2.4.1.1.
Receiver (R-9200)	Control Lines from J6 on rear panel to remote connector J8 on rear panel of R-9200.	See Figures 2.4.1.1, 2.4.1.2, 2.4.1.3, and consult R-9200 manual.
	Audio lines from J4 on rear panel to Audio connector J5 on rear panel of R-9200.	See Figures 2.4.1.1, 2.4.1.2, 2.4.1.4, and consult R-9200 manual.
External Data Modems (Direct connection RCU-9310R)	Connect modem audio and keyline to J3 on rear panel of RCU-9310R.	See Figures 2.4.1.1 and 2.4.1.5.

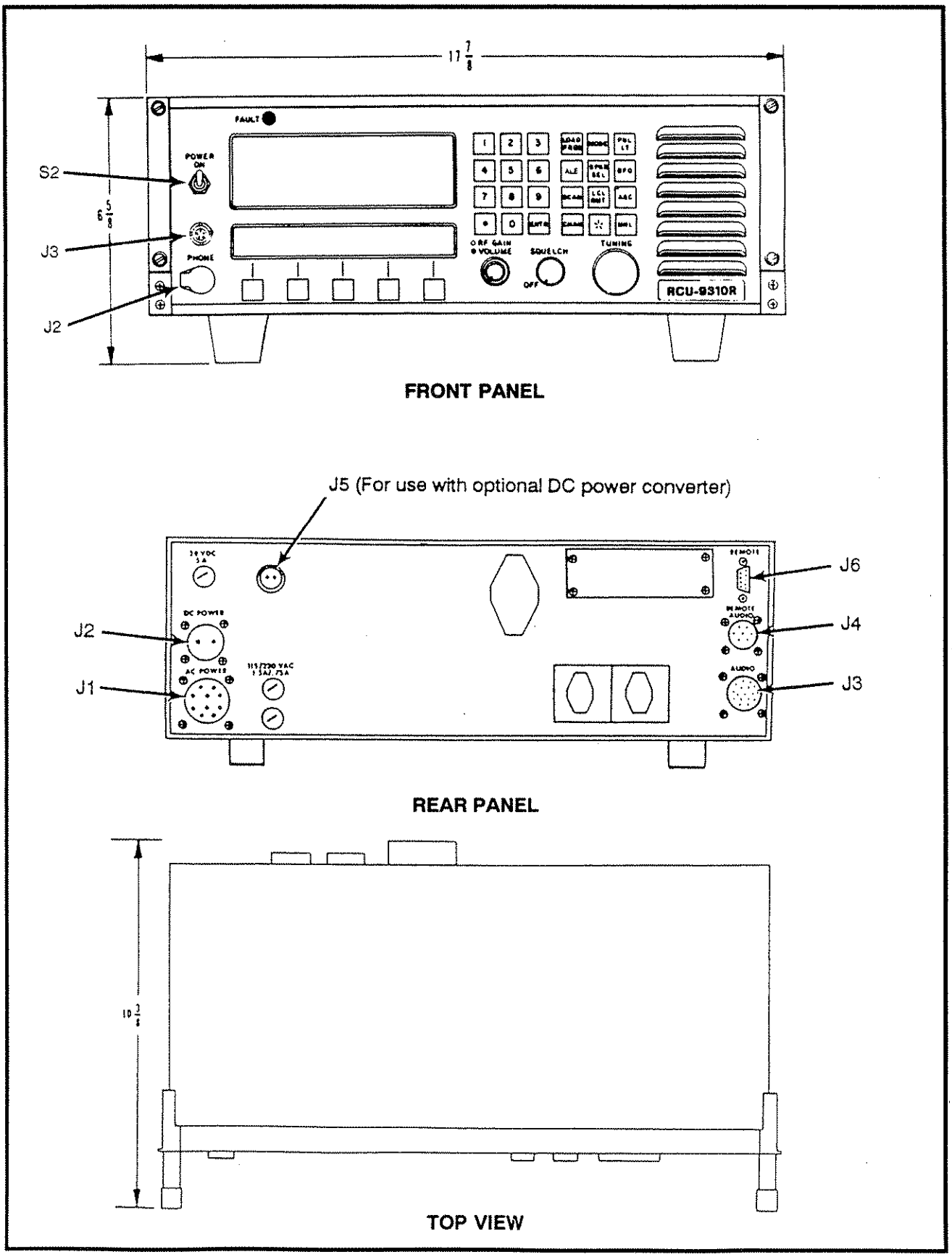

Figure 2.4.1.1 RCU-9310R Outline Dimensions and Connector Locations.

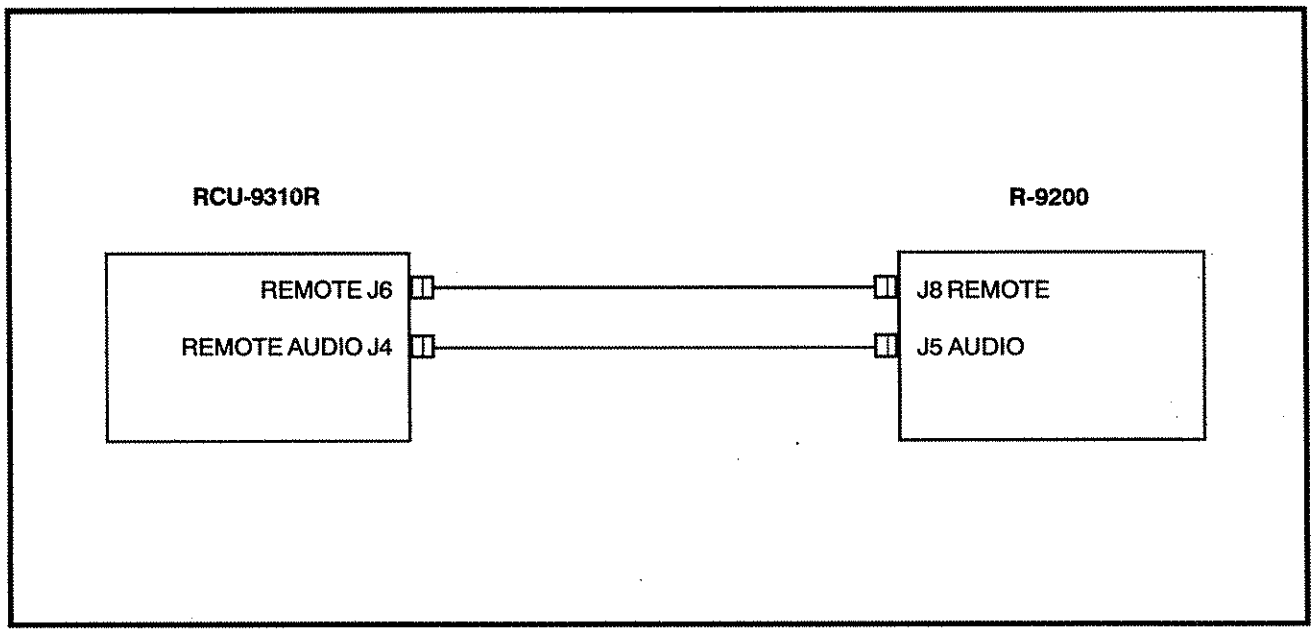

Figure 2.4.1.2 Interconnection of RCU-9310R Remote Control Unit and R-9200 Receiver.

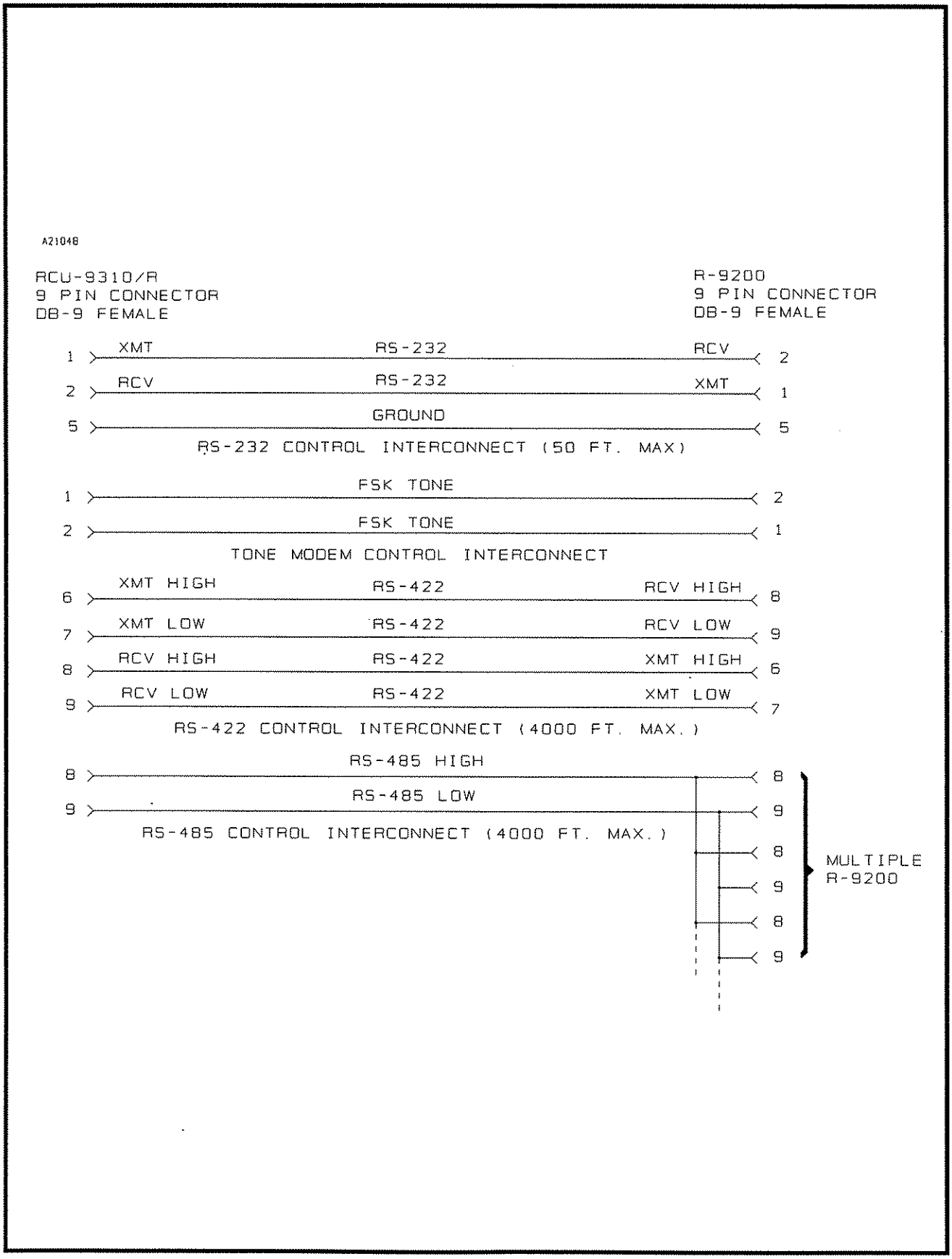

Figure 2.4.1.3 FSK, RS232, RS-422, or RS485 Wiring Diagrams.

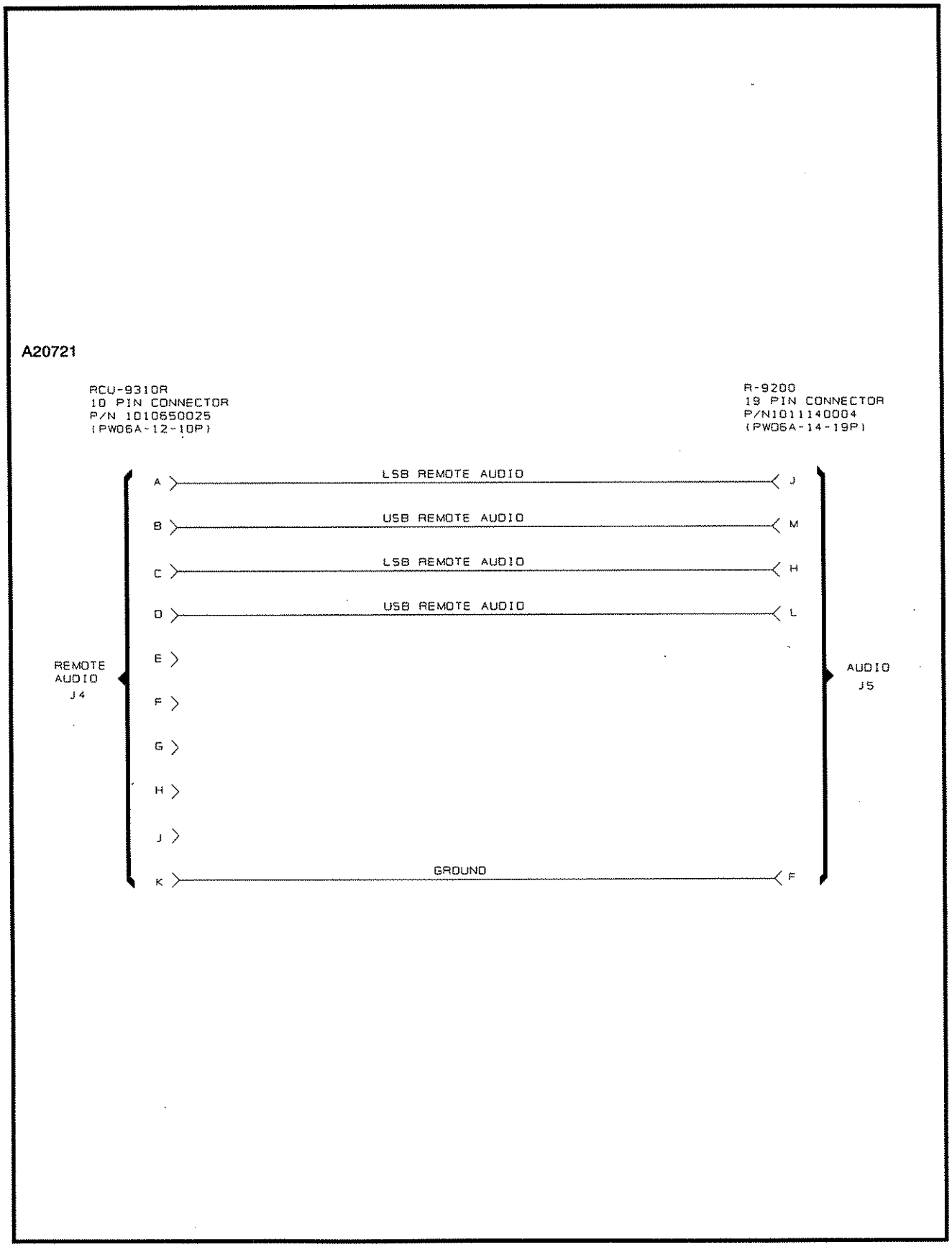

Figure 2.4.1.4 RCU-9310R Remote Audio to R-9200 Audio Wiring Diagram.

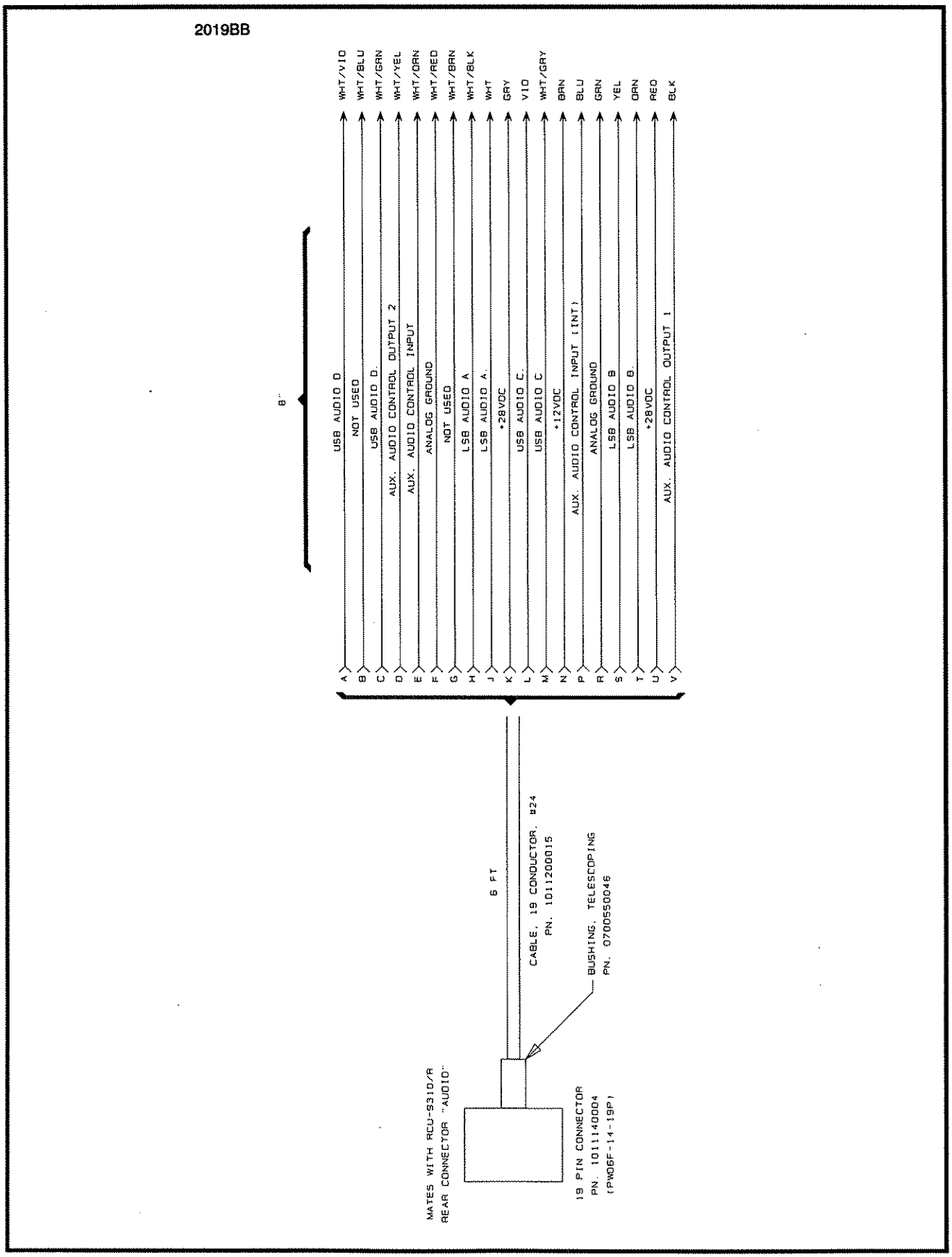

Figure 2.4.1.5 RCU-9310R Audio to External Data Modems Wiring Diagram.

2.4.2 BASE STATION INSTALLATION

The RCU-9310R is equipped with rubber feet so that it can be placed directly on a table, desk, or similar flat surface. Minimum clearances of one (1) inch at the sides and two (2) inches at the rear and top should be allowed to provide for adequate air flow. Figure 2.4.1.1, shows the applicable outline dimensions of the equipment and the location of input/output connectors for microphones, remote units, modems, signal lines, and AC and DC power.

2.4.3 RACK INSTALLATIONS

The remote control unit may be mounted in a standard nineteen- inch (19") rack using the Shroud Kit, Sunair p/n 1004770014(OD) or 1004770022(Gray). The kit includes rack mounting brackets, filler panels and trim strips, and associated hardware. In the rack-mounted configuration, the remote control unit requires a standard panel space of seven inches (7") high. Refer to Figure 2.4.3 below, for assembly details.

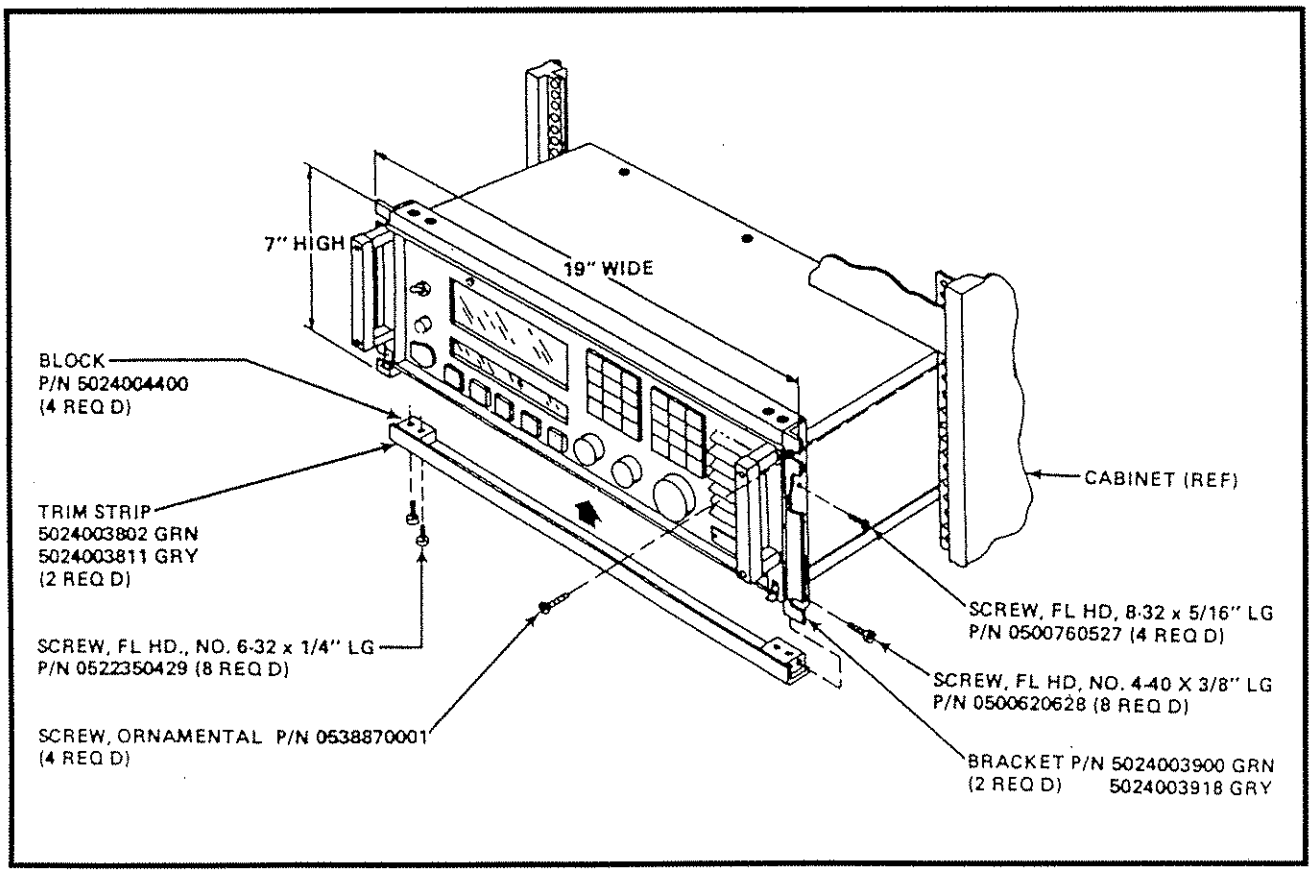

Figure 2.4.3 Installation of RCU-9310R in Equipment Rack.

THIS PAGE INTENTIONALLY LEFT BLANK.

SECTION III

OPERATION

3.1 GENERAL

This section provides the operator with the location and use of the RCU-9310R front panel controls for proper utilization of the equipment. For convenience of discussion, functions are addressed in normal sequence. However, it is not necessary to observe this order once the user becomes familiar with the equipment. Any setting may be changed independently by referring to the appropriate section in this chapter pertaining to the function in question. Reference to Figure 3.1.1 below, shows the location of the control groupings, displays, and their general purpose.

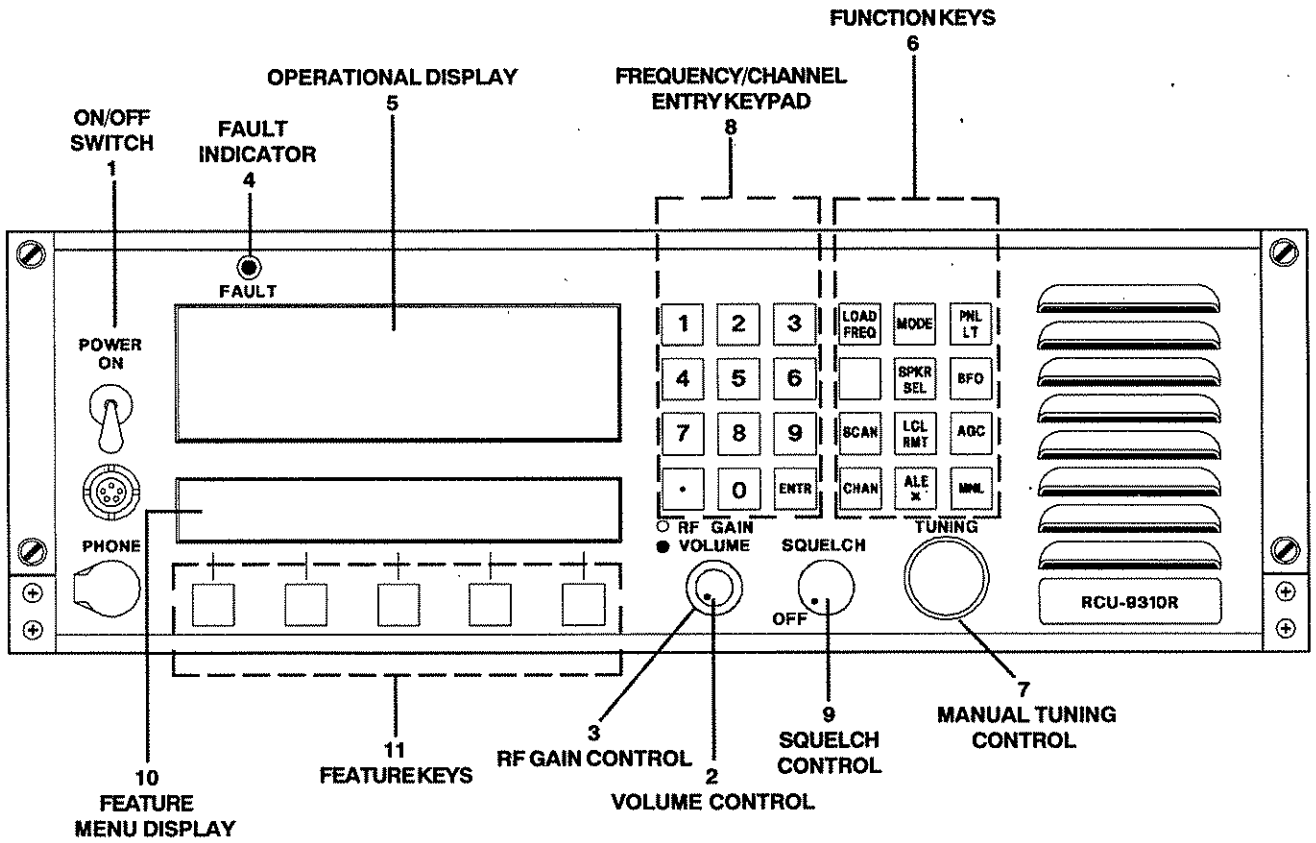

Figure 3.1.1 Front panel controls for the RCU-9310R.

1 ON/OFF SWITCH

When the switch is in the upward position, power is applied to the receiver.

2 VOLUME CONTROL (INSIDE)

When in the full counter-clockwise position the audio output is minimum. Output may be increased by advancing this control in a clockwise direction.

NOTE: The setting of this control does not affect the level of the remote audio output located at the rear surface of the equipment.

3 RF GAIN CONTROL (OUTSIDE)

When in the full clockwise position the RF Gain is at a maximum. The RCU-9310R is normally operated at this setting. In the event of operation in an extremely high signal level environment, better reception may be achieved by reducing RF Gain by turning this control in a counter-clockwise direction.

4 FAULT INDICATOR

If at any time this red indicator is lit, there is a fault in the remote control unit or in the receiver. Please check the installation and proceed to the section on BITE located in section 3.3.1 of this manual.

5 OPERATIONAL DISPLAY

This Liquid Crystal Display (LCD), provides a variety of information required to operate the equipment. Information will appear in four primary areas of the operational display as indicated in Figure 3.1.2.

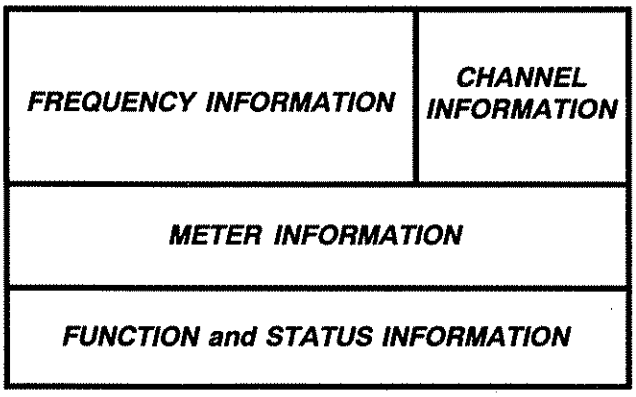

Figure 3.1.2 Operational Display Information Location.

6 FUNCTION KEYS

This grouping of twelve (12) keys are used to control or establish the primary operating functions of the equipment such as mode selection, channel selection, channel loading, AGC characteristic, local/remote operation, panel illumination, and manual receiver tuning.

7 MANUAL TUNING CONTROL

This permits manual tuning of the receiver frequency or channels. Actual movement of frequency will be indicated on the operational display.

8 FREQUENCY/CHANNEL ENTRY KEYS

This group of twelve (12) numeric keys is used for entry of frequency or channel information, either to establish a particular operating frequency or load frequency information into channel storage for later recall.

9 SQUELCH CONTROL

When this control is in the fully counter-clockwise position the equipment is unsquelched. To enable the squelch, turn the control clockwise to the desired threshold (signal strength required to unsquelch the receiver). The greater the clockwise setting of the control, the greater the signal strength required to open the squelch.

10 FEATURE MENU DISPLAY

This display provides names or functions for the five (5) keys located directly below the display. In most cases, this display will automatically indicate the appropriate selections based upon the condition of other equipment settings. The menu may be changed at will, however, by depression of the fifth key located under 'MORE'.

11 FEATURE KEYS

This grouping of five (5) 'SOFT' keys will enable the various functions indicated in the display located directly above the key.

NOTE: An asterisk (*) appearing in the display indicates that the feature preceding it is enabled or 'ON'.

Utilization of the controls of the RCU-9310R Remote Control Unit can be divided into three categories:

A. Primary Operations (Section 3.2),

B. Equipment Set-Up (Section 3.3), and

C. Advanced Operations (Section 3.4).

3.2 PRIMARY OPERATIONS

NOTE: Except where noted, all procedures are based on operating the R-9200 Receiver from the RCU-9310R Remote Control Unit. Prior to performing any of these operations, the remote control unit must be established as the point of control. See page 3-20, Section 3.3.6 I/O Port Set Up.

3.2.1 REMOTE RECEIVER SET UP FOR MODE AND AGC

Prior to performing any receiver operations with the RCU-9310R, you must ensure that the receiver is properly connected to the remote control unit. After verifying this condition, refer to Figure 3.2.1 and perform the following steps to establish RCU-9310R control over the receiver.

Turn the remote control unit 'ON' with toggle switch **1** and advance the volume control to a comfortable listening level. The operational display should appear as indicated in Figure 3.2.1, except that specific frequencies and modes will reflect the condition of the equipment when last used.

This section of the operational display, **6** ,indicates the point of control of the receiver and should read 'RMT'(Remote).

Depress the 'LCL/RMT' key **7** . The operational display, **6** , should read 'LCL'. At this point, the operational display will reflect the condition of the receiver. To change control back to the receiver simply depress the 'LCL/RMT'(Local/Remote) key **7** .

Depress 'MODE' key **2** , to select the desired mode of reception as indicated in the operational display segment at **3.** Choices are 'USB', 'LSB', 'ISB', 'CW', and 'AM'.

Depress 'AGC' key **4** , to select AGC Characteristic, which will be indicated in the operational display segment at **5.** Choices are 'AGC-S' (Slow), 'AGC-M'(Medium), and 'AGC- F'(Fast). A slow AGC characteristic is generally desirable with speech reception. A fast AGC characteristic is desirable for data reception. To select 'NO AGC' see Section 3.2.9.

NOTE: If the receiver is not turned on or not connected to the remote control unit, the message

"NO REPLY FROM REMOTE"

will appear momentarily on the operational display when the 'LCL/RMT' key is depressed.

NOTE: When the equipment is in the RMT (Remote) condition, any attempt to change frequencies, modes or other functions, except Local/ Remote, will cause the messages

"FUNCTION DISALLOWED"
(followed by)
"UNIT IN REMOTE MODE"
to appear momentarily on the operational display.

THE BASIC FUNCTIONAL PARAMETERS OF THE REMOTE RECEIVER HAVE NOW BEEN ESTABLISHED.

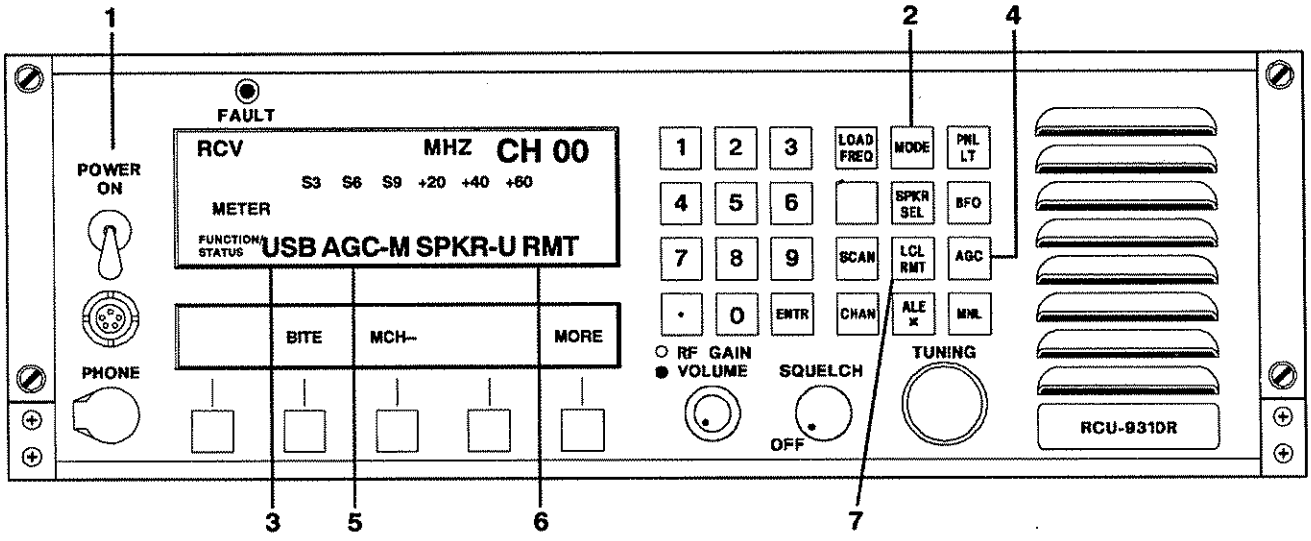

Figure 3.2.1 RCU-9310R Remote Control Displays.

3.2.2 ESTABLISHING AN OPERATING FREQUENCY

If operational display, **1** ,does not read 'M'(Manual Operation), refer to Figure 3.2.2, then depress 'MNL' key **2** . The display will now read 'M'. (The RCU-9310R's feature display will also read as indicated in **7**. Depression of the 'LOAD FREQ'(Load Frequency) key, **3** , will blank the operational display frequency display located at **4** , and change feature display to provide 'ERASE' and 'END' functions.

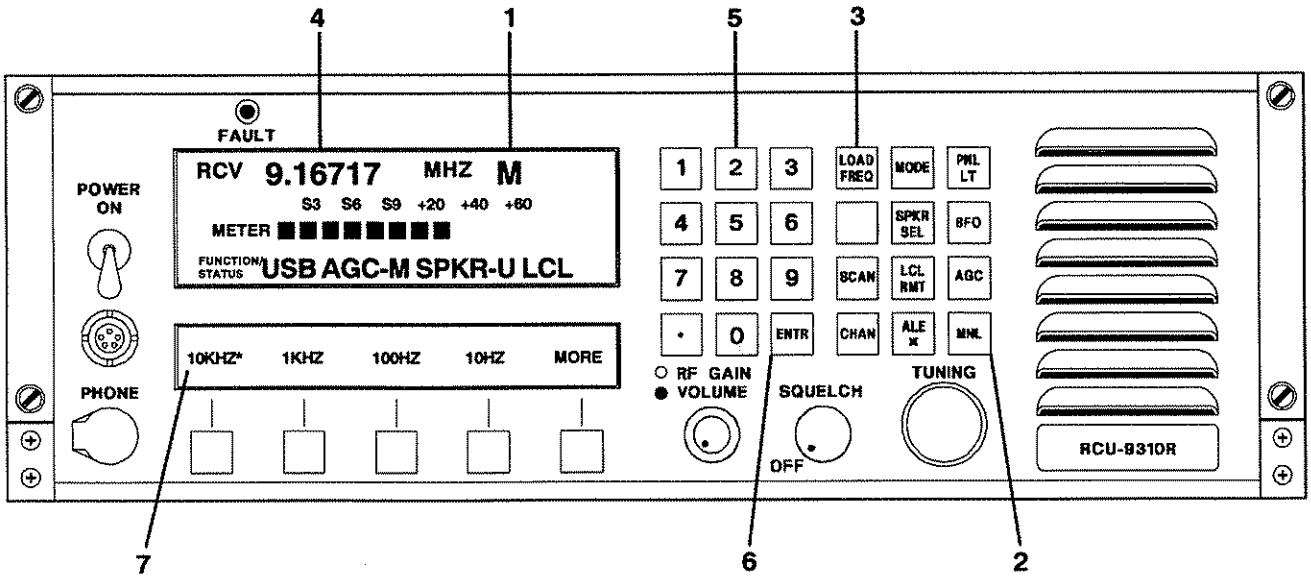

Figure 3.2.2 RCU-9310R Operational Controls.

The numeric keypad, **5** , may now be used to enter any operational frequency by entering seven (7) digits. (For frequencies less than 10MHz, the first digit entered must be '0'. The numbers being entered will appear on the display at **4** , in the order of entry from left to right. When seven (7) digits have been entered depress the 'ENTER' key, **6** , to activate the receiver.

THE SYSTEM IS NOW OPERATIONAL ON THE FREQUENCY SELECTED

NOTE: If an error is made in entering a frequency, simply depress the 'LOAD FREQ' key to clear the operational display and repeat the procedure.

NOTE: If a frequency below 100kHz is entered, the frequency will flash on and off and the message

'ILLEGAL RCV FREQ'

will appear on the operational display .

3.2.3 MANUAL TUNING

Once an initial operating frequency has been established and the RCU-9310R is in the 'M'(Manual) mode as indicated by **1** , in Figure 3.2.3, frequency can be increased or decreased by: Turning the 'Tuning' control **2** clockwise to increase frequency or counter-clockwise to decrease frequency.

The rate at which the frequency is moved (the increments or frequency 'steps') is indicated in the feature menu display at **3** .

The location of the asterisk (*) **4** , indicates the incremental change in frequency which rotation of the tuning control will produce, in this case 10kHz. To change this rate to 1kHz, 100Hz or 10Hz, simply depress the feature key **5** located below the desired setting. The asterisk (*) will move to indicate the increment selected.

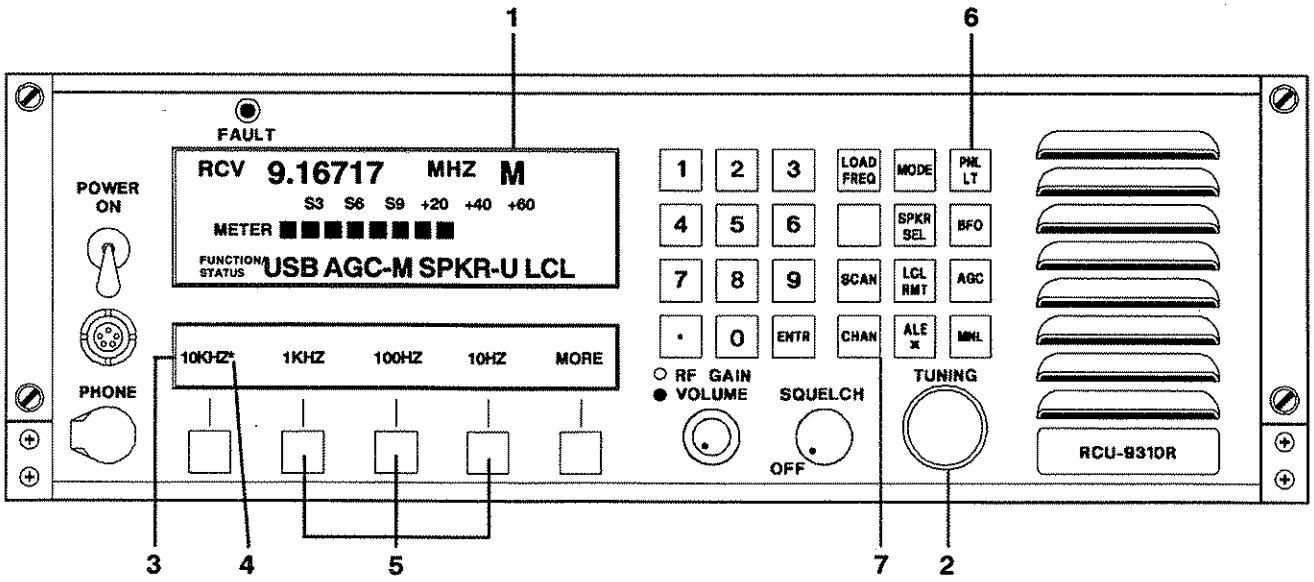

Figure 3.2.3 RCU-9310R Operational Controls.

To exit 'MANUAL TUNING' depress the "CHAN" key **7** .

3.2.4 PANEL LIGHTING

At initial turn ON the Panel Lighting will be illuminated. If no keyboard activity has been detected for approximately 30 minutes the unit will automatically turn OFF the Panel Lighting. Both the 'Operational' and 'Feature Menu' displays may be illuminated by depressing the 'PNL LT' key located at **6** in Figure 3.2.3. A second depression will turn the lighting off.

NOTE: This is strictly a 'Local' function; i.e., it does not effect the remote receiver in any way.

NOTE: The backlighting devices for the two (2) Front Panel LCDs will gradually lose their luminescence with time. For this reason the Panel Light **6** should be turned OFF whenever possible. See Section V for replacement of backlights.

3.2.5 OPERATING WITH PRESET CHANNELS

Operation using preset channel frequencies can only be accomplished if the desired frequencies have been entered into the memory of the receiver. If this has not been accomplished refer to Section 3.2.9 prior to proceeding.

If equipment is not 'ON', turn 'ON' with toggle switch **1** and advance the volume control **2** to a comfortable listening level.

Depress the 'LCL/RMT' key **8** . The operational display **9** should read 'LCL'.

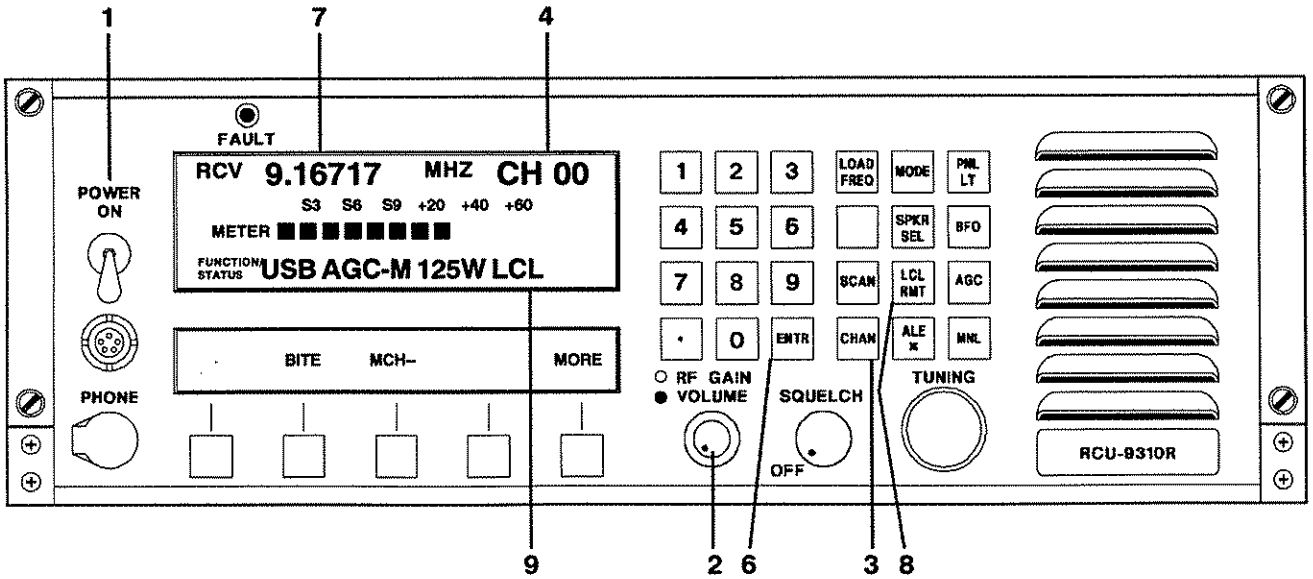

Figure 3.2.5 RCU-9310R Operational Controls.

Depress the 'CHAN' (Channel) key **3** to blank the channel number appearing at **4** .

Enter any two digit channel number from 00-127 using the numeric keypad **5** . The number entered will be shown on the operational display at **4** .

Depress the 'ENTER' key **6** . The receive operating frequency stored for the channel entered will now appear on the operational display at **7** .

NOTE: If during loading of channel number you wish to return to the last channel selected depress 'END' key on feature menu display.

THE SYSTEM IS NOW FULLY OPERATIONAL ON THE CHANNEL SELECTED.

3.2.6 MANUAL CHANNEL SCANNING

Once the equipment is in the pre-set channel mode of operation as outlined in Section 3.2.5, all of the channels programmed may be viewed and/or used by:

Depress equipment 'Feature' menu 'MORE' key, **1** , until the display **2** reads as shown in Figure 3.2.6.

Depress 'MCH'(Manual Channel) key **3** . The CH designator preceding the channel number on the operational display at **4** will change to 'MC'(Manual Channel) and an asterisk (*) will appear next to 'M CH -' in the feature menu display, denoting that the selected function has been enabled.

Rotation of the tuning control **5** will increase or decrease channel numbers **6** (in order) and the associated stored operating frequency will appear in the display at **7** .

NOTE: 'MODE' and 'AGC Characteristic' are also pre-programmable for each channel and may change in the operational display as the tuning control is rotated.

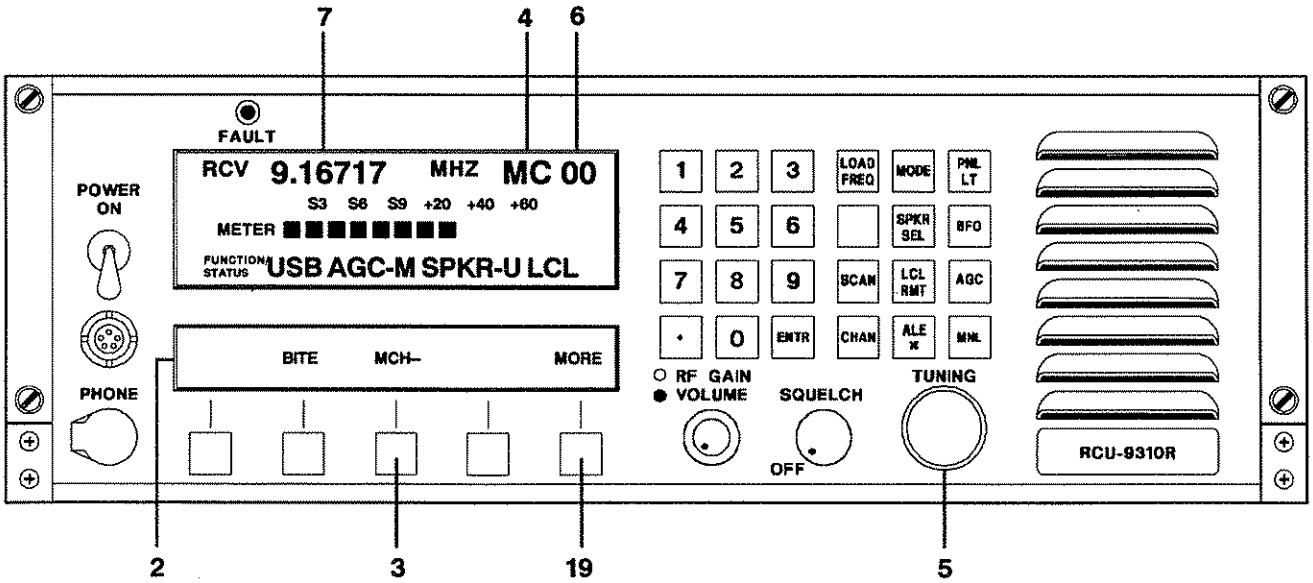

Figure 3.2.6 RCU-9310R Operational Controls.

The RCU-9310R may be set on any channel and the receiver is fully operational.

NOTE: This mode provides a rapid means of logging pre-stored channel information, if unknown.

Escaping from this method of operation may be achieved by simply depressing the 'MCH-' key **3** again. The asterisk (*) will disappear. The 'MC' designator at **4** will revert to 'CH', and the channel number **6** and frequency **7** will remain where last left in the manual channel scan operation.

Changing from the displayed channel to any other may be accomplished as described in Section 3.2.5.

3.2.7 LOADING PRESET CHANNEL FREQUENCIES

The RCU-9310R is capable of loading operating information on 128 preset channels (numbers 00-127 in the remote R-9200) for later recall and use. For each channel the operating information to be loaded consists of:

A. Receive Frequency
B. Mode of Emission
C. AGC Speed

The following procedure, referring to Figure 3.2.7.1, should be followed to enable proper loading of channels.

If equipment is not 'ON', turn 'ON' with toggle switch **1** and advance the volume control **2** clockwise to a comfortable listening level. Depress the 'CHAN' (Channel) key **3** . The operational display will now read 'CH' at **4** and blank at **5** .

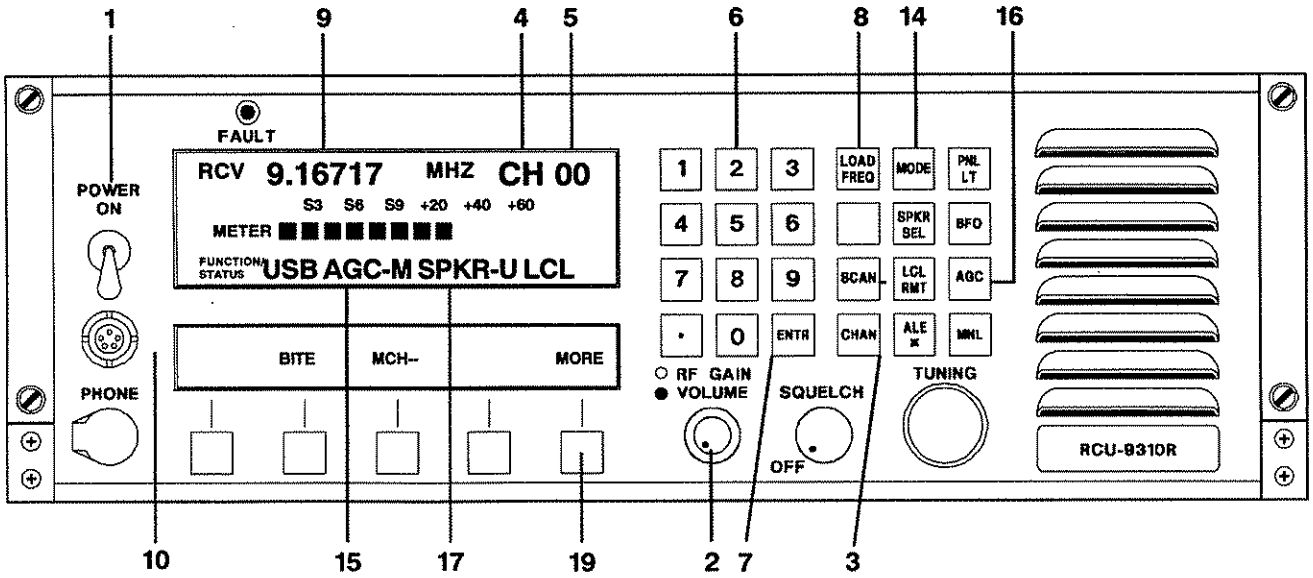

Figure 3.2.7.1 RCU-9310R Channel Loading Controls.

Use the numeric keypad **6** to enter the channel number (enter a '0' first for a number less then 10). Depress the 'ENTER' key **7** . The channel number to be programmed will now appear at **5** .

Once the desired channel number has been selected, operational information may be entered as follows:

A. To load the Receive Frequency depress the 'LOAD FREQ' key **8** . The frequency display at **9** will now be blank.

Enter the desired receive, or operating, frequency (Seven (7) digits are required. Enter '0' first if frequency is less than 10 MHz) using the numeric keypad **6** . The entered frequency will appear in order of digit entry (left to right) on the operational display at **9** .

NOTE: When the 'LOAD FREQ' key is depressed, the equipment feature display **10** will change to provide an 'ERASE' function at **11**. As shown in Figure 3.2.7.2. Depression of this key will erase the numeric frequency entry, one digit at a time, beginning with the last digit entered (right to left). When the desired digits are blanked, simply resume keypad entry of frequency. Do not depress 'END' key **18** unless you desire to abort frequency loading and have the channel revert to its original stored information.

Once the desired receive frequency has been entered, depress the 'ENTER' key **7** to store the information.

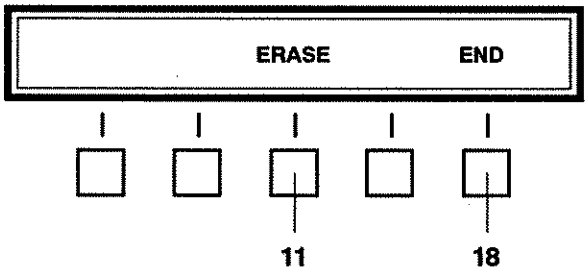

Figure 3.2.7.2 RCU-9310R Feature Menu Display.

B. To load Mode of Emission, depress the 'MODE' key **14** successively until the desired mode appears on the function display at **15** . Choices are: 'USB', 'LSB', 'CW', 'ISB', and AM. Depress 'ENTER' key **7**

NOTE: If 'CW' is selected as a mode of reception, filter selection is automatically established by default as normal, see Section 3.3.8 of this manual.

C. To load AGC speed, depress the 'AGC' key **16** successively until the desired speed appears on the operational display at **17** . Choices are 'AGC-S' (Slow), 'AGC-M' (Medium), and 'AGC-F' (Fast). Depress the 'ENTER' key **7** .

NOTE: If the mode of emission selected for this channel is 'AM' a fast AGC speed is automatically selected. If another AGC speed is desired, depress the 'AGC' key **16** successively until the desired speed appears on the operational display at **17** .

D. To select 'NO AGC' depress the equipment's Feature Menu 'MORE' key, **19** , until the feature menu display **10** reads as shown in Figure 3.2.7.3.

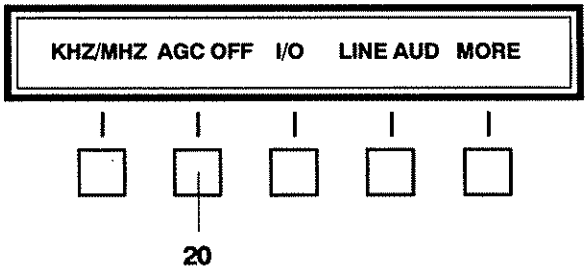

Figure 3.2.7.3 RCU-9310R Feature Menu Display.

E. Depressing 'AGC OFF' feature key, **20** will cause an asterisk (*) to appear on the operational display ('AGC OFF*'), and a '0' will be displayed at **17** .

NOTE: With the 'AGC OFF' selected the receiver will have this function for all channels. To remove this function, depress the 'MORE' key **19** until feature menu display reads as shown in Figure 3.2.7.3. Turn OFF the 'AGC OFF' by depressing key **20** again, removing the asterisk and returning the operational display to previously selected AGC speed.

All of the storage data for this channel has now been entered and the system is fully operational on this channel. Additional channels may be loaded by simply repeating this process.

3.2.8 BFO OPERATION

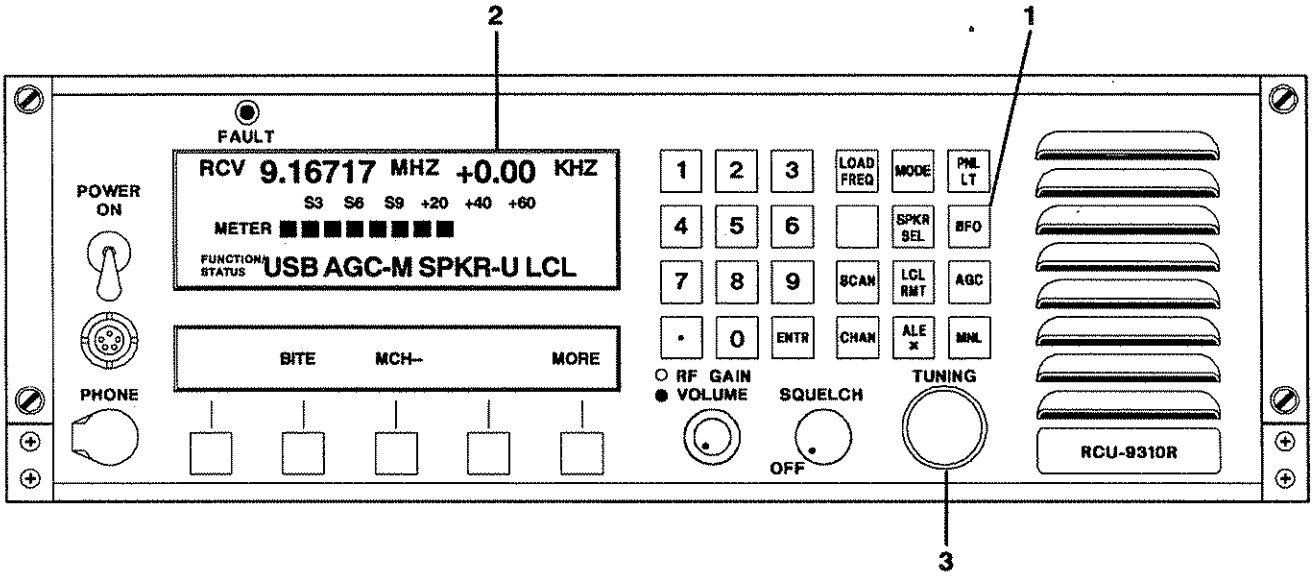

Figure 3.2.8 RCU-9310R Displays, with BFO Enabled.

Depress the 'BFO' key **1** . The Channel No., **2** in the operational display will blank and the BFO offset (initially: +0,00kHz) will appear.

The BFO offset may now be established anywhere within a +1.99kHz range by rotation of the tuning control **3**. The offset frequency is increased in 10Hz steps by clockwise rotation of this control and decreased (negative) by counter-clockwise rotation.

The BFO is disabled by simply depressing the 'BFO' key **1** again.

NOTE: BFO offset frequency is established only for the 'USB', 'LSB', 'CW', and 'ISB' mode of the receiver.

3.3 EQUIPMENT SET UP

This section addresses those features and functions that are either of secondary importance or need be accomplished only infrequently, usually at the time of commissioning.

3.3.1 BITE (Built In Test Equipment)

The RCU-9310R Remote Control Unit and its companion R-9200 receiver are both equipped with sufficient self-diagnostics to assure operators or maintenance personnel that all internal subassemblies (LRU's) are functioning correctly; or, in the case of a malfunction, which specific LRU(s) is (are) faulty. This feature may be accessed independently of any prior established modes of operation.

The user may access and execute both of the BITE programs -- the R-9200 and the RCU-9310R -- from the remote control unit.

Refer to Figure 3.3.1.1 and perform the following steps to access the BITE menu.

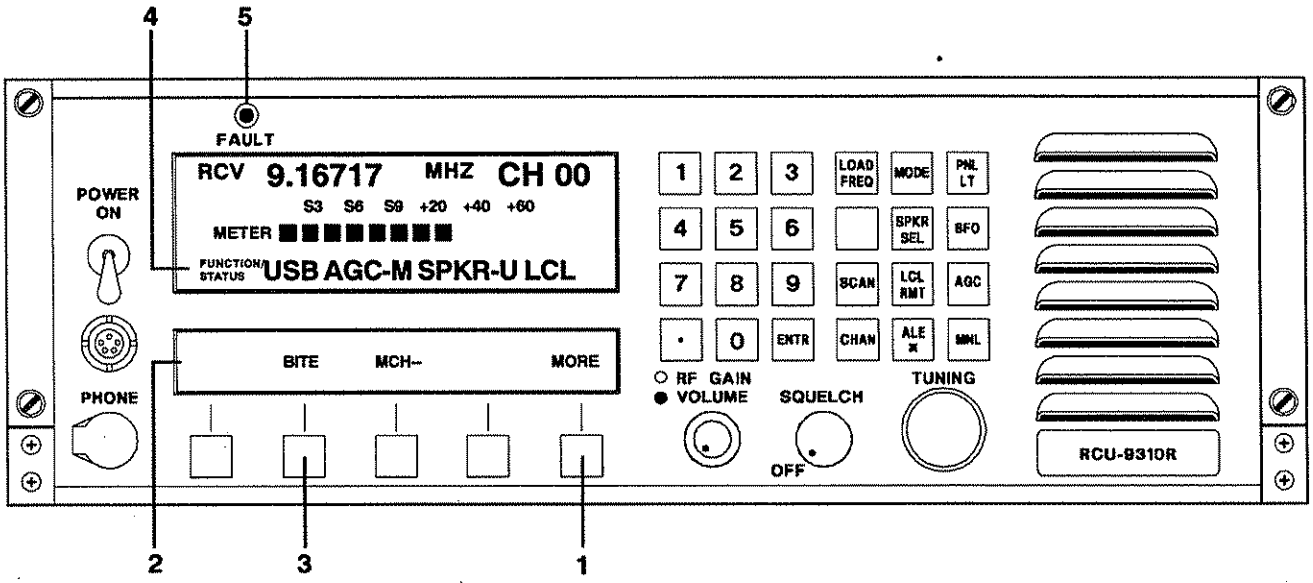

Figure 3.3.1.1 RCU-9310R Feature Menu, BITE Selection.

Depress the 'MORE' key **1** successively until the feature menu display **2** shown in Figure 3.3.1.1 appears.

Depress the 'BITE' key **3** . The message

'SEL REMOTE OR LOCAL'

will appear on the operational display **4** , and the BITE submenu shown in Figure 3.3.1.2 will be displayed on the feature menu display.

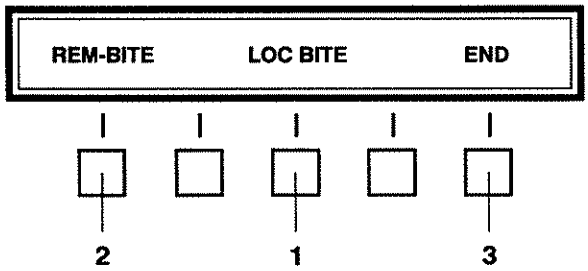

Figure 3.3.1.2 RCU-9310R BITE Submenu.

3.3.1.1 REMOTE CONTROL UNIT SELF-TEST (LOCAL BITE)

The RCU-9310R Remote Control Unit can be tested independently, with or without a receiver connected.

To execute the remote control unit's self-contained BITE program, refer to Figure 3.3.1.2 and perform the following steps.

Depress the 'LOC BITE' key **1** . The RCU-9310R will initiate a self-test routine and will display messages and/ or results on the operational display. The initial message will be

'BITE IN PROGRESS'

As each module is tested, a corresponding message will appear briefly on the operational display in the following order:

'FRONT PANEL O.K.'

'CPU O.K.'

'POWER SUPPLY O.K.'

'I/O O.K.'

NOTE: Audio tone is heard in speaker at this point and turned off at 'TEST COMPLETED'.

'AUDIO O.K.'

At the successful conclusion of the test, the message

'TEST COMPLETED'

will appear on the operational display. To return the remote control unit to its operational state, depress the 'END' key **3** Figure 3.3.1.2.

NOTE: If a receiver is connected to the remote control unit and you wish to run the 'Remote' BITE program (i.e., the receiver test) after completing the 'Local' test, do not depress the 'END' key. Instead, depress the 'REM - BITE' key, **2** , and refer to Section 3.3.1.2.

If any of the modules (LRUs) are faulty, the BITE program will halt, the front panel 'FAULT' indicator **5** will light, and the operational display will display a message indicating the faulty module:

'FRONT PANEL FAULT'

'CPU FAULT'

'POWER SUPPLY FAULT'

'I/O FAULT'

'AUDIO FAULT'

In the event of a fault, proceed to Section V of this manual, concerned with fault isolation and repair.

3.3.1.2 RECEIVER TEST (REMOTE BITE)

Refer again to Figure 3.3.1.1 and perform the following steps to access and execute the receiver's BITE program from the remote control unit.

Depress the 'MORE' key, **1** , successively until the feature menu **2** shown in Figure 3.3.1.1 appears.

Depress the 'BITE' key **3** . The message

'SEL REMOTE OR LOCAL'

will appear on the operational display , and the BITE submenu shown in Figure 3.3.1.2 will be displayed on the feature menu display.

Depress the 'REM - BITE' key **1** . The message

'REMOTE BITE IN PROG'

will appear on the operational display. When the Remote BITE program has been successfully completed, the message

'TEST COMPLETED'

will be displayed.

To return the remote control unit and receiver to their operational states, depress the 'END' key **3** . If the Remote BITE program detects a fault in any of the receiver's modules, the program will halt, the front panel operational display will display a message indicating the faulty module:

'FRONT PANEL FAULT'

'I/O FAULT'

'CPU FAULT'

'SYNTHESIZER FAULT'

'AUDIO FAULT'

'IF FAULT'

'FRONT END FAULT'

'FILTER MODULE FAULT'

'POWER SUPPLY FAULT'

In the event of a fault in the receiver, the appropriate fault isolation and repair procedures should be performed. Refer to Section V of the R-9200 Manual. The remote control unit itself can be restored to normal operation by depressing the 'END' key **3** .

3.3.2 METER FUNCTIONS

A variety of metering functions are available on the Remote Control Unit's front panel operational display at **1** in Figure 3.3.2.1 for the receive signals.

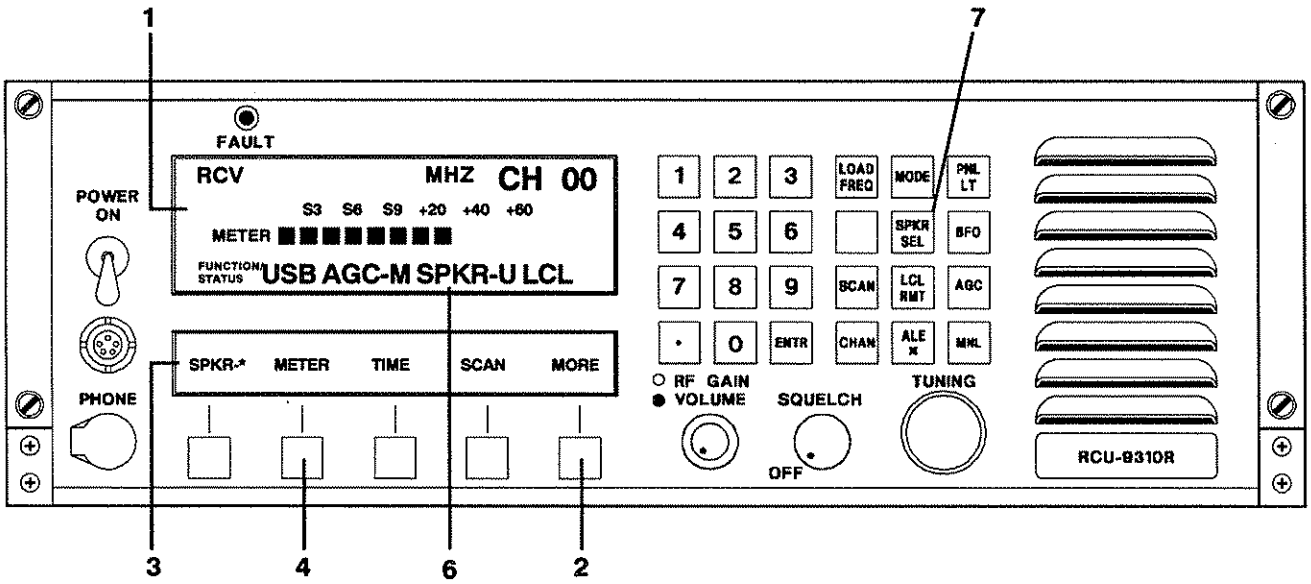

Figure 3.3.2.1 RCU-9310R Operational Displays.

The available Meter functions are:

IN RECEIVE:

'S MTR' - Signal Strength Meter (shown in Figure 3.3.2.1).
'LINE' - 600 OHM Line Audio Outputs (either USB or LSB).

To make the desired selections depress the feature menu select key 'MORE' **2** until the feature menu display appears as indicated by **3** .

Depress the 'METER' function key **4** and the feature menu display will appear as shown in Figure 3.3.2.2.

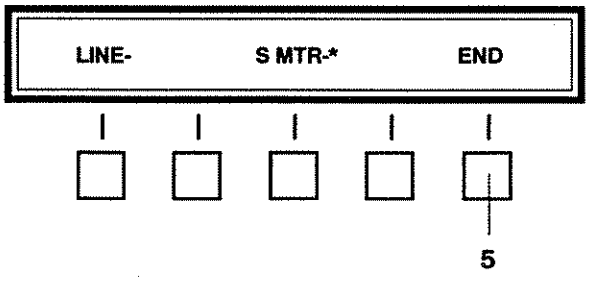

Figure 3.3.2.2 RCU-9310R Feature Menu Display.

To select the desired Receive Meter display simply depress the feature key below the desired display.

NOTE: The asterisk (*) will move to the function selected indicating that it has been enabled.

Once the selection has been made, depress the menu selector key 'END' **5** and the display will revert to that shown in Figure 3.3.2.1, and the receive metering will now read at **1** .

3.3.3 SPEAKER SELECT FUNCTIONS

The speaker is normally enabled in the RCU-9310R by default. In 'ISB' mode ONLY the speaker may be connected to either 'USB' or 'LSB' audio and its location is indicated in the operational display at **6** in Figure 3.3.2.1. To shift the speaker from one sideband audio to the other, simply depress the 'SPKR SEL' key **7** , and **6** will change from 'U' to 'L'.

To disable the speaker depress the feature menu select 'MORE' key **2** in Figure 3.3.2.1 successively until the display indicated in Figure 3.3.3.1 is shown.

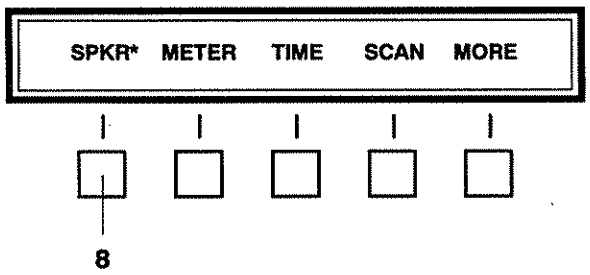

Figure 3.3.3.1 RCU-9310R Feature Menu Display.

Depress the 'SPKR' key, **8** , and the speaker will be disabled and the asterisk (*), enable function, will disappear.

NOTE: This function controls the RCU-9310R local speaker only. Therefore, it has no control over speaker in the remote receiver.

NOTE: When the RCU-9310R is turned off, or primary power is interrupted, the speaker will automatically revert to the 'ON' condition when power is restored.

3.3.4 'MHz' or 'kHz' FREQUENCY DISPLAY

The primary frequency display can be indicated in Megahertz(MHz) or Kilohertz(kHz).

Depressing the feature menu select key MORE, **1** , successively until the feature menu display is as shown in Figure 3.3.4.

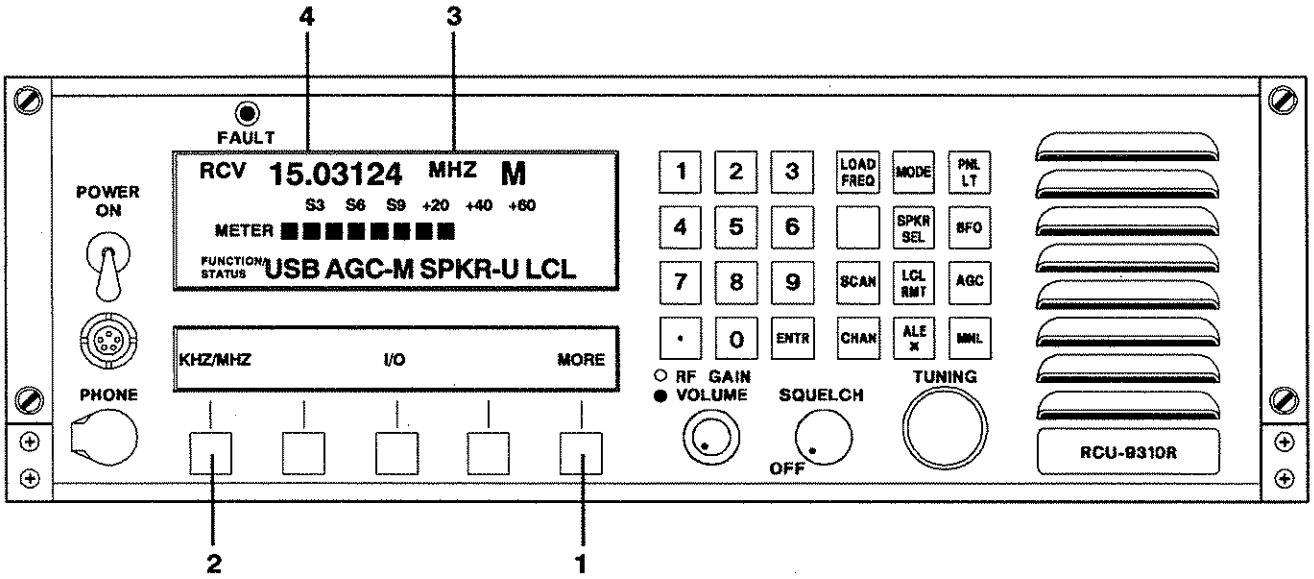

Figure 3.3.4 RCU-9310R Operational Displays.

Depressing the 'kHz/MHz' feature key **2** will toggle the operational display at **3** to read either 'MHz' or 'kHz'. Note that the decimal point **4** will move three digits to the right of the place shown in Figure 3.3.4 when the display reads in 'kHz'.

3.3.5 TIME DISPLAY

If a clock has not been installed, depression of the 'TIME' feature key will produce the message 'NO CLOCK INSTALLED' on the operational display. For equipment supplied with the clock option, the time function may be accessed by successively depressing the feature menu select key 'MORE' **1** until the feature menu display shown in Figure 3.3.5.1 appears.

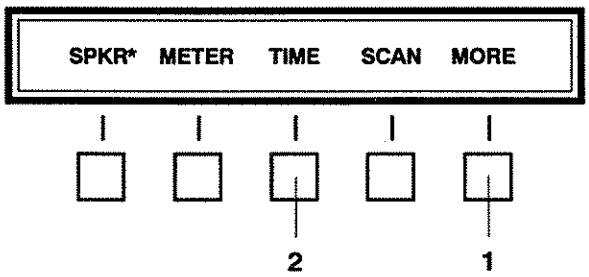

Figure 3.3.5.1 Feature Menu Display for Selection of Time.

NOTE: The clock option in the RCU-9310R Remote Control Unit is strictly a 'local' function and totally independent of the clock in the R-9200 Receiver. The two functions do not communicate in any way; i.e., the remote control unit cannot access the receiver's clock, or vice versa.

Depress 'TIME' select key **2** . Feature menu display will now appear as shown in Figure 3.3.5.2.

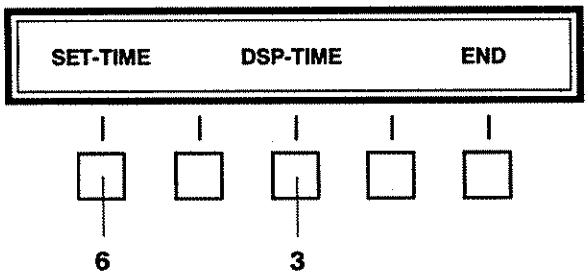

Figure 3.3.5.2 Time Display and Time Set Display.

Time can now be displayed by depressing the feature select key 'DSP-TIME'(Display Time) **3** . The presentation will appear as shown in Figure 3.3.5.3.

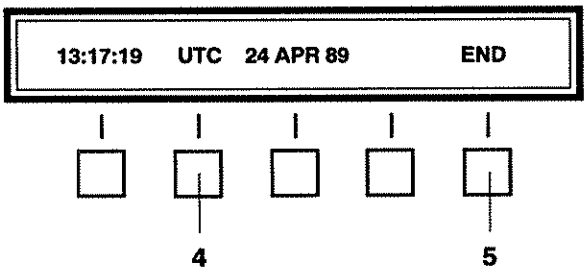

Figure 3.3.5.3 Time Display.

Other times such as 'EST'(Eastern Standard Time) and 'PST'(Pacific Standard Time) may be viewed by successive depressions of the selector key **4** .

Depression of the 'END' key **5** will cause the feature menu display to revert to that shown in Figure 3.3.5.2.

TO SET TIME:

Depress the 'SET-TIME' key **6** . The feature menu display will appear as shown in Figure 3.3.5.4.

NOTE: Use UTC Time Only.

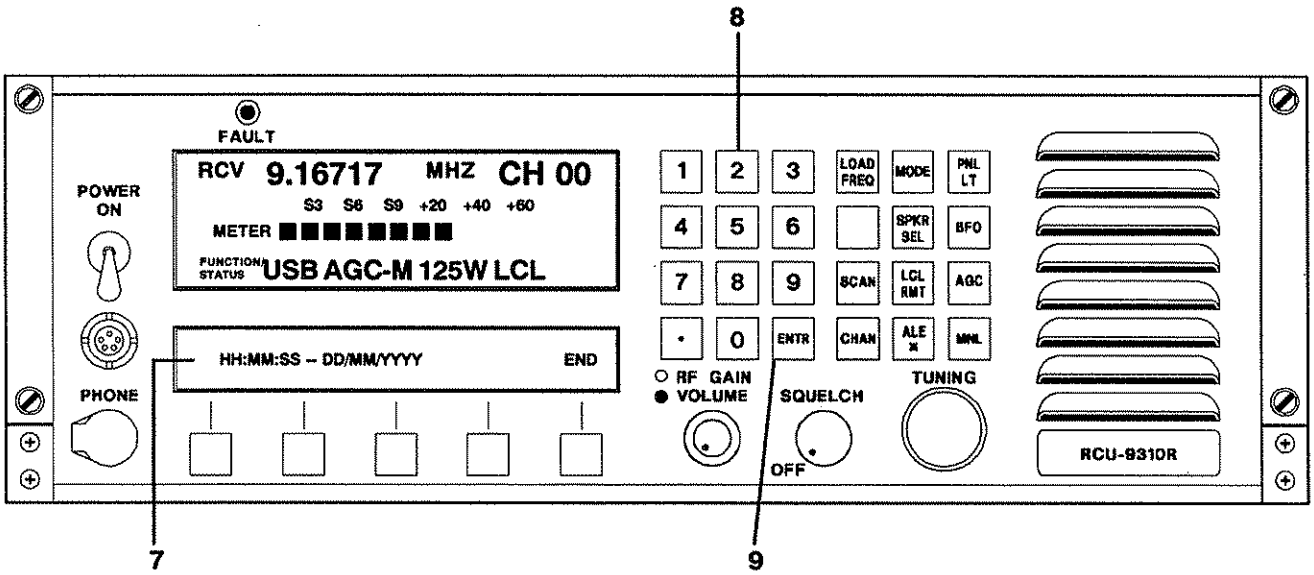

Figure 3.3.5.4 'Set-Time' Feature Menu Display.

7 The first 'H'(Hour) will flash, indicating the space in the display for numeric keyboard entry. As the first number is entered on the numeric keypad, **8** , the second space will flash, and so on, until numbers have been entered for hours, minutes, seconds—day, month, and year.

When the last digit has been entered, depress the 'ENTER' key **9** to set the clock. The feature menu display will revert to that shown in Figure 3.3.5.2. Depress the 'DSP-TIME' key **3** to display the time.

3.3.6 'I/O' PORT SET UP

This section deals with conditioning the RCU-9310R to automatically handle information, in the correct format, for external modems and/or remote lines. External connections to two I/O ports are provided by a single connector **1** on the rear panel of the remote control unit as shown in Figure 3.3.6.1.

NOTE: Although both ports use the same connector, the wiring may be split to accommodate different routing for each port.

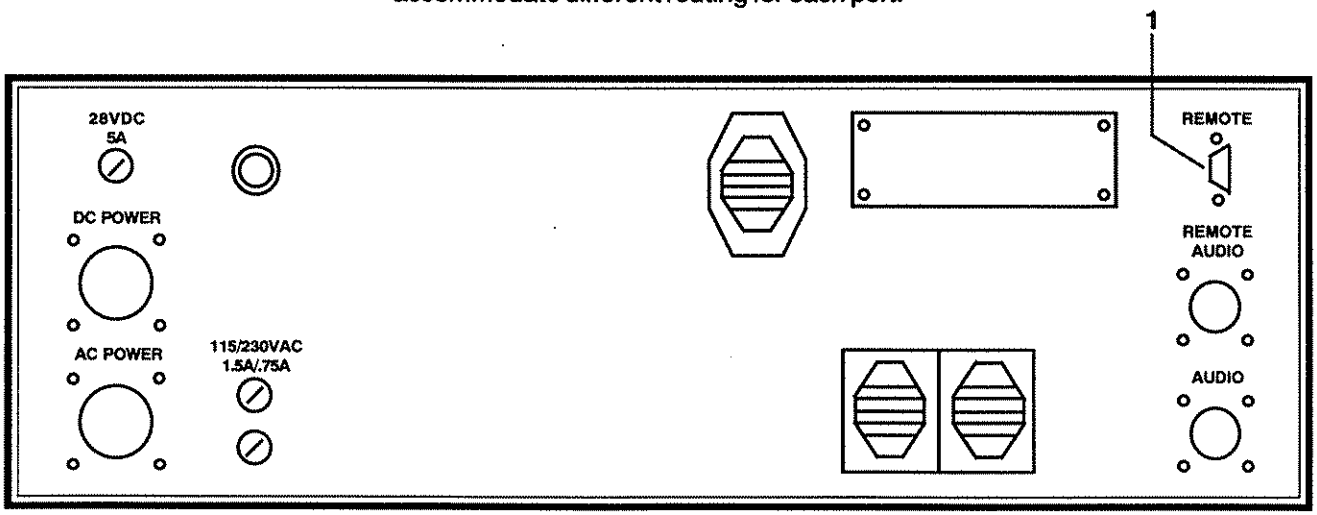

Figure 3.3.6.1 RCU-9310R I/O Port Connector.

Port B is a dedicated, RS232, 9600-baud port, to be used for future specific predetermined operations.

Port A provides the interface between the remote control unit and its companion transceiver. The interface characteristics are selectable and are determined by the requirements of the external device (in this case, the R-9200). Once the desired format is determined, port A may be conditioned by performing the following procedure.

NOTE: The following procedure configures I/O Port A in the RCU-9310R Remote Control Unit only; the corresponding port in the companion receiver must be configured locally, at the receiver control panel. The port configurations must be identical in order for the remote control unit to operate in conjunction with the receiver.

Depress the feature menu select key 'MORE', **1** , successively until the display shown in Figure 3.3.6.2 appears.

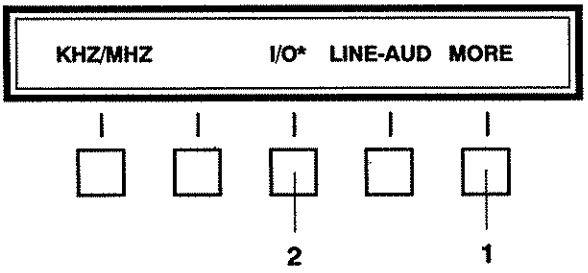

Figure 3.3.6.2 Feature Menu Display of Port A Selection.

Depress the 'I/O' (Input/Output) select key **2** . The feature display will now read as shown in Figure 3.3.6.3.

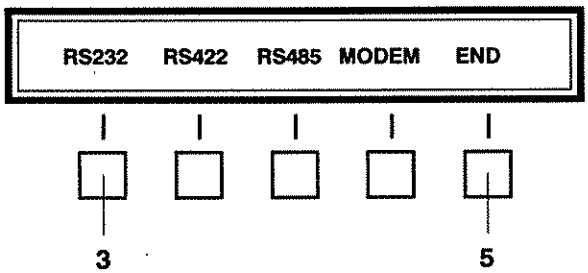

Figure 3.3.6.3 Port A Conditioning Feature Menu Display.

To select 'RS232', 'RS422', 'RS485', or 'MODEM' (FSK Tones), depress the feature select key immediately below the format desired. In this case, key **3** to select 'RS232'. The feature menu display will now appear as shown in Figure 3.3.6.4 and display the established baud rate.

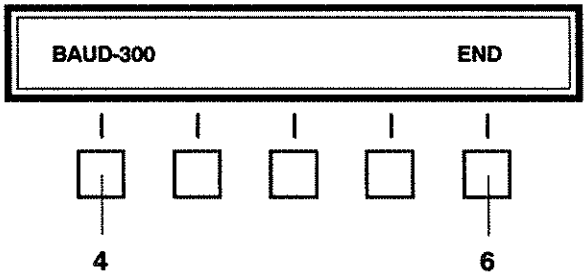

Figure 3.3.6.4 Baud Rate Display.

If a different baud rate is desired than that shown in the display in Figure 3.3.6.4, depress the feature select key **4** and other choices will appear on the display as shown in Figure 3.3.6.5.

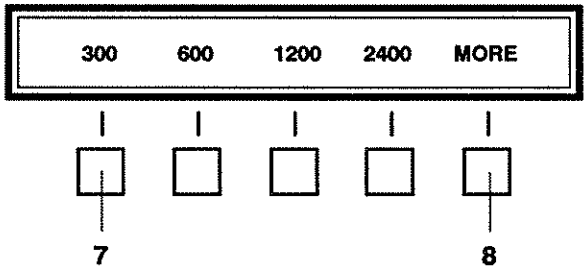

Figure 3.3.6.5 Baud Rate Selection Menu 1.

Depress the feature select Key **8** . The feature menu display will advance to that shown in Figure 3.3.6.6.

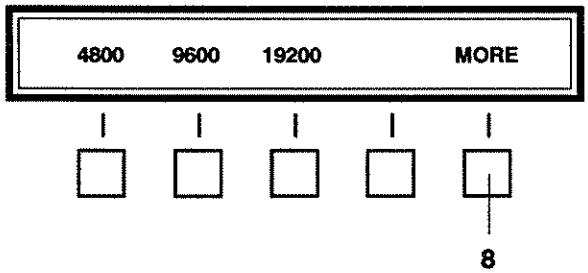

Figure 3.3.6.6 Baud Rate Selection Menu 2.

Depress the selector key immediately below the desired baud rate in Figure 3.3.6.5 or 3.3.6.6. By depressing 'MORE' Key **8** the menu will toggle between 1 and 2. If '300' Key **7** is depressed the feature menu display will immediately revert to that shown in Figure 3.3.6.4 and the newly selected baud rate will be displayed.

Depression of 'END' Key **6** in Figure 3.3.6.4 will cause the feature menu display to revert to that shown in Figure 3.3.6.3. Depression of 'END' Key **5** in Figure 3.3.6.3 will condition the I/O and feature menu display will revert to that shown in Figure 3.3.6.2.

NOTE: RS-232 operation maximum baud rate 4800
RS-422 operation maximum baud rate 19200
RS-485 operation maximum baud rate 19200
'MODEM (FSK TONES) operation baud rate is defaulted to 300.

3.3.7 ADDRESS AND SOFTWARE REVISION LEVEL

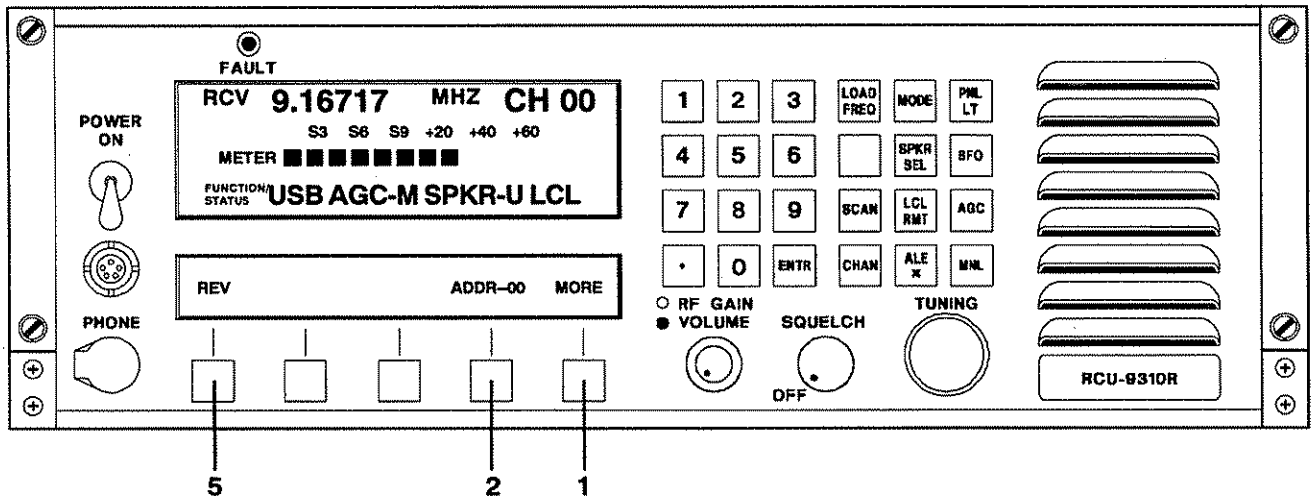

Figure 3.3.7.1 Address and Revision Level Feature Menu Display.

The RCU-9310R is capable of addressing and controlling more than one (1) R-9200 Receiver over a RS-485 control line and a switchable audio matrix. Only one R-9200 may be addressed and controlled at a time. Thus each R-9200 must have an address assigned I.E. 00 through 99 and the address of the R-9200 you wish to control entered at the RCU-9310R and the remote audio switched to the applicable R-9200.

To enter address into the RCU-9310R depress the 'MORE' Key **1** until feature menu display appears as indicated in Figure 3.3.7.1. Depress the ADDR-XX Key **2**. The feature menu display will display as shown in Figure 3.3.7.2.

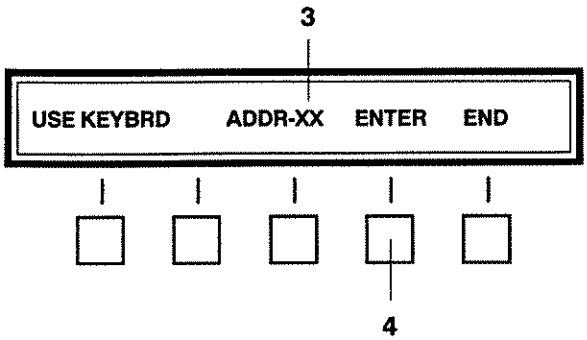

Figure 3.3.7.2 Feature Menu Display for Selection of Address.

Use keyboard to select the address, this will appear at **3** in the feature menu display. Depress the 'ENTER' Key **4** to establish new address, feature menu will revert to Figure 3.3.7.1 displaying new address.

NOTE: When only one (1) RCU-9310R is controlling one (1) R-9200, both units should be address 00.

With feature menu as displayed in Figure 3.3.7.1 depress the 'REV' Key **5** and the operational display will display at **6** REV CPU--XX IO--XX. Depress 'REV' Key **5** again or 'MORE' Key **1** to return to normal operation. This is a test of the software installed in EPROM'S. If either CPU or IO display blanks at XX, turn unit off and back on to reset CPU and check REV again. If either is still blank the appropriate EPROM is faulty.

3.3.8 'CW' FILTER

In order to invoke access to the proper feature menu, the RCU-9310R must first be put in the 'CW' mode of operation. This may be done by successively depressing the 'MODE' key until the 'CW' mode is displayed on the operational display. Once the 'CW' mode has been selected, the feature menu display will appear as shown in Figure 3.3.8.

NOTE: This only changes on the RCU-9310R. Does not affect the R-9200.

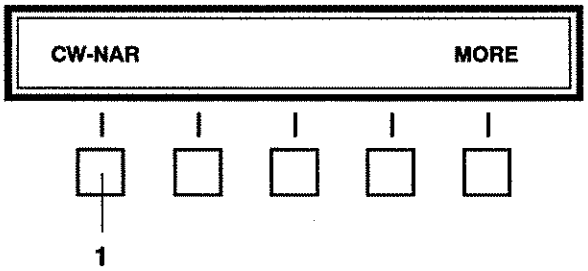

Figure 3.3.8 Feature Menu Display for Selection of 'CW' Option.

The receiver has been equipped with an audio narrow band CW filter. If this function is desired, it may be employed by depressing the 'CW-NAR'(CW-Narrow) select key **1** . An asterisk (*) will appear next to the 'CW-NAR' function to indicate that the filter is introduced into the equipment for the CW mode of operation.

NOTE: If this filter is chosen, it will automatically be utilized for <u>all</u> CW operations, independent of other menu selections.

3.3.9 LINE AUDIO SELECTION

The audio output connector at the rear of the RCU-9310R provides for two sets of 600-OHM output lines for each sideband audio (LSB-A&B, USB-C&D) to permit the utilization of more than one external audio applique unit. Through this function, a remote external device may provide receive audio from the receiver.

NOTE: Line Audio selection is strictly a local function that connects one of external audio devices to the remote control unit. It has no control of, or interaction with, the receiver's 'Line Audio' function.

Selection of external device may be made from the front panel by depressing the feature menu 'MORE' key, **1**, until the feature menu display shown in Figure 3.3.9.1 appears.

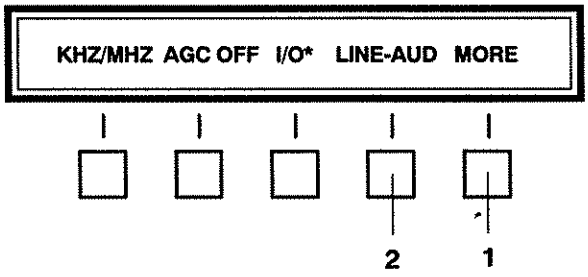

Figure 3.3.9.1 Feature Menu Display of Audio Port Selection Menu.

Depress the 'LINE-AUD' key, **2** , to display the audio selection menu shown in Figure 3.3.9.2.

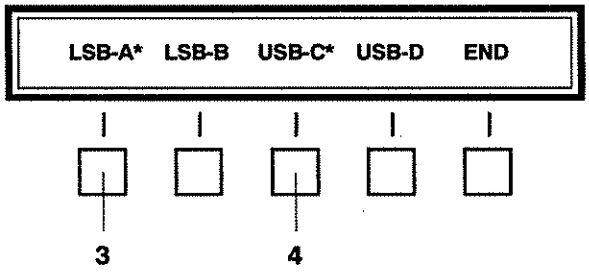

Figure 3.3.9.2 Line Audio Selection Feature Menu Display.

Depressing feature key **3** will connect the device on line A to the remote control unit. Similarly, depressing feature key **4** will connect the device on line C to the remote control unit. The asterisk (*) will appear next to the line that has been selected.

NOTE: Only one external applique unit may be connected at a time for each sideband. If only one applique is to be utilized it should be connected to line audio 'A' or 'C'.

Modem line selection for lower sideband / upper sideband (C&D) is accomplished in a like manner with appropriate feature keys.

3.4 ADVANCED OPERATIONS

This section addresses those features and functions that are specialized or invoke some of the unique features of the RCU-9310R Remote Control Unit and R-9200 Receiver as presented in Sections 3.2 and 3.3 of this manual.

3.4.1 RECEIVER SCANNING

The RCU-9310R has the ability to perform a rudimentary receiver scanning function of all pre-programmed frequencies or any block of consecutive channels between "00" and "127" stored in R-9200. Frequencies are stored in channel slots as described in Section 3.2.9 of this manual.

To scan any block of frequencies, the RCU-9310R must be in the channelized mode of operation, see Section 3.2.5. The displays will appear as shown in Figure 3.4.1.1.

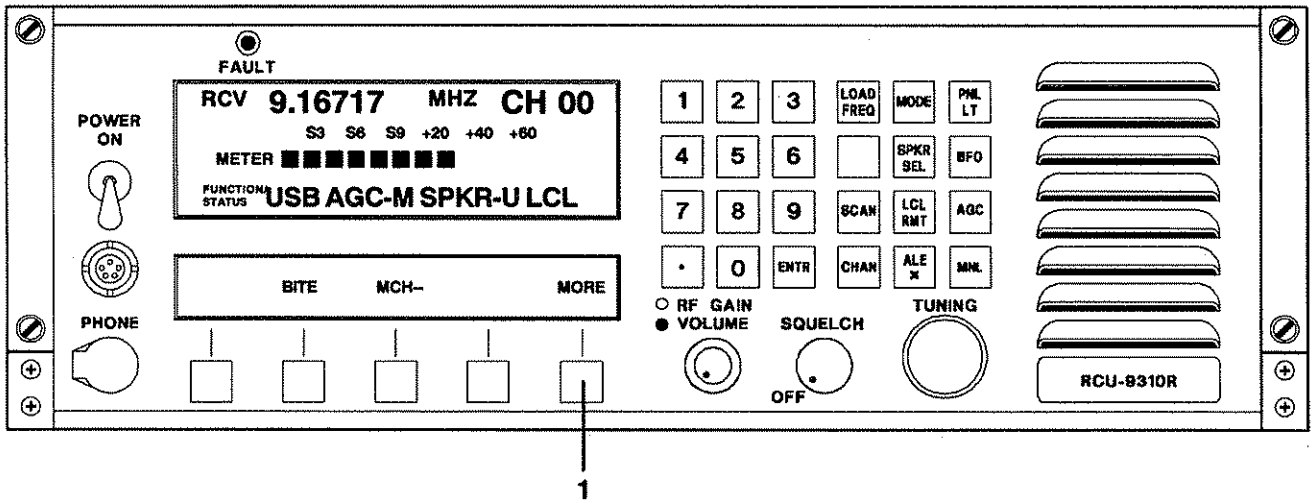

Figure 3.4.1.1 Operational Display for Channelized Mode.

Depress the feature menu select key 'MORE' **1** successively until the feature menu display appears as shown in Figure 3.4.1.2.

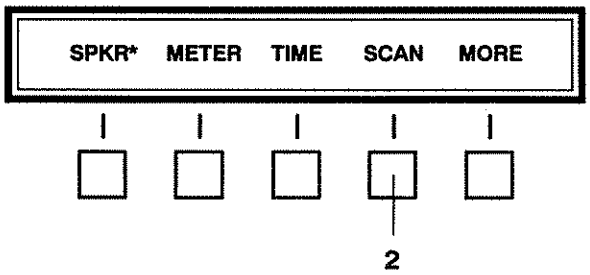

Figure 3.4.1.2 Feature Menu Display for 'SCAN' Select Key.

Depress the 'SCAN' select key **2** and the displays will appear as shown in Figure 3.4.1.3.

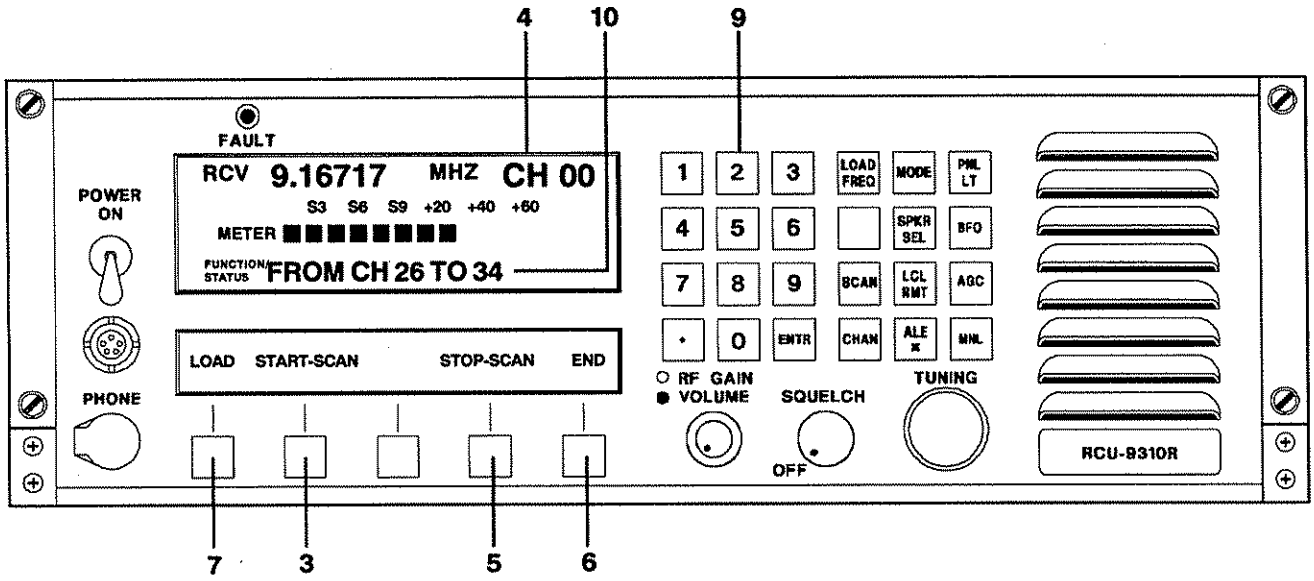

Figure 3.4.1.3 Feature Menu Display for 'SCAN' Function.

To initiate a 'SCAN' function, depress the 'START SCAN' key **3** and the channels being scanned will be shown in the operational display at **10** . To stop the scanning process, simply depress the 'STOP SCAN' key **5** . To return to normal channelized operation depress the 'END' key **6** .

NOTE: The dwell time on any given frequency has been kept to a minimum, about 2 seconds, consistent with recognizing the presence or absence of a signal in order that a relatively continuous monitoring occurs. If for some reason, longer or shorter dwell times are required, please contact Sunair for instructions on how to proceed.

To load a desired block of channels, depress the 'LOAD' key **7** . The feature menu display will appear as shown in Figure 3.4.1.4.

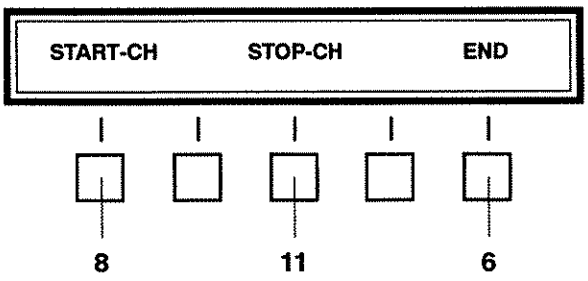

Figure 3.4.1.4 Feature Menu Display for 'SCAN LOAD' Select Key.

The operational display will briefly display the message

'USE KEY B FOR NUMBERS'

To select a new start channel, depress the 'START-CH' key **8** and enter the appropriate digits (00-127) on the numeric keypad, **9** . The newly selected start channel will be displayed on the operational display in the 'FROM CH XX TO YY' message, **10** . To select a new stop channel, depress the 'STOP-CH' key **11** and enter the appropriate digits (00-127) on the numeric keypad **9** . The newly selected stop channel will be displayed on the operational display in the 'FROM CH XX TO YY' message **10** . To terminate the loading of a new start channel and/or stop channel, depress the 'END' key **6** and the feature menu display will revert to that shown on Figure 3.4.1.3.

NOTE: When selecting a start channel or stop channel, ascertain that the start channel number is lower than the stop channel number. Otherwise, the following message will be displayed:

'START MUST BE LESS'

momentarily and a new channel must be entered either for 'START CH' or 'STOP CH'.

3.4.2 OPTIONS

If the R-9200 has any of the available options installed see applicable section(s) for the operation procedures.

3.4.2.1 LSB DATA FILTER

Depress 'MORE', key **1** until feature menu display is as shown in Figure 3.4.2.2.1.

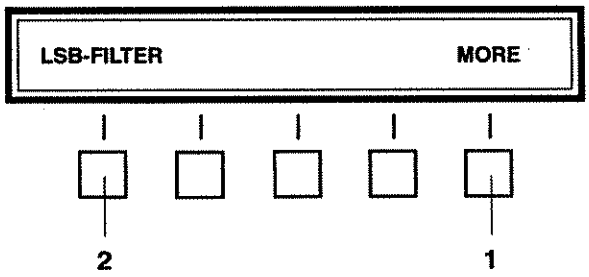

Figure 3.4.2.1.1 Feature Menu Display for LSB Filter Selection.

Depress 'LSB FILTER', key **2** . Feature menu display will appear as shown in Figure 3.4.2.1.2.

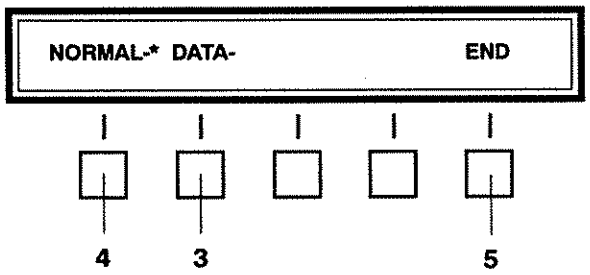

Figure 3.4.2.1.2 Feature Menu Display for LSB Filter Mode Selection.

Depressing the 'DATA' key **3** will cause an asterisk (*) to move to 'DATA' for data reception; depressing 'NORMAL', key **4** will cause an asterisk (*) to move to 'NORMAL' for voice reception. Upon mode selection, depress 'END' key **5** to return to Figure 3.4.2.1.1, depress 'MORE' key **1** to return to other menus.

3.4.2.2 USB DATA FILTER

Depress 'MORE' key **1** until the feature menu display is as shown in Figure 3.4.2.2.1. Depress 'USB FILTER' Key **2**.

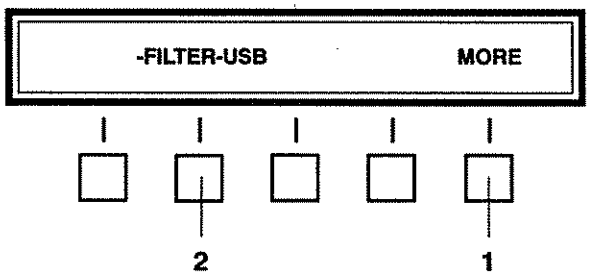

Figure 3.4.2.2.1 Feature Menu Display for USB Filter Selection.

Feature display will appear as shown in Figure 3.4.2.2.2.

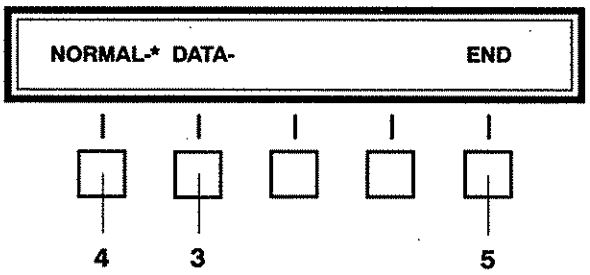

Figure 3.4.2.2.2 Feature Menu Display for USB Filter Mode Selection.

Depressing 'DATA', key **3** will cause an asterisk (*) to move to 'DATA' for data reception; depressing 'NORMAL', key **4** , will cause an asterisk (*) to move to 'NORMAL' for voice reception. Upon mode selection, depress 'END', key **5** to return to Figure 3.4.2.2.1, depress 'MORE' key **1** to return to other menus.

3.4.2.3 PRE-SELECTOR

Depress 'MORE', key **1** until feature menu display is as shown in Figure 3.4.2.3.1.

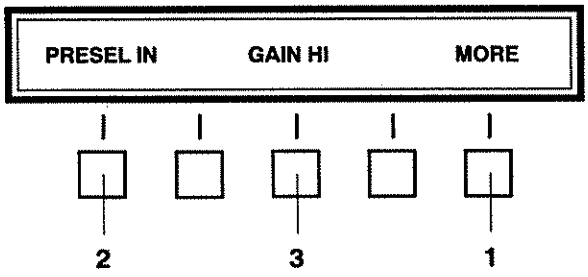

Figure 3.4.2.3.1 Feature Menu Display for Pre-selector Selection.

Depressing 'PRESEL', key **2** will toggle the feature menu display 'IN' or 'OUT' (Placing the 'Pre-selector in or out of operation). Depressing 'GAIN' key **3** will toggle the feature menu display 'HI' or 'LO' (0dB for 'HI' or -10dB for 'LO').

3.4.2.4 RADIO SECURITY

The RCU-9310R can be equipped with a security feature which, when invoked, will prevent unauthorized personnel from either viewing receiver settings (by blanking the operational display), or changing any receiver setting (by disabling the front panel controls.)

For further information contact Sunair.

THIS PAGE INTENTIONALLY LEFT BLANK.

SECTION IV

THEORY OF OPERATION

4.1 REMOTE CONTROL UNIT-RECEIVER INTERFACE AND INTERACTION

The RCU-9310R Remote Control Unit and its companion R-9200 Receiver interconnect and communicate by means of two I/O ports and two sets of audio lines. The I/O ports -- one each on the remote unit and receiver -- provide the communications path for all operational, or control, data:

a) channel number and frequency information
b) mode selection
c) receive commands
d) operator messages

I/O port connections are provided by the 'Remote' connector (J6) on the remote control unit's rear panel.

Receive audio inputs are applied, respectively, to the remote unit from the receiver over separate pairs of audio lines. The Receive Audio Input connections are provided by the 'Remote Audio' connector (J4) on the remote control unit's rear panel.

From an operational standpoint, the RCU-9310R can be viewed as a remote control panel that essentially duplicates the primary operator functions of the R-9200 Receiver. When the RCU-9310R assumes control of the receiver, the receiver's primary operator controls are inoperative. The reverse is true when the receiver has control.

Both the RCU-9310R and the R-9200 are software-controlled, microprocessor-based units, using similar devices and technology. The remote unit's software provides the control and interface capability for the front panel display, processes incoming and outgoing messages, and -- when in control -- generates functional commands to the receiver.

4.2 REMOTE CONTROL UNIT

The RCU-9310R Remote Control Unit contains the circuitry to allow the remote operator to control all of the primary functions of the R-9200 Receiver.

The major functional assemblies of the RCU-9310R Remote Control Unit are listed below and described in the following paragraphs.

(1) Front Panel Assembly 3A1
(2) CPU Assembly 3A2A1
(3) Audio/Remote Audio Assembly 3A2A2/3A2A4
(4) I/O Assembly 3A2A3
(5) AC and DC Power Supplies 3A3A1/3A3A2

Figure 4.1, the overall block diagram of the RCU-9310R, illustrates the functional relationship between these assemblies; schematic diagrams are included in Section V of this manual.

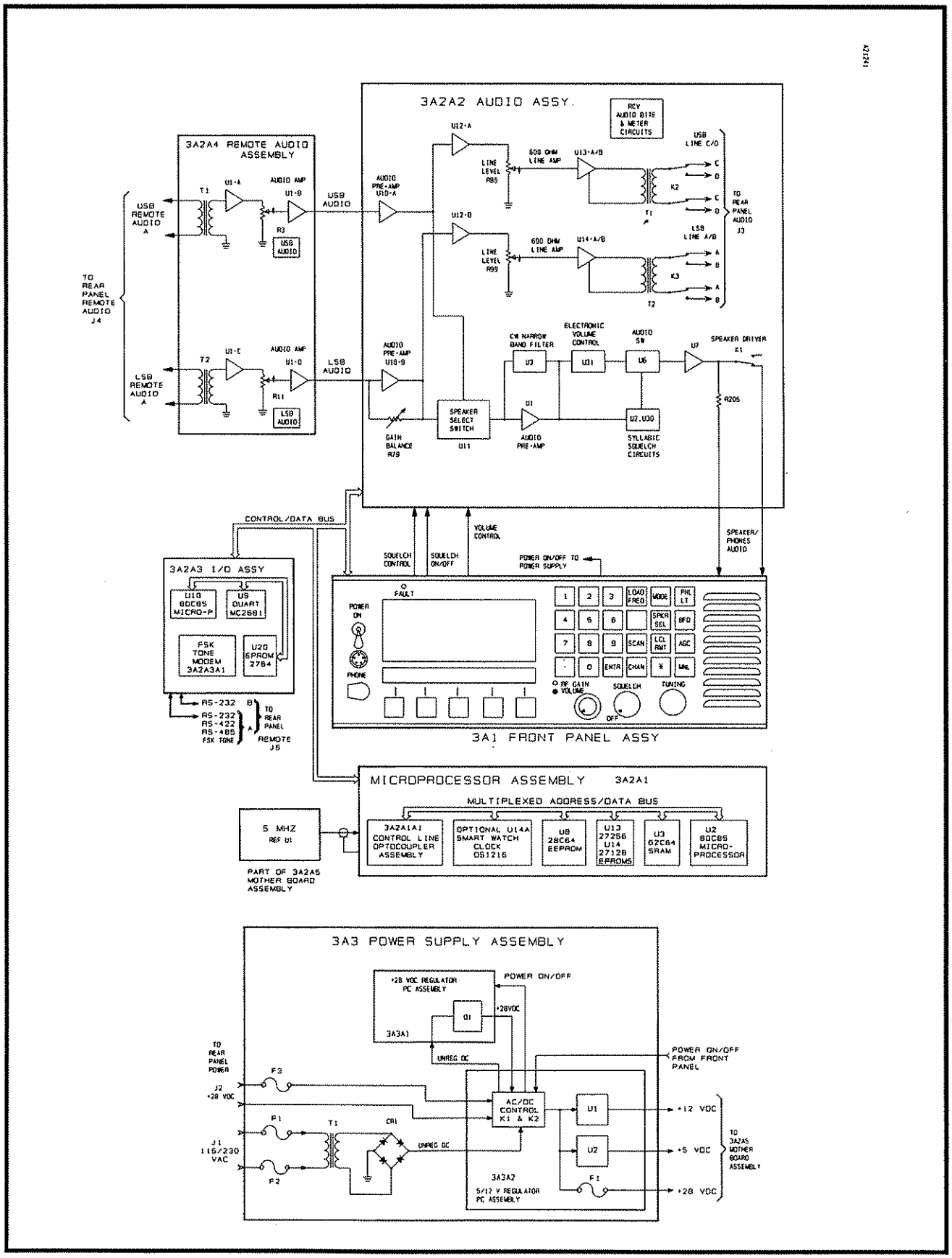

Figure 4.1 RCU-9310R Remote Control Unit Block Diagram.

4.2.1 FRONT PANEL ASSEMBLY 3A1

The front panel assembly contains the circuitry necessary to provide analog and control interfacing with the appropriate subassemblies. It also provides and accepts digital information through the control/data bus via the microprocessor assembly with the various other assemblies. A wide screen Liquid Crystal Display (LCD) indicates (Receiver) operating status such as frequency, channel, mode, BFO, AGC release time, and local/remote control as selected by a front panel keypad. The LCD contains a bar graph display which can selectively indicate receive signal strength and 600-ohm receive audio levels.

Built-In Test Equipment (BITE) monitors the status of the remote control unit's plug-in assemblies. In addition, the receiver's BITE can be activated and monitored from the remote control unit front panel. Plain language messages are displayed on the LCD, providing assurance of the continuing functionality of the remote control unit or the receiver.

Selecting the 'Local BITE' function exercises a comprehensive test routine (contained in the remote control unit's microprocessor software) that checks all plug-in subassemblies to the Lowest Repairable Unit (LRU). If a fault is detected, the 'FAULT' Light Emitting Diode (LED) in the upper left corner of the panel will light and a message on the LCD will indicate which LRU is inoperative. Similarly, selecting the 'Remote BITE' function will activate the test routines in the receiver's microprocessor software and the remote control unit LCD will monitor the testing the receiver's LRUs.

A 'soft-key' menu LCD located directly below the primary display permits the selection of several enhanced functions, such as Scan, Local and Remote BITE, Time-of-Day, etc. The soft keys also provide access to meter selection, I/O port configuration, remote audio, and speaker control.

4.2.2 CPU ASSEMBLY 3A2A1

4.2.2.1 GENERAL

The CPU Assembly provides overall control of RCU-9310R functions. It enables most Front Panel controls and status indications and executes the RCU-9310R's internal BITE routines. When the RCU-9310R assumes control of receiver operations, the microprocessor provides message control and generates commands to the receiver. These commands are decoded by the receiver to execute the appropriate (receiver) software routines and perform the designated function(s).

Communications between the Microprocessor Assembly and the other major functional assemblies are provided by the control/data bus.

4.2.2.2 MICROPROCESSOR U2

The 8-bit 80C85 microprocessor, U2, is the primary control for all RCU-9310R functions. It executes the instructions (software) stored in EPROM U13/14. U2 controls and communicates with the other circuits on the CPU Assembly by means of a multiplexed address/data bus.

4.2.2.3 ERASABLE PROGRAMMABLE READ-ONLY MEMORY (EPROM) U13 and U14

The EPROM's, U13 and U14 store the program(s) or software executed by the microprocessor U2 to control the RCU-9310R functions.

4.2.2.4 ELECTRICALLY ERASABLE PROGRAMMABLE READ ONLY MEMORY (EEPROM) U8

Long term storage of the RCU-9310R functions is handled by the non-volatile memory in U8. The I/O functions, address and if installed the clock functions are placed in U8 to be used by U2 during the execution of its program with U13/14. U8 is an 8K X 8 bit CMOS EEPROM in which each byte may be reliably written 10,000 times without degrading device operation. The data in the byte will remain valid after its last write operation for ten years with or without power applied.

4.2.2.5 STATIC RANDOM ACCESS MEMORY (SRAM) U3

The SRAM provides temporary storage that is used as a "scratch pad" by microprocessor U2 during the execution of its program with U13/14.

4.2.2.6 OPTIONAL SMART WATCH U14(A)

Smart Watch is an optional device that is "piggy-backed" into socket U14. It keeps track of: hundreths of seconds, seconds, minutes, hours, days of the week, days of the month, months, and years. An embedded lithium energy cell maintains time information when the equipment is turned off. The above information is available to microprocessor U2 for selective display on the Front Panel LCD as time-of-day clock.

NOTE: The Smart Watch in the remote control unit is completely independent of the Smart Watch in the receiver.

4.2.3 OPTOCOUPLER ASSEMBLY 3A2A1A1

The Optocoupler, a subassembly that plugs onto the CPU Assembly, contains optically-coupled isolators. The Optocoupler electronically isolates the CPU's multiplexed address/data bus from the control/data bus to prevent noise transfer to/from the microprocessor (U2).

4.2.4 AUDIO/REMOTE AUDIO ASSEMBLIES 3A2A2/3A2A4

The Audio/Remote Audio Assemblies process the Remote Receive Audio input signal from the receiver to drive the front panel speaker, headphones, and to provide four selectable 600-ohm audio outputs to external modems.

After converting the receive 600 ohm audio to single ended output in the Remote Audio Assembly, the Receive Audio signal is amplified and routed to the 600-ohm line drivers to provide a balanced 600-ohm output to the connected external device (A and B or C and D as determined by the 'Line Audio' selection described in Section 3.3.9). The amplified input signal can be electronically switched through a CW Narrowband Audio Filter or bypassed-switched to the Syllabic Squelch and Electronic Volume Control circuits. The output of the Electronic Volume Control is amplified and switched (controlled by a designed-in Mute function or Squelch ON/OFF) and routed to the Speaker Driver. The output is dropped through R205 and routed to the front panel for headphone audio. Full power audio is routed through an energized relay (K1) to the front panel speaker.

NOTE: When headphones are plugged into the front panel, relay K1 is de-energized, disabling the audio to the speaker.

The Squelch circuit is a true syllabic type that operates on voice characteristics and rejects other types of received audio, such as noise, data, etc. The Receive Audio input is sampled in the Syllabic Squelch circuit and -- if it has voice characteristics -- turns on the Receive Audio switch and passes through to the Speaker Driver. The Syllabic Squelch circuit is designed to remain inactive (i.e., audio unsquelched) during voice pauses or short fades, minimizing the effects of nuisance interruptions.

NOTE: This is a function in the RCU-9310R and does not put the remote receiver into squelch operation.

4.2.5 I/O ASSEMBLY 3A2A3

The I/O Assembly contains two independent I/O ports, designated 'A' and 'B'. Port B is an RS-232, 9600 baud port that is dedicated to be used for future predetermined operations. Port A provides the control interface between the remote control unit and its companion receiver. This port is configurable from the control panel for RS-232, RS-422, or RS-485 formats at speeds of 300, 600, 1200, 2400, 4800, 9600, 19200 baud or FSK tones at 300 baud only.

NOTE: Port A may be used for communications over telephone lines with the FSK Tone Modem (3A2A3A1).

I/O Port functions are implemented by a Dual Universal Asynchronous Receiver/Transmitter (DUART) circuit (U9) under control of the I/O Assembly's microprocessor (U10). The I/O Assembly microprocessor executes special instructions (software) contained in EPROM U20 in response to messages from the receiver or commands from the Front Panel or Microprocessor Assembly.

The organization of the I/O Assembly hardware and software is such that both ports can be active simultaneously.

4.2.6 POWER SUPPLY ASSEMBLIES 3A3, 3A3A1, and 3A3A2

The RCU-9310R operates from either a +26 VDC or 120/220 VAC power source. When both power sources are connected, the RCU-9310R operates from the AC line input, using the +26 VDC input as a backup power source. The supply will sense AC line reductions or failure and automatically switch to the backup voltage source.

The AC power supply assembly (3A3) produces unregulated DC that is regulated to +28 VDC in PC assembly 3A3A1. This +28 VDC is routed to PC assembly 3A3A2 where the +28 VDC is fuse (3A3A2 F1) protected before being routed to the circuitry in the RCU-9310R. The +28 VDC is also sent thru R1 and R2 to 3A3A2 U1 to produce the +12 VDC regulated output routed to RCU-9310R circuitry and to 3A3A2 U2 producing the +5 VDC regulated output for the RCU-9310R circuitry.

THIS PAGE INTENTIONALLY LEFT BLANK.

SECTION V

FAULT ISOLATION/MAINTENANCE AND REPAIR

5.1 GENERAL

This section provides the procedures for Fault Isolation, maintenance and repair to the Lowest Repairable Unit (LRU) level.

5.2 DISASSEMBLY

Disassembly should be only to the extent necessary to accomplish the repair or replacement of the defective LRU. Procedures for the disassembly of major modules and assemblies are given in the following paragraph.

5.2.1 TOP OR BOTTOM COVER REMOVAL

Refer to Figure 5.2.1.1

a) Remove the three screws at the rear of the cover.

b) Pull the cover up and back from the front panel.

5.3 TEST SET-UP

5.3.1 PRELIMINARY

a) Connect RCU-9310R to AC or DC power and turn ON.

WARNING: For personal safety and to prevent damage to voltage sensitive components in the remote control unit, always turn OFF the RCU-9310 whenever reseating printed circuit cards (PC), LRUs and when replacing fuses.

5.4 BITE

5.4.1 PRELIMINARY

The BITE of the RCU-9310R provides immediate LRU faults. The Surveillance BITE is controlled by the microprocessor on CPU Assembly 3A2A1. It checks the operational status of the LRUs with the exception of the +28 V Regulator 3A3A1. This LRU has a self-surveillance BITE non-dependent upon CPU Assembly 3A2A1. The front panel "LCD" will display a plain language "FAULT MESSAGE", the "FAULT" Red LED will illuminate on the front panel (See Figure 5.4.1.1 and on the faulty LRU (see Figure 5.4.1.3). The RCU-9310R Remote Control Unit can be tested independently, with or without a receiver connected. With RCU-9310R connected to selected input power turn ON remote unit and refer to figure 5.4.1.1 and perform the following steps to access the BITE menu.

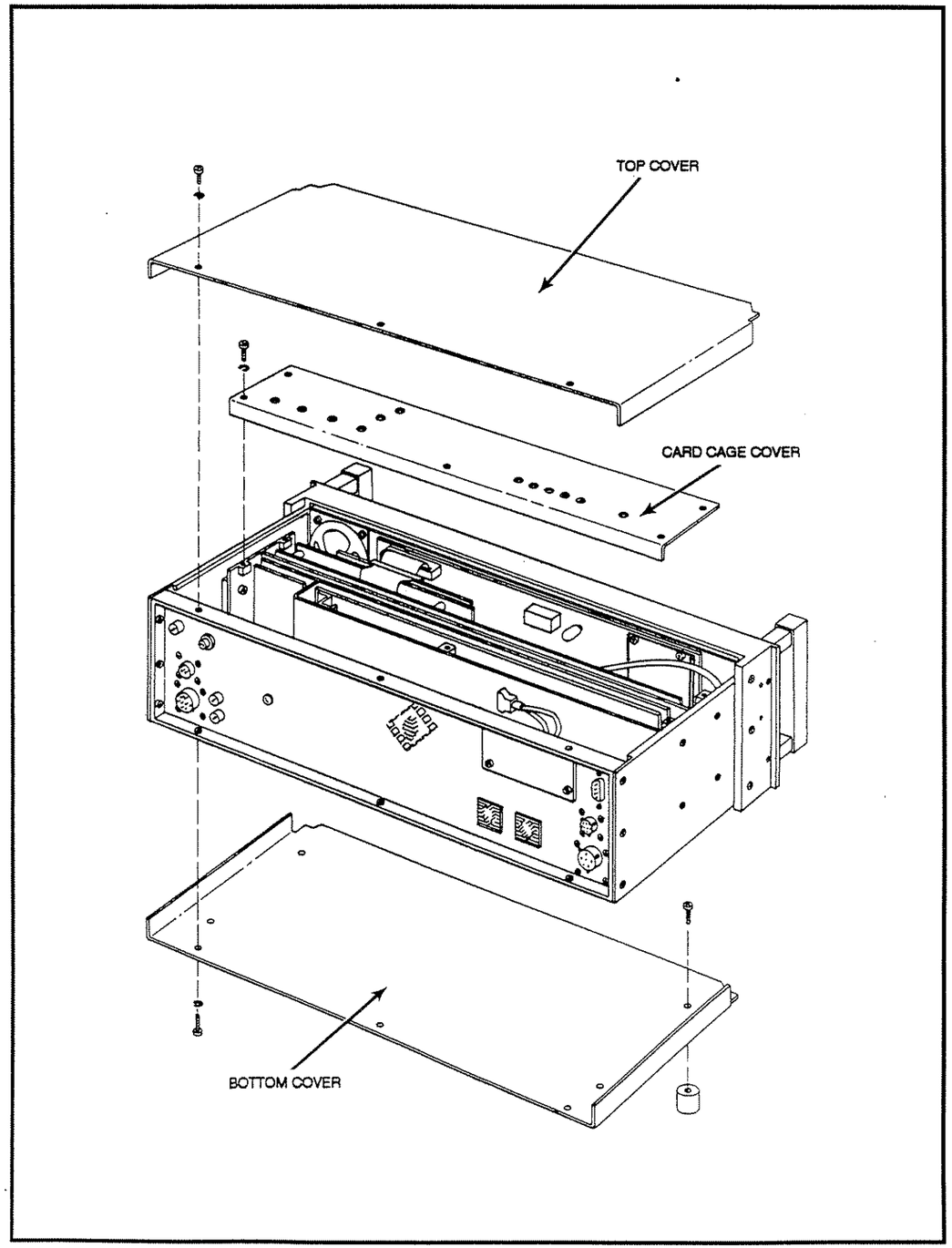

Figure 5.2.1.1 Top/Bottom and Card Cage Covers Removal.

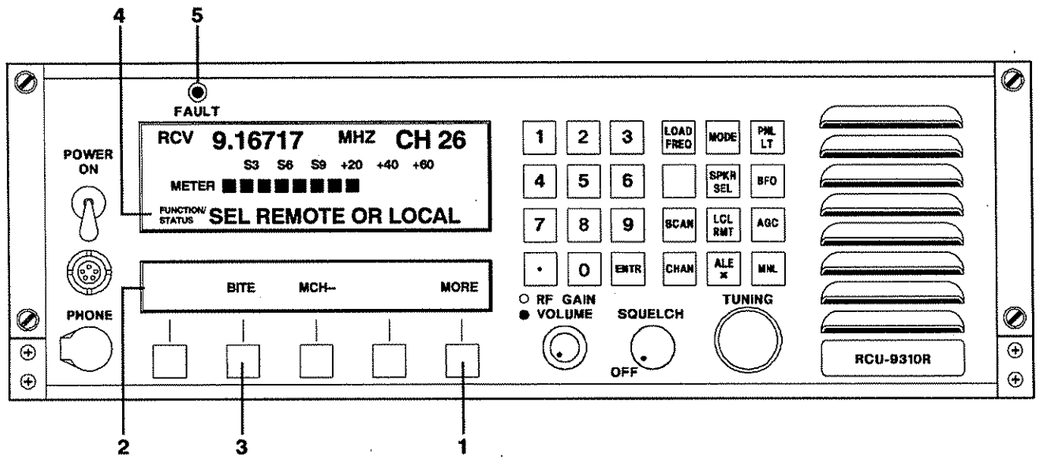

Figure 5.4.1.1 RCU-9310R Feature Menu, BITE Selection.

Depress the 'MORE' key **1** successively until the feature menu display **2** shown in Figure 5.4.1.2 appears.

Depress the 'BITE' key **3** . The message:

'SEL REMOTE OR LOCAL'

will appear on the operational display **4** , and the BITE submenu shown in Figure 5.4.1.2 will be displayed on the feature menu display.

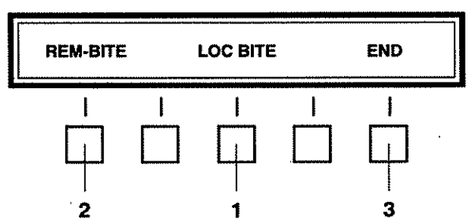

Figure 5.4.1.2 RCU-9310R BITE Submenu.

Depress the 'LOC BITE' key **1** . The RCU-9310R will initiate a self-test routine and will display messages and/or results on the operational display. The initial message will be:

'BITE IN PROGRESS'

As each module is tested, a corresponding message will appear briefly on the operational display in the following order:

'FRONT PANEL O.K.'

'CPU O.K.'

'POWER SUPPLY O.K.'

'I/O O.K.'

1000 Hz Audio Tone heard in speaker at this point.

'AUDIO O.K.'

If any of the modules (LRUs) are faulty, the BITE program will halt, the front panel 'FAULT' indicator **5** will light, and the operational display will display a message indicating the faulty module:

'FRONT PANEL FAULT'

'CPU FAULT'

'POWER SUPPLY FAULT'

'I/O FAULT'

'AUDIO FAULT'

5.4.2 COMMON MODULES

NOTE: Refer to Figures 2.1.1, 5.4.2.1 and 5.4.2.2 for module cover removal and assembly locations.

5.4.2.1 FRONT PANEL FAULT

This is an indication of a failure on the Front Panel PC Board Assembly 3A1A1.

a) Turn RCU-9310R OFF and remove Front Panel Module 3A1. See Figure 5.4.2.2 on the following page.

b) Remove and replace Front Panel PC Board Assembly 3A1A1. See Figure 5.4.2.2.

c) Reinstall Front Panel Module 3A1. Turn RCU-9310R ON.

d) Repeat 'BITE TEST'. Upon completion of successful test, return RCU-9310R to operational status and return failed 3A1A1 PC to factory for repair.

e) If in step d) above, test fails the Front Panel test again, turn OFF RCU-9310R and remove 3A1 Module; replace with original 3A1A1 PC Assembly. Return the failed 3A1 Module to factory for repair.

5.4.2.2 CPU FAULT

This is an indication of a failure on the PC Assembly CPU 3A2A1. Check position of DIP Switch S1. (See Figure 5.8.4)

a) Turn the RCU-9310R OFF and remove and replace PC Assembly 3A2A1. See Figures 5.2.1.1, 5.4.2.1, and 5.4.2.2 thru 5.4.2.4.

b) Turn ON RCU-9310R and repeat 'BITE TEST'. Upon completion of a successful test, return RCU-9310R to operational status.

c) Return failed PC Assembly 3A2A1 to factory for repair.

5.4.2.3 I/O FAULT

This is an indication of a failure on PC Assembly I/O 3A2A3.

a) Turn the RCU-9310R OFF and remove and replace PC Assembly 3A2A3. See Figures 5.2.1.1, 5.4.2.1 and 5.4.2.2 thru 5.4.2.4.

b) Turn ON RCU-9310R and repeat 'BITE TEST'. Upon completion of a successful test return RCU-9310R to operational status.

c) Return failed PC Assembly 3A2A3 to factory for repair.

5.4.2.4 AUDIO FAULT

This is an indication of a failure on the Audio PC Board Assembly 3A2A2. See Figure 5.8.6.

a) Turn RCU-9310R OFF and remove and replace 3A2A2. See Figures 5.2.1.1 and 5.4.2.1.

b) Turn RCU-9310R ON. Repeat 'BITE TEST' Upon completion of successful test, return RCU-9310R to operational status. Return failed 3A2A2 to factory for repair.

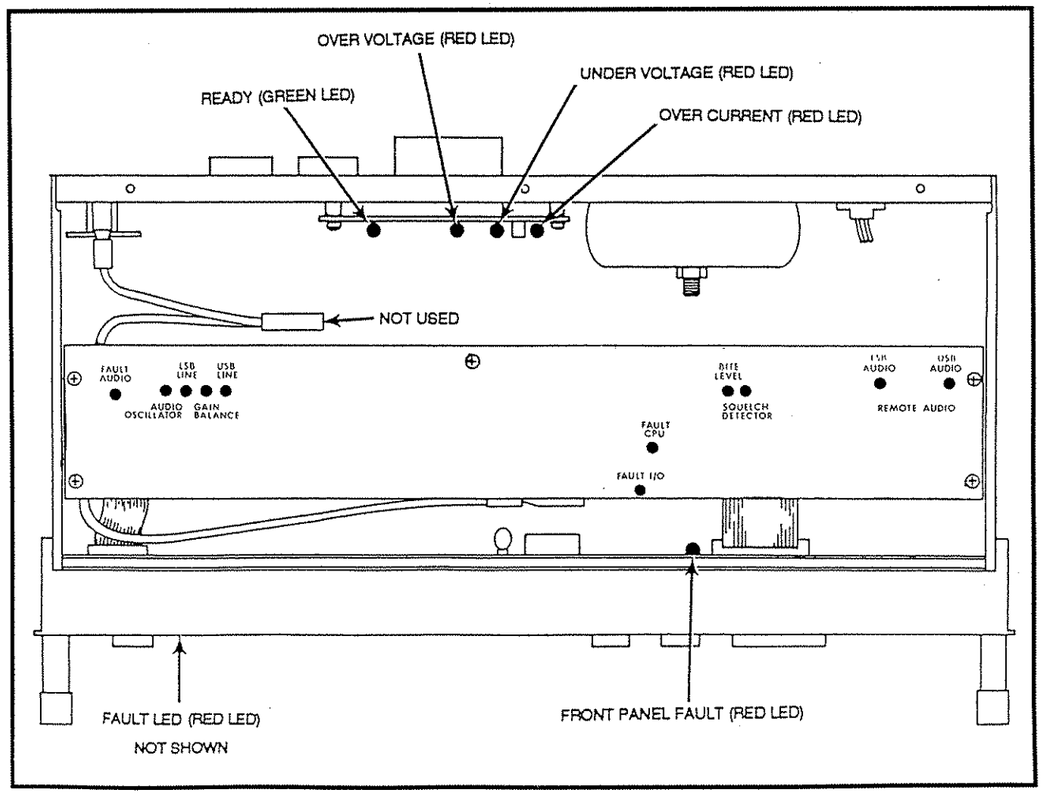

Figure 5.4.1.3 Top View RCU-9310R LRU 'Fault Indicators'.

5.4.2.5 POWER SUPPLY FAULT

This indicates a failure of the +28VDC out of PC Assembly 3A3A2 usually 3A3A2-F1

a) Turn OFF RCU-9310R and check 3A3A2-F1, replace as required.

b) If 3A3A2-F1 is not blown, use normal troubleshooting procedures and check the +28VDC lines on Mother Board assembly 3A2A5-J2 pins 23 and 24. If this is correct, the fault is on the CPU assembly 3A2A1.

1) Turn RCU-9310R Off and remove and replace PC assembly 3A2A1. See Figures 5.2.1.1, 5.4.2.1 and 5.4.2.2 thru 5.4.2.4.

2) Turn ON RCU-9310R and repeat 'BITE TEST'. Upon completion of a successful test, return RCU-9310R to operational status.

3) Return failed PC Assembly 3A2A1 to factory for repair.

5.5 TROUBLESHOOTING WITH SELF-SURVEILLANCE BITE

Refer to Figure 5.4.1.3.

5.5.1 AC POWER SUPPLY

The Self-Surveillance Bite for the AC power supply consists of the following LEDs (See Figure 5.4.1.3)

a) GREEN = READY (3A3A1-CR8)

b) RED = OVER VOLTAGE (3A3A1-CR7)

c) RED = UNDER VOLTAGE (3A3A1-CR6)

d) RED = OVER CURRENT (3A3A1-CR3)

TROUBLESHOOTING GUIDE.

SYMPTOM(s)	POSSIBLE TROUBLE(s)	CHECKS & CORRECTIVE ACTION(s)
AC POWER ONLY:		
Unable to turn unit ON. No LEDs lit on 3A3A1.	1. No AC Power. 2. Open AC fuses 3A3F1 or F2.	1. Check AC power input and take appropriate action. 2. Replace F1 or F2. If fuse opens again use normal trouble-shooting procedures, locate and repair short in AC power supply.

TROUBLESHOOTING GUIDE (CONT...)

SYMPTOM(s)	POSSIBLE TROUBLE(s)	CHECKS & CORRECTIVE ACTION(s)
Unable to turn unit ON and GREEN READY LED on 3A3A1 lit.	1. 3A3A2-K2 or associated circuitry 3A3A2-Q2 or Q3 faulty.	1. Troubleshoot and repair or replace faulty component. 2. Remove and replace PC Assembly 3A3A2.
Unable to turn unit ON and RED UNDER VOLTAGE LED on 3A3A1 lit.	1. 3A3A1-Q1 faulty. 2. Faulty component(s) on 3A3A1.	1. Replace Q1. 2. Troubleshoot and replace faulty components, or remove and replace PC Assembly 3A3A1.
AC or DC POWER:		
Unit turns ON, unable to turn ON Front Panel LCD backlight. Run local BITE. Unit displays 'POWER SUPPLY FAULT'. No audio tone during audio test and displays 'AUDIO FAULT' and Front Panel FAULT LED is lit.	1. 3A3A2-F1 open.	1. Replace F1, if fuse opens again use normal troubleshooting procedures, locate and repair short on +28UDC lines in unit.
Unit turns on, Front Panel LCD glows, but no information is displayed. Unit has no RED FAULT LEDs lit. GREEN READY LED on 3A3A1 is lit.	1. 3A3A2-U1 or associated circuitry faulty.	1. Replace U1. 2. Troubleshoot and replace faulty components or remove and replace PC Assembly 3A3A2.
Unit turns on, Front Panel LCD glows, but no information is displayed. Unit has no RED FAULT LEDs lit. With AC power applied GREEN READY LED ON 3A3A1 is lit. With DC only READY LED will not be lit.	1. 3A3A2-U2 or associated circuitry faulty.	1. Replace U2. 2. Troubleshoot and replace faulty components or remove and replace 3A3A2.
DC POWER ONLY:		
Unable to turn unit on.	1. No DC power. 2. 3A3A-F3 open. 3. 3A3A2-K1, K2 or associated circuitry faulty.	1. Check DC power input and take appropriate action. 2. Replace F3, if fuse opens again, use normal troubleshooting procedures, locate and repair short in DC circuitry. 3. Troubleshoot and replace faulty component(s) or remove and replace PC Assembly 3A3A2.

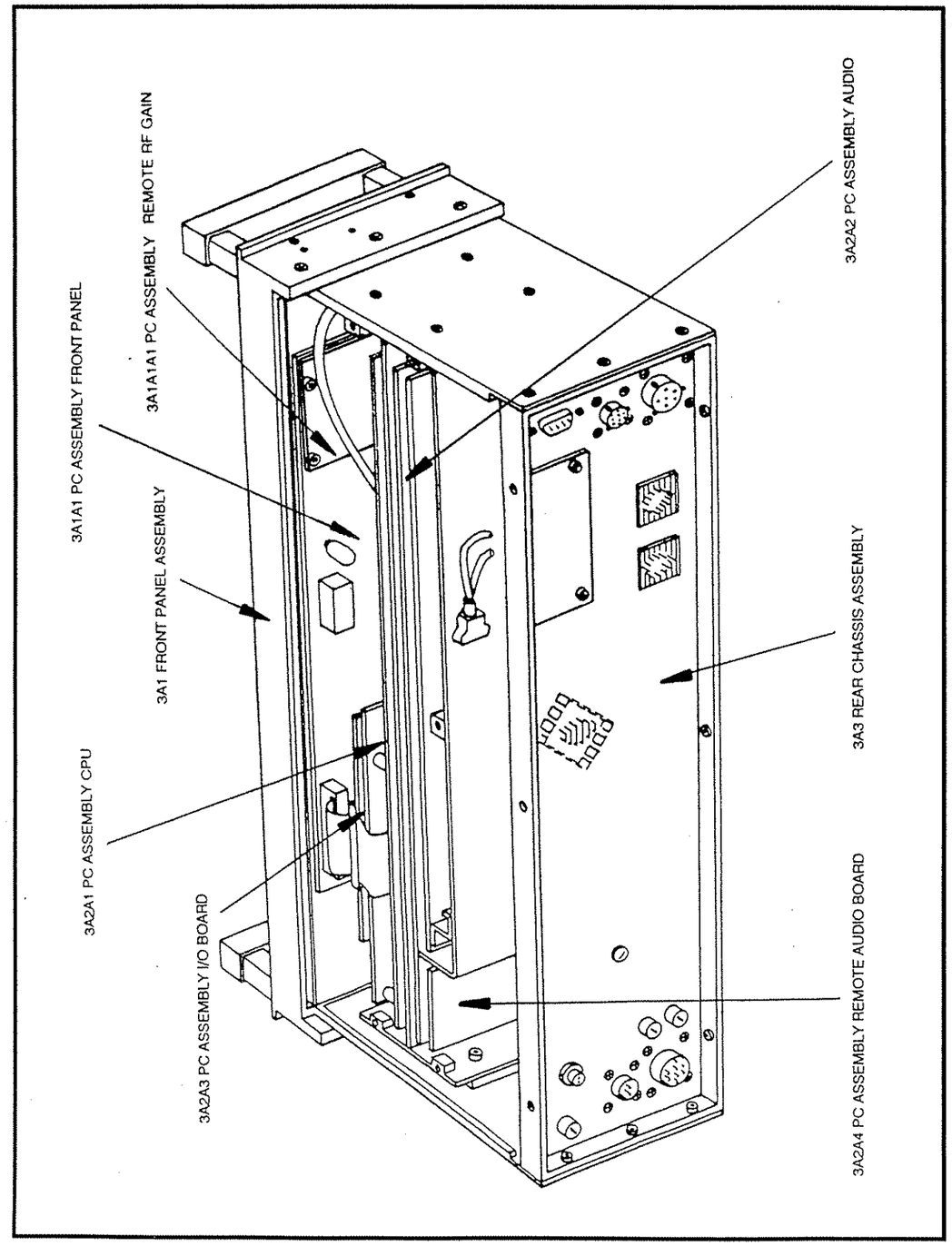

Figure 5.4.2.1 Major Assembly Locations.

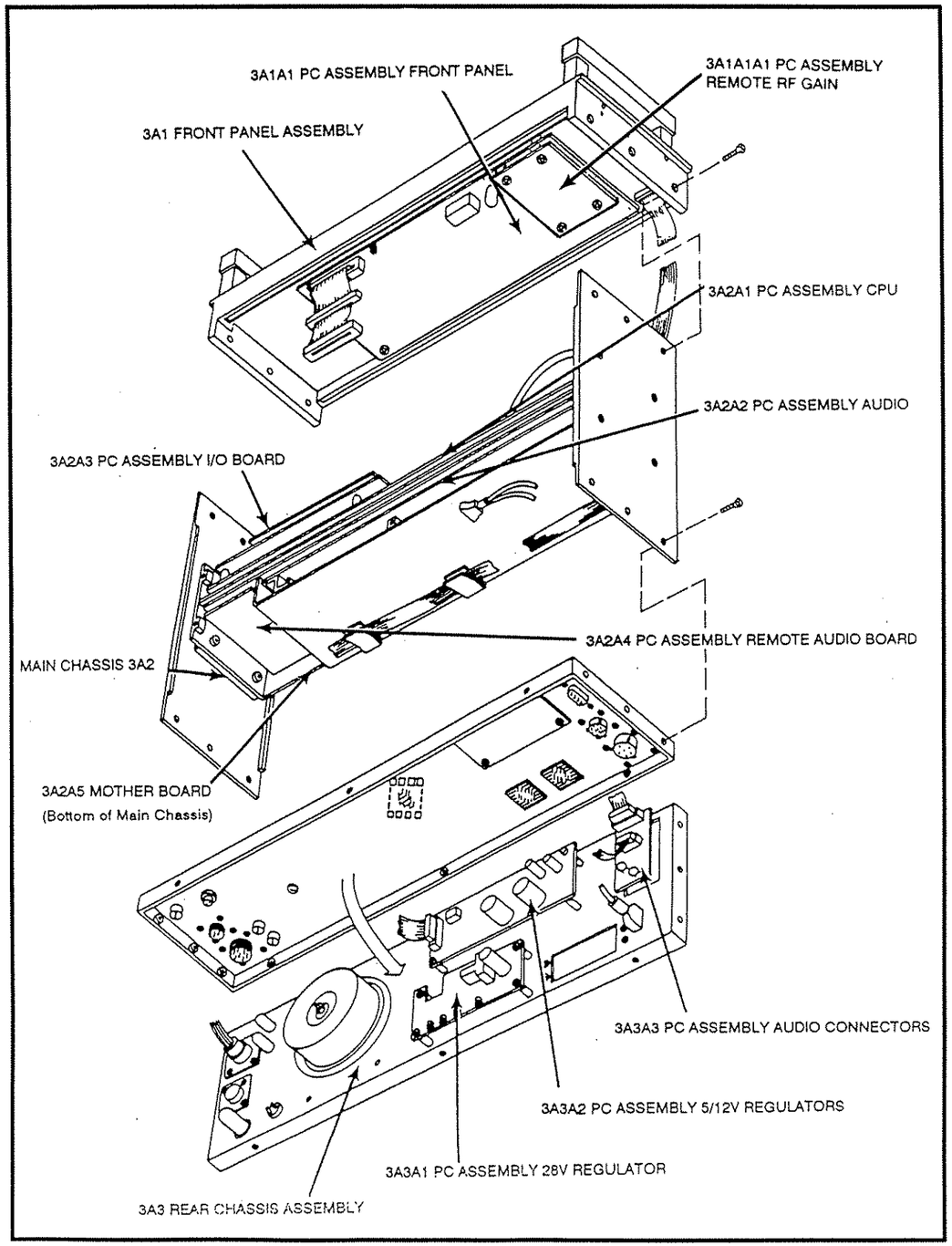

Figure 5.4.2.2 Removal of Front and Rear Panel and Major Assemblies Locations.

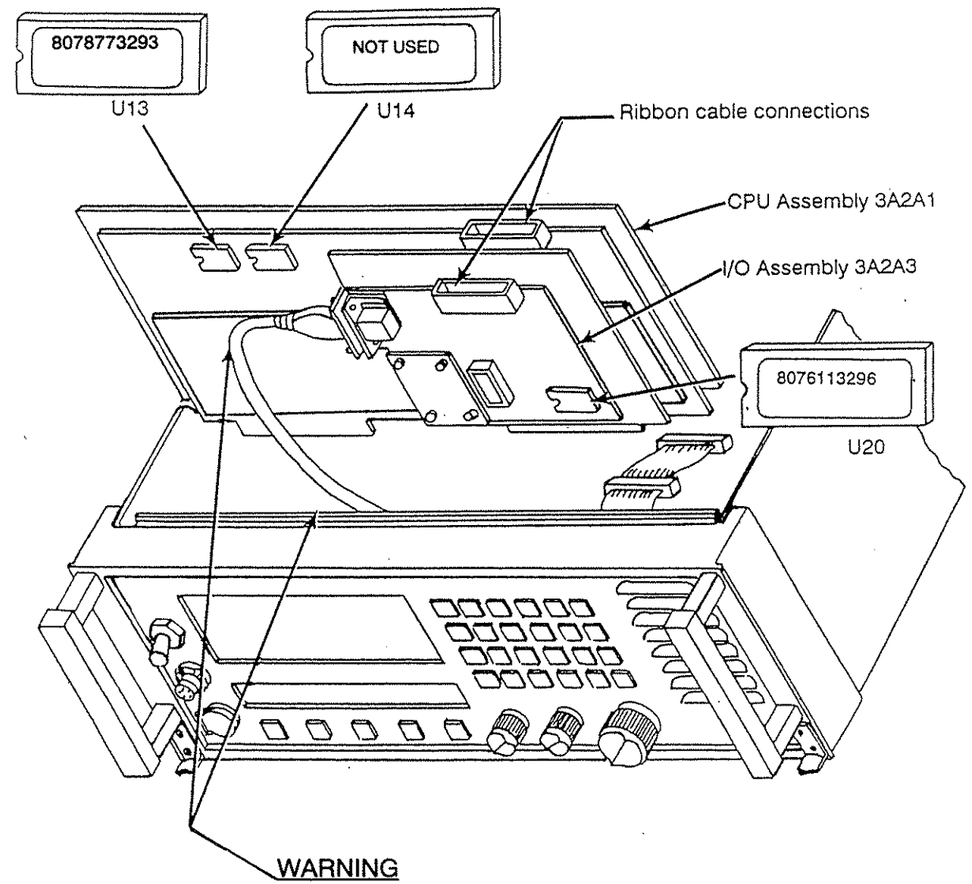

Make sure I/O cable doesn't catch on the black transformer located on the Front Panel as the CPU Assembly is removed and replaced.

Figure 5.4.2.3 Removal/Replacement of CPU 3A2A1, I/O 3A2A3.

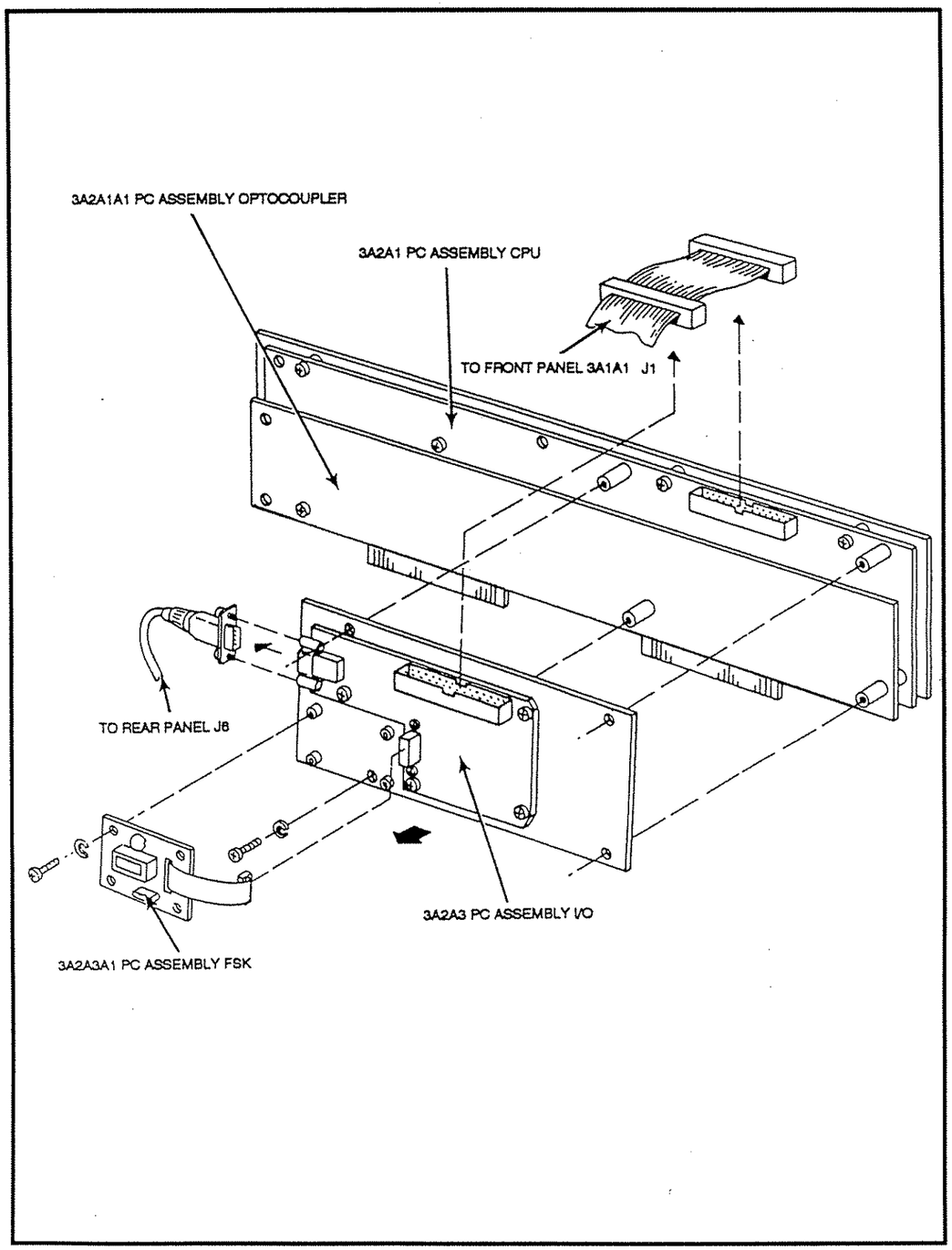

Figure 5.4.2.4 Removal/Replacement of I/O 3A2A3 or FSK 3A2A3A1.

5.5.2 INSTALLATION OF NEW BACKLIGHTING DEVICES FOR FRONT PANEL LCDs.

The Backlighting devices for the two (2) Front Panel LCDs P/N 8076041708 and P/N 8076040809 will gradually lose their luminescence with time. For this reason operating personnel should turn ÔFF the panel light whenever it is not needed to give the Backlighting devices the longest possible life. This is accomplished by depressing the 'PNLLT' push button on the Front Panel to turn OFF the Backlighting and depressing it again to turn the Backlighting ON again when needed. Once the Backlighting devices have lost their luminescence, the backlight may be renewed by ordering replacement Backlighting devices for the applicable LCD and installing per Figures 5.5.2.1 through 5.5.2.3.

1. Custom LCD, Full Function, P/N 8076040604.
   Replacement Backlight, P/N 8076040809.

2. Custom LCD, 1 x 40 Character, P/N 8076041601.
   Replacement Backlight, P/N 8076041708.

NOTE: Once the Backlights have been replaced initially, they can be replaced again as needed. When the luminescence has decreased remove the installed Backlight and insert a new one in its place.

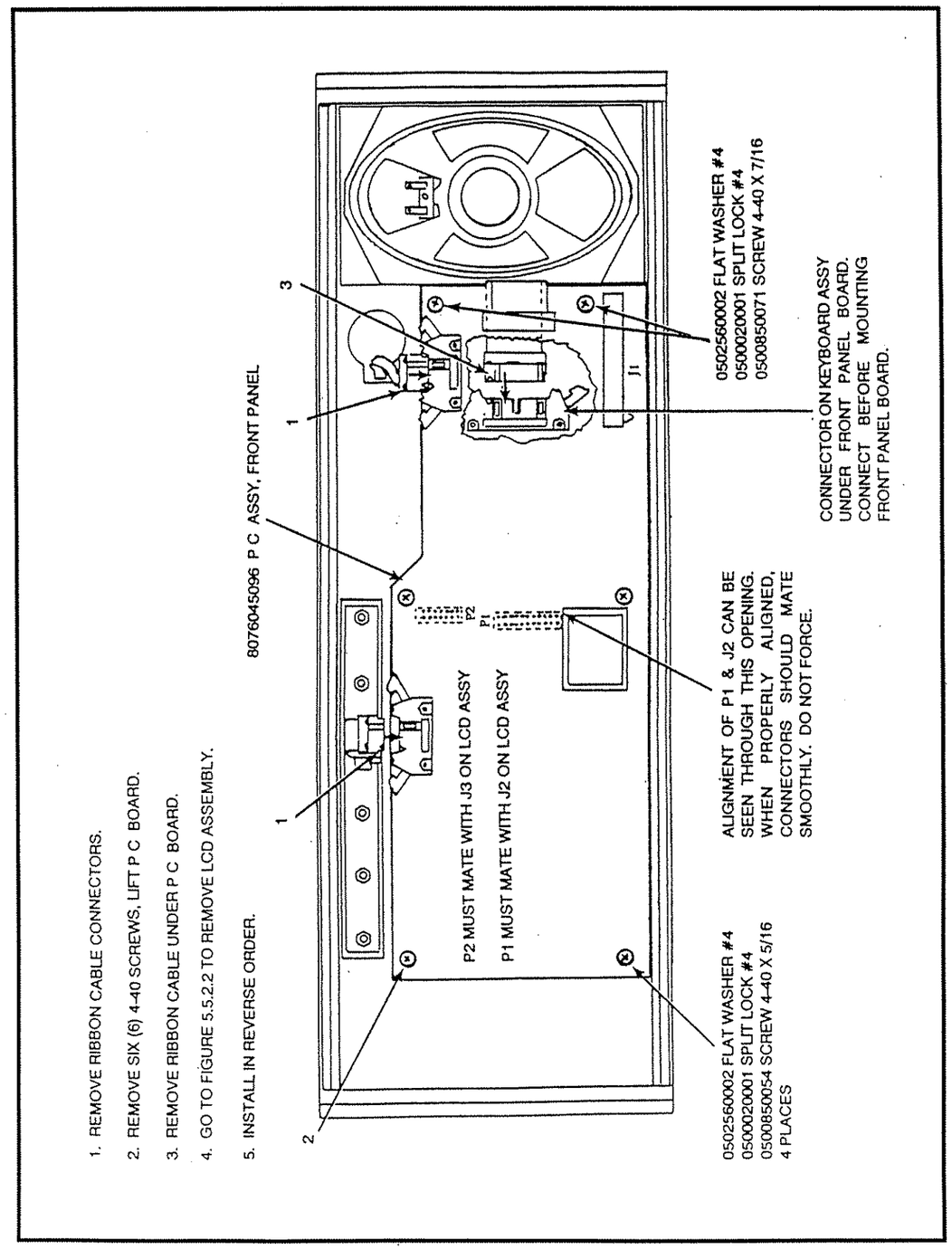

Figure 5.5.2.1 Removal and Installation of Front Panel PC Assembly.

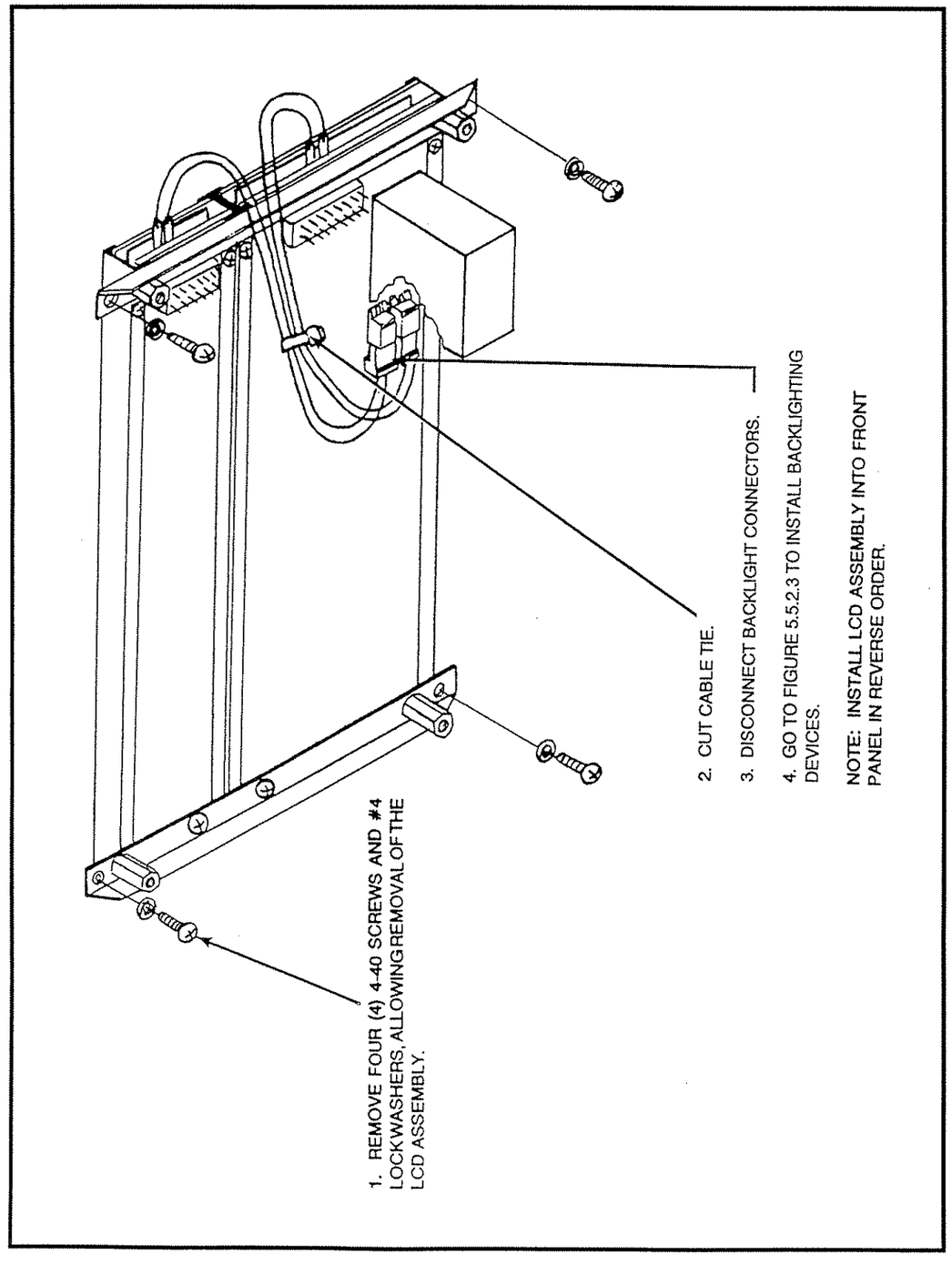

Figure 5.5.2.2 Removal and Installation of LCD Assembly.

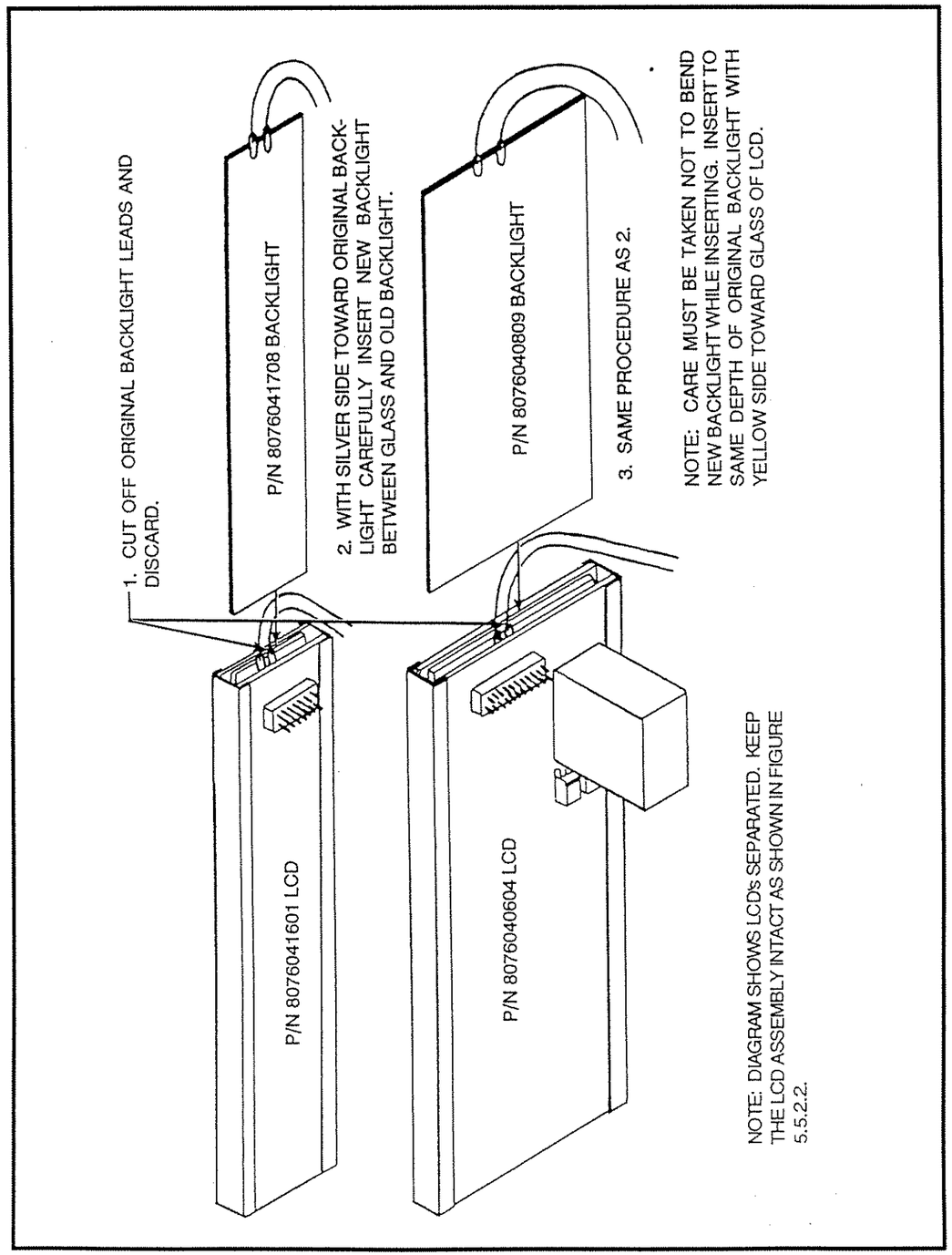

Figure 5.5.2.3 Installation of Backlighting Devices.

5.6 TEST EQUIPMENT REQUIRED OR EQUIVALENT

Multimeter	Simpson 260
Digital Multimeter	Leader LDM-853A
Audio Generator	Leader Model LAG-120B
Audio Voltmeter	Leader Model LMV-181A
Frequency Counter	Systron-Donner Model 6050
Card Extender	Sunair P/N 8076003091
600 ohm 1/4 Watt Resistors	

WARNING: The adjustments called out in the following alignments are all that should be attempted. Any other adjustments not called out are factory adjustments and cannot be done in the RCU-9310R. See Figures 5.7.1.2 for test equipment connections.

5.7 TEST AND ALIGNMENT

5.7.1 RECEIVE REMOTE AUDIO

The RCU-9310R receive audio circuits have been factory adjusted to provide an OdBm output signal from an OdBm input signal from receiver.

The RCU-9310R is checked and aligned as a stand alone unit by connecting the unit and test equipment as shown in Figure 5.7.1.2. and accomplishing the following checks and alignments. Use Figures 5.7.1.1 and 5.7.1.3.

a) Turn on RCU-9310R, go to I/O menu and turn 'OFF' the I/O. Select 'LOCAL', 'MTR', 'LINE' and 'LINE AUD', 'USB-C' and 'LSB-A'.

1) With 1000 Hz OdBm input at Remote Audio J4 pins B and D, check for OdBm level at 3A2A5 J5 pins 5 and E.

2) Measure audio level at 3A2A5 J3 pins H and J and adjust 3A2A4 R3 as required for a reading of .180 VRMS. Measure at 3A2A5 TP1 should be same. 180 VRMS (You will have to extend 3A2A2 on card extender p/n 8076003091 to measure TP1.)

3) Measure audio level at 3A2A5 J4 pins 1 and 2 and adjust 3A2A2 R85 as required for a reading of OdBm with 600 ohm resistor connected across rear panel J3 pins M and L.

4) With DVM measure DC voltage at 3A2A2 P2 pins 21 and Z and adjust 3A2A2 R125 as required for 1.98 VDC. (You will have to extend 3A2A2 on card extender P/N 8076003091, to adjust R125). Bar meter on RCU-9310R front panel should display OdBm ± one bar.

5) Disconnect the 1000Hz OdBm input at Remote Audio J4 pins B and D and connect to J4 pins A and C. Check for OdBm level at 3A2A5 J5 pins 3 and C.

6) Measure audio level at 3A2A5 J3 pins 1 and J and adjust 3A2A4 R11 as required for a reading of .180 VRMS. Measure audio level at 3A2A2 TP2 (You will have to extend 3A2A2 on card extender p/n 8076003091 to measure TP2.) and adjust 3A2A2 R79 as required for a .180 VRMS reading at TP2.

7) Measure audio level at 3A2A5 J3 pins 4 and 5 and adjust 3A2A2 R99 as required for a reading of OdBm with 600 ohm resistor connected across rear panel J3 pins H and J. Turn 'OFF' RCU-9310R.

8) With DVM measure resistance between right side of 3A2A2 R57 and ground. Adjust 3A2A2 R32 for a 4K ohm reading. Turn RCU-9310R 'ON'.

9) Turn the Squelch Control fully clockwise, the audio output of the RCU-9310R speaker should be squelched. Change the Audio Oscillator to 10kHz and return to 1000Hz. The speaker audio should be active and squelched approximately two (2) seconds after the speaker audio is first heard. This completes receive remote audio check and alignment. Turn 'OFF' and remove test equipment and return RCU-9310R to normal operation.

NOTE: If problems occur during the check and alignment, remove and replace Audio Assembly 3A2A2 or use normal troubleshooting procedures to check and repair defective circuits. Faulty Audio Assembly may be sent to Sunair for repairs.

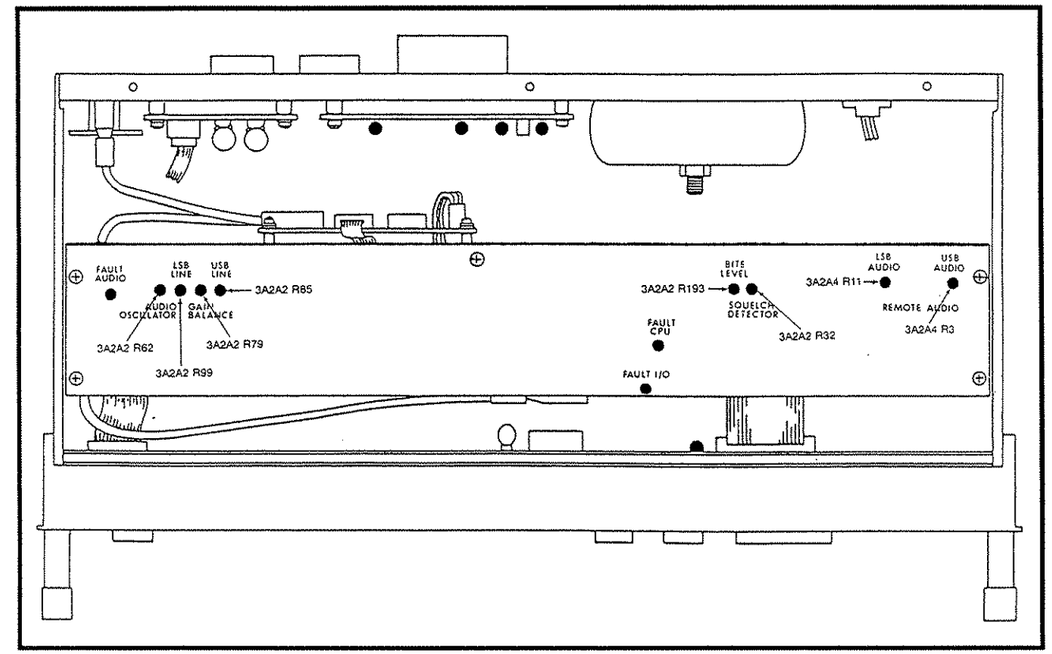

Figure 5.7.1.1 Top View RCU-9310R Alignment Adjustment Locations.

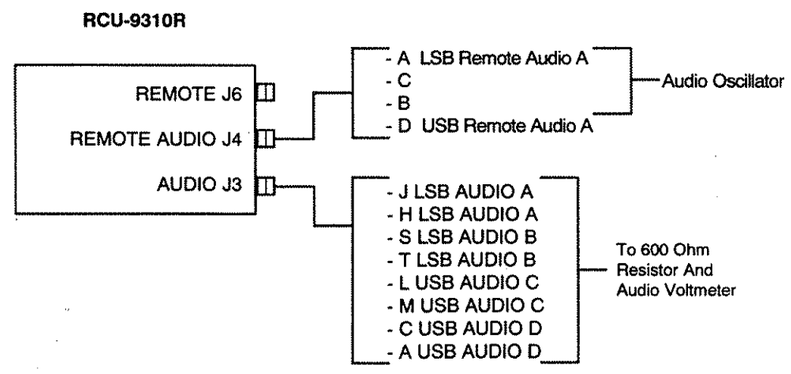

Interconnection of RCU-9310R Remote Control Unit and test equipment.

Figure 5.7.1.2 Receive Remote Audio Test Set Up.

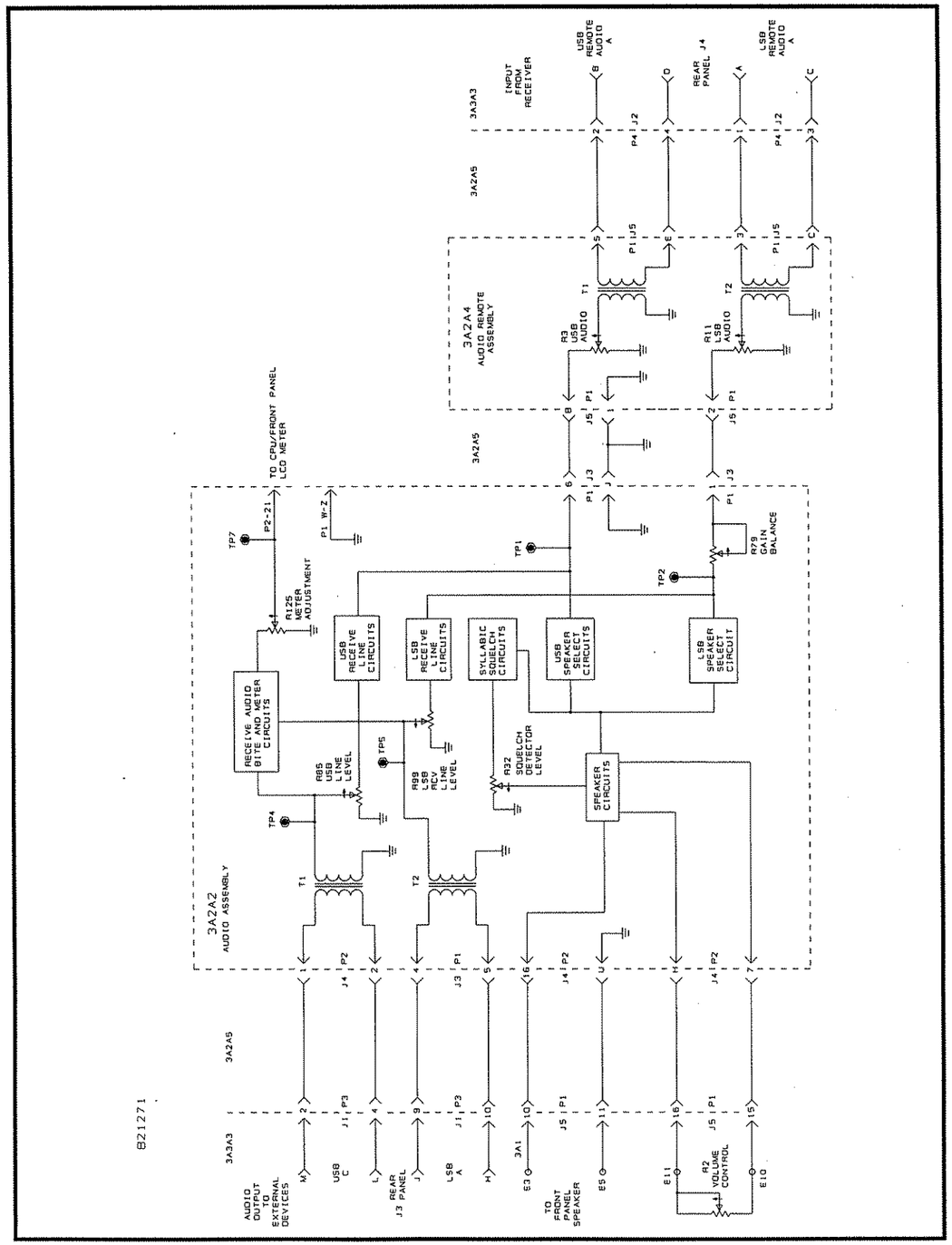

Figure 5.7.1.3 Receive Path Audio.

5.7.2 SOFTWARE SWITCH SETTING CHECKS

Figure 5.7.2 shows the software switch settings on CPU PC Assembly 3A2A1 for RCU-9310R options.

SOFTWARE SWITCH SETTINGS ON CPU PC ASSEMBLY 3A2A1 for RCU-9310R OPTIONS.

NOTE: S1 Sections 1 through 8 are normally set to OPEN position (all rocker switches are raised at open side, see Figure 5.8.4). If while performing maintenance on the RCU-9310R the 3A2A1 is replaced, make sure 3A2A1 S1 is configured for non-optionized or for the applicable options installed in the unit.

S1 SECTION	SELECTION		OPTION/FUNCTION
	RAISED AT OPEN	RAISED AT NUMBER	
1	OPEN		Spare Function / Not used at this time.
2	OPEN		Spare Function / Not used at this time.
3	OPEN		Spare Function / Not used at this time.
4	OPEN		Normal LSB Filter 1A2A4 FL2 installed.
		4	LSB Filter 1A2A4 FL2 plus optional LSB Data Filter 1A2A4 FL3 installed.
5	OPEN		Normal USB Filter 1A2A4 FL4 installed.
		5	USB Filter 1A2A4 FL4 plus optional USB Data Filter 1A2A4 FL5 installed.
6	OPEN		Normal F-9800 Preselector/Postselector not installed at remote operated receiver.
		6	Optional F-9800 Preselector/Postselector installed at remote operated receiver.
7	OPEN		Not Connected / Not used at this time.
8	OPEN		Not Connected / Not used at this time.

Figure 5.7.2 Switch Settings for 3A2A1 S1.

5.8 SCHEMATICS AND PARTS LISTS

The following pages contain schematics and parts lists for the RCU-9310R, see Figure 5.8.1 below.

DESIGNATOR		DESCRIPTION	SUNAIR PART NUMBER
ASSEMBLY	SUBASSEMBLY		
3A1		FRONT PANEL ASSEMBLY	80760400XX
	3A1A1	PC ASSEMBLY FRONT PANEL	8076045096
	3A1A1A1	PC ASSY, REMOTE RF GAIN	8102045094
	3A1A2	KEYBOARD, 6X4	8076046807
	3A1A3	CUSTOM LCD, FULL FUNCTION	8076040604
	3A1A3A1	EL BACKLIGHT	8076040809
	3A1A4	CUSTOM LCD, 1X40 CHARACTER	8076041601
	3A1A4A1	EL BACKLIGHT	8076041708
	3A1A5	KEYBOARD, 1X5	8076046505
3A2		MAIN CHASSIS P/O CHASSIS ASSEMBLY	80780100XX
	3A2A1	PC ASSEMBLY, CPU	8076070091
	3A2A1A1	PC ASSEMBLY, OPTOCOUPLER	8076075092
	3A2A2	PC ASSEMBLY, AUDIO	8076090091
	3A2A3	PC ASSEMBLY, I/O BOARD	8076110092
	3A2A3A1	PC ASSEMBLY, FSK MODEM	8076115094
	3A2A4	PC ASSEMBLY, REMOTE AUDIO	8078085095
	3A2A5	PC ASSEMBLY, MOTHER BOARD	8078017090
3A3		REAR CHASSIS P/O CHASSIS ASSEMBLY	80780100XX
	3A3A1	PC ASSEMBLY, 28V REGULATOR 5 AMP	8078021496
	3A3A2	PC ASSEMBLY, 5/12V REGULATORS	8078025092
	3A3A3	PC ASSEMBLY, AUDIO CONNECTORS	8078018096

Figure 5.8.1 RCU-9310R Assemblies and Subassemblies.

THIS PAGE INTENTIONALLY LEFT BLANK.

FINAL TESTED RCU-9310R

	FINAL TESTED RCU-9310R	80787012XX
3A2A1	PC ASSY, CPU	8076070091
3A2A2	PC ASSY, AUDIO	8102090090
3A2A3	PC ASSY. I/O BOARD	8076110092
3A2A3A1	PC ASSY. FSK MODEM	8076115094
3A2A4	PC ASSY, REMOTE AUDIO BOARD	8078785097
3A3	CHASSIS ASSY RCU-9310R	80787100XX
3A2A1U13	EPROM W/RCU-9310R SOFTWARE	8078773293
3A2A1U14	NOT USED	----------
3A2A3U20	EPROM W/I/O SOFTWARE	8076113296
	BUMPER 13/16 OD 13/16 LG	0508140005
	COVER, CARD CAGE RCU-9310R	8078711905
	COVER, TOP RCU-9310R	80780123XX
	COVER, BOTTOM RCU-9310R	80780125XX

CONNECTOR KIT

	CONNECTOR KIT	8078000499
P3	CONNECTOR, POWER, 19 PIN MALE	1011140004
	CABLE CLAMP, MS3057-8A	1000200001
P4	CONNECTOR, POWER, 10 PIN MALE	1010650025
P6	CONNECTOR, POWER, DB-9, 9 PINFEM	1011960010
	HOOD, W/SCREW LOCK, DB-9	1011970015

CHASSIS ASSEMBLY 3A2/3A3

	CHASSIS ASSEMBLY 3A2/3A3	80787100XX
3A1	FRONT PANEL ASSY	81020400XX
3A2	CHASSIS, CARD CAGE, REMOTE	8078011504
3A2A5	PC ASSY. MOTHER BOARD	8078717091
3A3A1	PC ASSY, 28V REGULATOR, 5 AMP	8078021496
3A3A2	PC ASSY, 5/12V REGULATORS	8078025092
3A3A3	PC ASSY. AUDIO CONNECTORS	8078018096
3A3J1	CONNECTOR, POWER, 10 PIN, MALE	1011050005
3A3J2	CONNECTOR, POWER, 2 PIN ROUND	1010510037
3A3J5	CONNECTOR, POWER, 2 PIN ROUND	1011230011
3A3J6	CONNECTOR, POWER, 9 PIN MALE	1012380025
	JUNCTION SHELL, DB-9	1011130017
	CABLE, RIBBON, 9 COND, 28 AWG	1011150018
3A3CR1	DIODE, BRIDGE CBR25-040	1010630024
3A3F1	FUSE, MDL, 1.5 AMP, 125V	0896540006
3A3F2	FUSE, MDL, 1.5 AMP, 125V	0896540006
3A3F3	FUSE, MDQ, 5 AMP, 250V	0858660008
HSQ1	HEATSINK, TO-3 TRANSISTOR	1005130001
HSQ1	HEATSINK, T0-3 TRANSISTOR	1010710028
HSU1	HEATSINK, T0-3 TRANSISTOR	1005130001
HSU1	HEATSINK, T0-3 TRANSISTOR	1010700022
HSU2	HEATSINK, T0-3 TRANSISTOR	1005130001
HSU2	HEATSINK, T0-3 TRANSISTOR	1010700022
IQ1	INSULATOR, TO-3 SIL ELASTOMER	0841560005
IU1	INSULATOR, TO-3 SIL ELASTOMER	0841560005
1U2	INSULATOR, TO-3 SIL ELASTOMER	0841560005
3A3A1Q1	TRANSISTOR, PNP, MJ11031	1010990012
3A3R1	RESISTOR 5, 5% 20W	1000080021
3A3R2	RESISTOR 5, 5% 20W	1000080021
3A3T1	TRANSFORMER, AC, 200VA	1010670026
3A3A2U1	IC. LINEAR LM350K	1010600028
3A3A2U2	IC. LINEAR LM350K	1010600028
XF1	FUSEHOLDER, PANEL MOUNT	0849030005
XF2	FUSEHOLDER, PANEL MOUNT	0849030005
XF3	FUSEHOLDER, PANEL MOUNT	0849030005
3A3ZS1	VARISTOR, MOV V140LA5	1011300010
3A3ZS2	VARISTOR, MOV V140LA5	1011300010
	CAP, PROTECTIVE .485 DIA.X 3/4	1009060015
	CLAMP, CABLE, FLAT 1 1/16 WIDE	1008650005
	CONNECTOR, RIBBON, 10 PIN FEM	1008070017
	CONNECTOR, HOUSING, 20 PIN	1009070011
	COVER, REAR PANEL	8078015305
	LH SIDE PANEL	80780103XX
	RH SIDE PANEL	80780102XX
	STANDOFF, F-F, 4-40 .375 L	1010830023
	PANEL, REAR, REMOTE	8078015101

Figure 5.8.2 Final Tested RCU-9310R, Chassis Assembly 3A3, and Connector Kit.

FRONT PANEL ASSEMBLY 3A1

	FRONT PANEL ASSEMBLY 3A1	81020400XX
3A1A1	PC ASSY, FRONT PANEL	8076045096
3A1A2	KEYBOARD, 6X4	8102046805
3A1A3	CUSTOM LCD, FULL FUNCTION	8076040604
3A1A3A1	EL BACKLIGHT	8076040809
3A1A4	CUSTOM LCD, 1 X 40 CHARA	8076041601
3A1A4A3	EL BACKLIGHT	8076041708
3A1A5	KEYBOARD, 1X5	8076046505
3A1A6	PC ASSY, REMOTE RF GAIN	8102045094
C1	CAP. .01µF, 50V, X7R 20%	0281730008
C2	CAP. .01µF, 50V, X7R 20%	0281730008
C3	CAP. .01µF, 50V, X7R 20%	0281730008
C4	CAP. .01µF, 50V, X7R 20%	0281730008
C5	CAP. .01µF, 50V, X7R 20%	0281730008
C6	CAP. .01µF, 50V, X7R 20%	0281730008
CR1	DIODE, LED, RED	1006710001
J2	CONNECTOR, PHONE JACK, 2 COND.	0754430006
J3	CONNECTOR, AUDIO, 5 PIN	1003300022
J4	CONNECTOR, AUDIO, 5 PIN	1003300022
J5	CONNECTOR, HEADER, 20 PIN MALE	1011210207
J6	CONNECTOR, HEADER, 14 PIN MALE	1011210142
LS1	SPEAKER, 3X5 OVAL, 8 OHM, 5W	0877970009
R3	RESISTOR 680, 10%, 1/4W	0176630007
R1/S1	POT. 25K W/SPST SW.	1008790028
R2/R4	POT. TANDEM, 5K/25K 2%	1010730029
S2	SWITCH, TOGGLE, DPST	0346430003
	MOUNTING BRACKET, KEYBOARD	8076040507
	BOOT, TOGGLE, SWITCH 15/32-32	0346450004
	BRACKET, SPEAKER	8076041309
	CABLE, RIBBON, 40 COND.	1008080012
	CONNECTOR, RIBBON, 10 PIN FEM	1008070017
	CONNECTOR, RIBBON, 40 PIN FEM	1008110035
	JACK COVER, CONNECTOR	0840860005
	PROTECTIVE COVER, LCD MODULE	8076042500
	GASKET KIT, FRONT PANEL	8076042305
	HANDLE	5024043600
	KEY, POLARIZING	1008070033
	KNOB, .70 D, BLK, WHT DOT,SKRT	0346060001
	KNOB, 1.25D, BLK, SKIRTED	1011490005
	MTG RAIL, RH, LCD MODULE	8076042607
	MTG RAIL, LH, LCD MODULE	8076042704
	PANEL, FRONT	80760402XX
	SHAFT ENCODER	1008810029
	SPACER, HANDLE	5024043502
	STANDOFF, F-F, 4-40 X.437LG	1011240009
	STANDOFF, M-F, 4-40 X.312LG	1011250004

1150BP

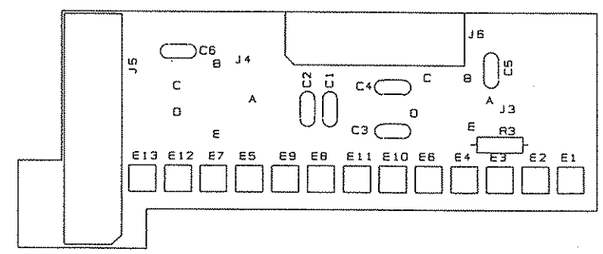

Figure 5.8.3 Front Panel Assembly 3A1, page 1 of 6.

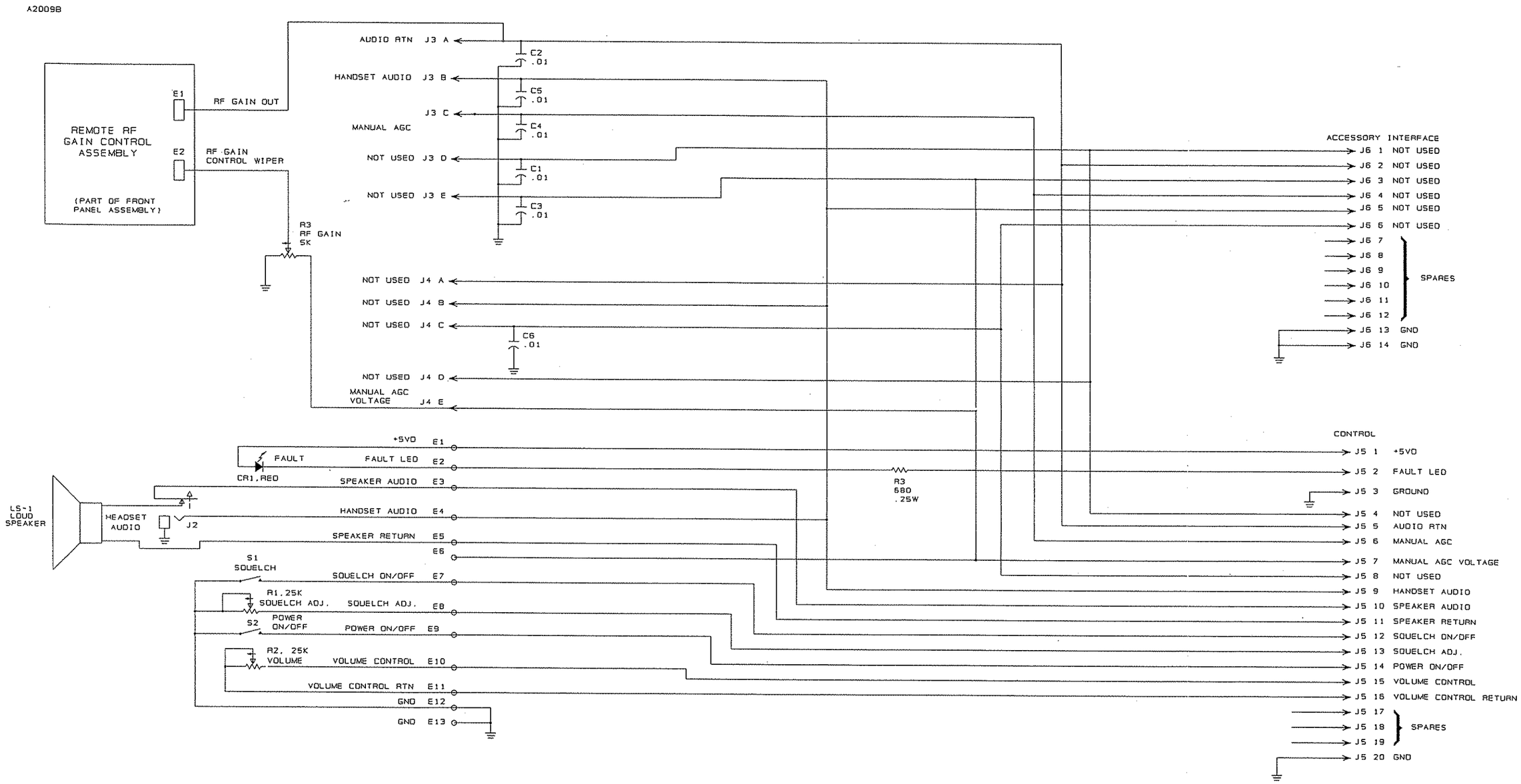

Figure 5.8.3 Front Panel Assembly 3A1, page 2 of 6.

PC ASSY, FRONT PANEL 3A1A1

	PC ASSY, FRONT PANEL 3A1A1	8076045096
C1	CAP. .47µF, 50V, X7R 20%	0283377771
C2	CAP. 0.1µF, 50V, X7R, 20%	0281610002
C3	CAP. 0.047 µF, 50V, X7R, 10%	1010740008
C4	CAP. 100µF 20V 20%	1005120030
C5	CAP. 47µF, 35V	0282190007
C6	CAP. 0.001µF, 100V, X7R, 20%	0281630003
C7	CAP. 0.001µF, 100V, X7R, 20%	0281630003
C10	CAP. .01µF, 50V, X7R 20%	0281730008
C11	CAP. .01µF, 50V, X7R 20%	0281730008
C12	CAP. .01µF, 50V, X7R 20%	0281730008
C13	CAP. .01µF, 50V, X7R 20%	0281730008
C14	CAP. .01µF, 50V, X7R 20%	0281730008
C15	CAP. .01µF, 50V, X7R 20%	0281730008
C16	CAP. .01µF, 50V, X7R 20%	0281730008
C17	CAP. .01µF, 50V, X7R 20%	0281730008
C18	CAP. .01µF, 50V, X7R 20%	0281730008
C19	CAP. .01µF, 50V, X7R 20%	0281730008
C20	CAP. .01µF, 50V, X7R 20%	0281730008
C21	CAP. .01µF, 50V, X7R 20%	0281730008
C22	CAP. .01µF, 50V, X7R 20%	0281730008
C23	CAP. .01µF, 50V, X7R 20%	0281730008
C24	CAP. .01µF, 50V, X7R 20%	0281730008
C25	CAP. .01µF, 50V, X7R 20%	0281730008
C26	CAP. .01µF, 50V, X7R 20%	0281730008
C27	CAP. .01µF, 50V, X7R 20%	0281730008
C28	CAP. .01µF, 50V, X7R 20%	0281730008
C29	CAP. .01µF, 50V, X7R 20%	0281730008
C30	CAP. .01µF, 50V, X7R 20%	0281730008
C31	CAP. .01µF, 50V, X7R 20%	0281730008
C32	CAP. .01µF, 50V, X7R 20%	0281730008
C33	CAP. .01µF, 50V, X7R 20%	0281730008
C34	CAP. .01µF, 50V, X7R 20%	0281730008
C35	CAP. .01µF, 50V, X7R 20%	0281730008
C36	CAP. .01µF, 50V, X7R 20%	0281730008
C37	CAP. .01µF, 50V, X7R 20%	0281730008
C38	CAP. 22µF, 15V, T368	0296660001
C39	CAP. .01µF, 50V, X7R 20%	0281730008
C40	CAP. .01µF, 50V, X7R 20%	0281730008
C41	CAP. 1µF, 35V, T368	0283630001
C42	CAP. 22µF, 15V, T368	0296660001
C43	CAP. .01µF, 50V, X7R 20%	0281730008
C44	CAP. .01µF, 50V, X7R 20%	0281730008
C45	CAP. 22µF, 15V, T368	0296660001
CR1	DIODE, RECTIFIER 1N4004	0405180004
CR2	DIODE, RECTIFIER 1N4004	0405180004
CR3	DIODE, RECTIFIER 1N4004	0405180004
CR4	DIODE, LED, RED, PC MOUNT	1008480029
CR5	DIODE, RECTIFIER 1N4004	0405180004
J1	CONNECTOR, HEADER, 40PIN	1010740016
J2	CONNECTOR, PC, 10 PIN HEADER	1008070009
J3	CONNECTOR, PC, 10 PIN HEADER	1008070009
J4	SOCKET, BOARDMOUNT, 15 PIN	1011010151

Figure 5.8.3 Front Panel Assembly 3A1A1, page 3 of 6.

J5	SOCKET, BOARDMOUNT, 15 PIN	1011010151
P1	CONNECTOR, MOLEX 26 PIN	1008720020
P2	CONNECTOR, MOLEX 14 PIN	1008730025
P3	CONNECTOR, RIBBON, 20 PIN FEM	1008120031
Q1	TRANSISTOR, NPN, SI. 2N4922	0445490004
Q2	TRANSISTOR, NPN, SI. 2N2222A	0448580004
R1	RESISTOR 470, 5%, 1/4W	0184110009
R2	RESISTOR 470, 5%, 1/4W	0184110009
R3	RESISTOR 10K, 10%, 1/4W	0170410005
R4	RESISTOR 10K, 10%, 1/4W	0170410005
R5	RESISTOR 2.2K, 5%, 1/4W	0178070009
R6	RESISTOR 220, 10%, 1/4W	0171320000
R7	RESISTOR 47K, 10%, 1/4W	0171060008
R8	RESISTOR 330, 5%, 1/4W	0170910008
R9	RESISTOR 330, 5%, 1/4W	0170910008
R10	RESISTOR 6.8K, 5%, 1/4W	0174810008
R11	RESISTOR 6.8K, 5%, 1/4W	0174810008
R12	RESISTOR 22K, 5%, 1/4W	0172230004
R13	RESISTOR 100K, 10%, 1/4W	0170390004
RP1	RES NTWK 10 PIN SIP 10K COM	1006130021
U1	IC. DIGITAL 74HC374	1006450033
U2	IC. DIGITAL 74HC244	1006460039
U3	IC. DIGITAL 74HC30	1010240021
U4	IC. DIGITAL 74HC74	1008000019
U5	IC. DIGITAL 74HC14	1006490027
U6	IC. DIGITAL 74HC14	1006490027
U7	IC. DIGITAL 74HC10	1008010006
U8	IC. DIGITAL 74HC138	1006480013
U9	IC. DIGITAL 74HC138	1006480013
U10	IC. DIGITAL 74HC373	1006480030
U11	IC. LINEAR LM556	1011170019
U12	IC. DIGITAL 74HC374	1006450033
U13	IC. DIGITAL 74HC08	1006490019
U14	IC. DIGITAL 74HC14	1006490027
U15	IC. DIGITAL 74HC74	1008000019
U16	IC. DIGITAL 74HC74	1008000019
U17	IC. DIGITAL 74HC165	1008710016
U18	IC. DIGITAL MC14504	1006090037
U19	IC. DIGITAL MC14504	1006090037
U20	IC. DIGITAL MC14504	1006090037
U21	IC. DIGITAL MC14504	1006090037
U22	IC. DIGITAL MC14504	1006090037
U23	IC. DIGITAL 74HC154	1010160028
U24	IC. DIGITAL 74HC02	1010290029
U25	IC. DIGITAL 74HC244	1006460039
U26	IC. DIGITAL 74HC374	1006450033
	CABLE, FLAT, 20 COND. 28AWG	1008080004
	CONNECTOR,PCB,TRANSITION,20PIN	1011090201
	KEY, POLARIZING	1008070033

1113DP

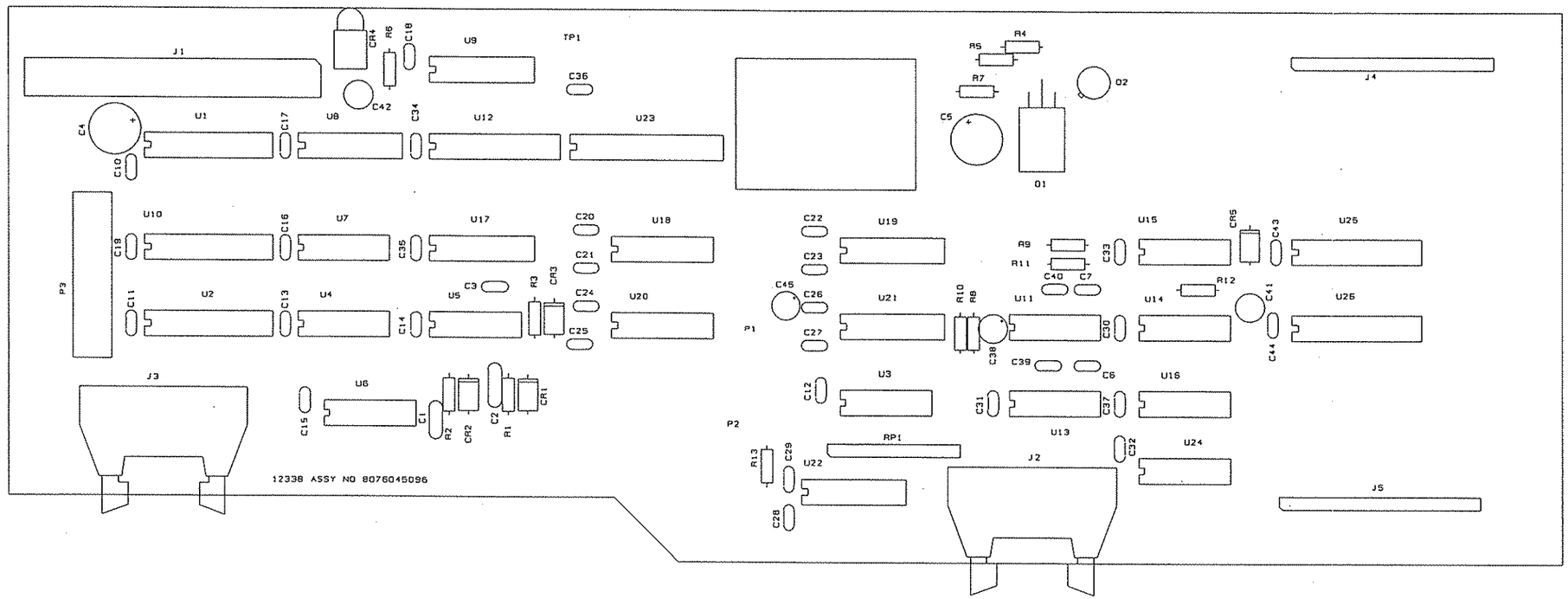

Figure 5.8.3 Front Panel Assembly 3A1A1, page 4 of 6.

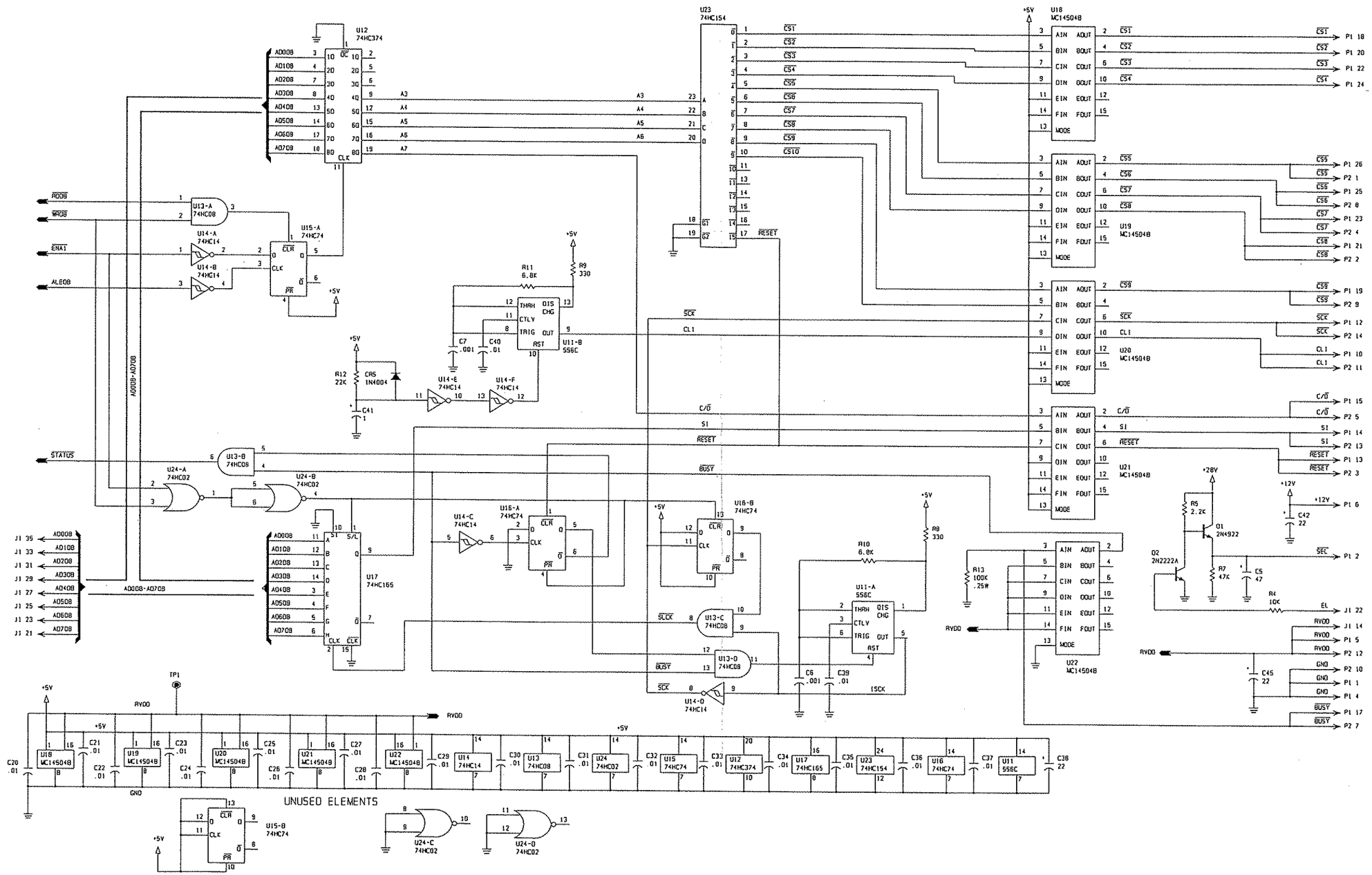

Figure 5.8.3 Front Panel Assembly 3A1A1, page 5 of 6.

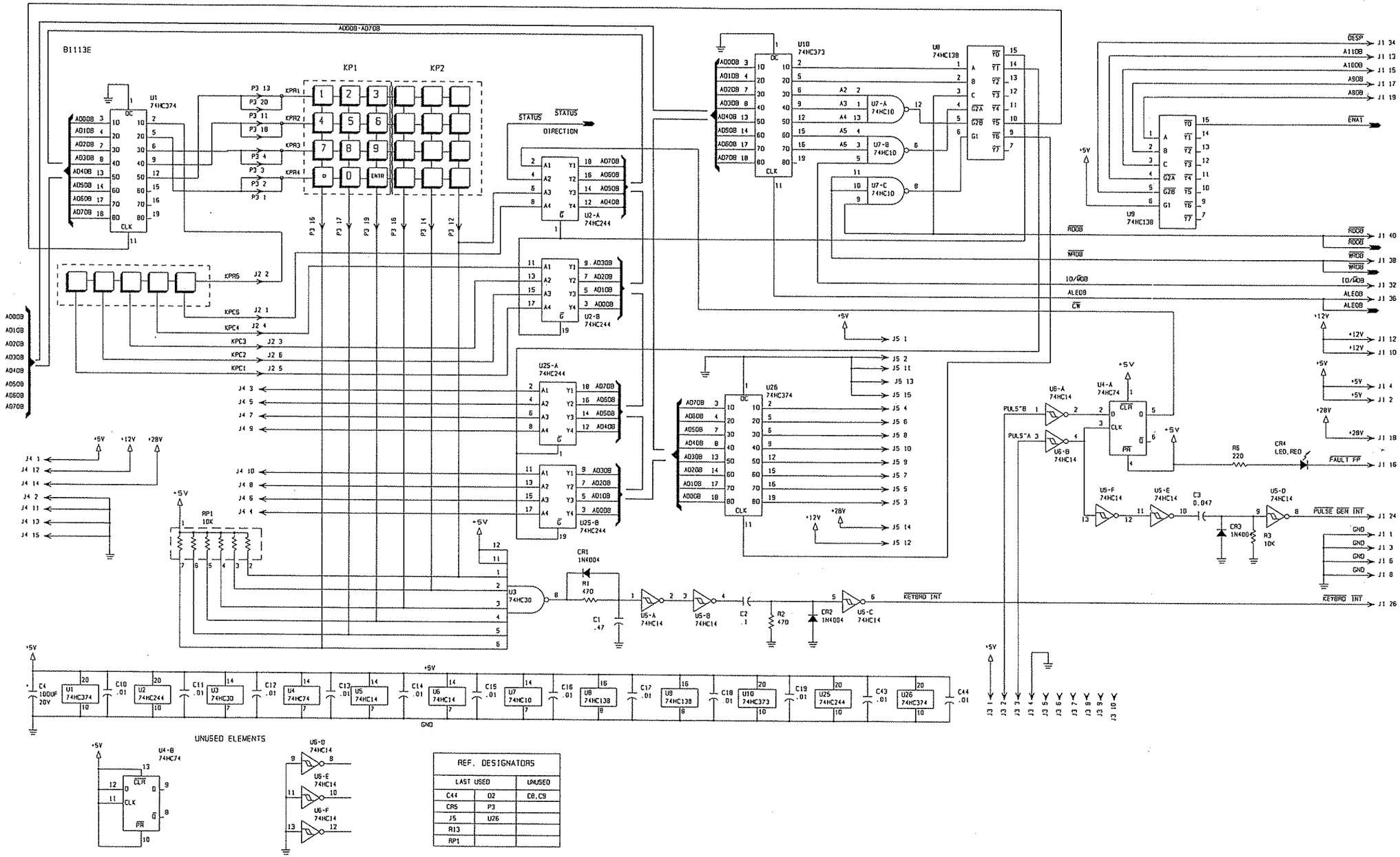

Figure 5.8.3 Front Panel Assembly 3A1A1, page 6 of 6.

REV 01	**PC ASSY, REMOTE RF GAIN**	**8102045094**
C1	CAP. 0.1UF, 50V, X7R	1011180014
C2	CAP. 0.1UF, 50V, X7R	1011180014
C3	CAP. 0.1UF, 50V, X7R	1011180014
C4	CAP. 1UF, 35V	0281660000
P1	HEADER, PIN STRIP, 15 PIN	1011020157
P2	HEADER, PIN STRIP, 15 PIN	1011020157
R1	RESISTOR 5.6K, 5%, 1/8W	1010805622
R2	RESISTOR 4.7K, 5%, 1/8W	1010804723
R3	RESISTOR 10K, 5%, 1/8W	1010801031
U1	IC. DIGITAL X9103	1010820028
U2	IC. LINEAR MC34072	1011440032
U3	IC. DIGITAL 4066BC	1004460023

20201P

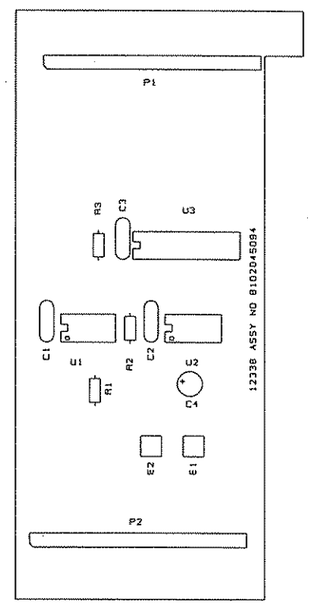

Figure 5.8.4 Remote RF Gain Control Assembly 3A1A1A1, page 1 of 2.

2020AA

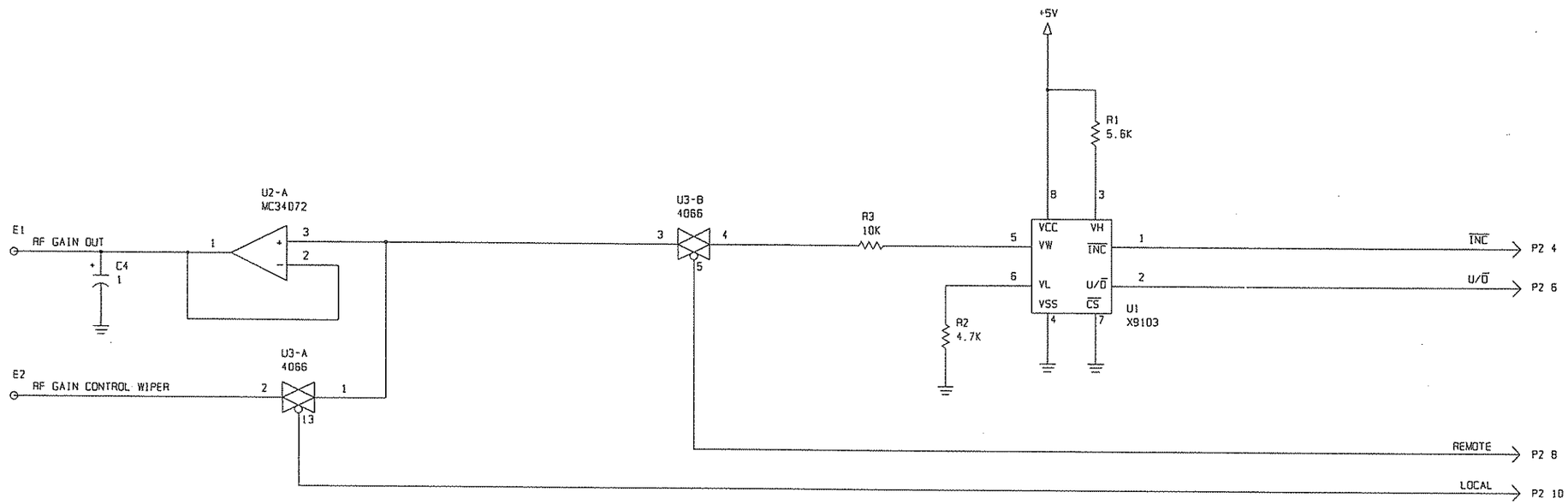

NOTE: P1 MATES WITH J4
P2 MATES WITH J5

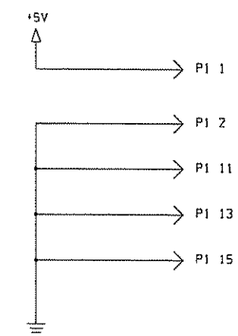

LAST USED	NOT USED
C4	
R3	
U3	
P2	

UNUSED ELEMENTS

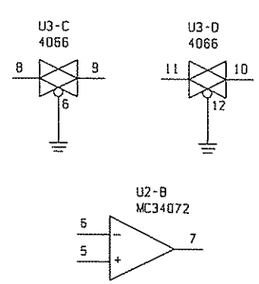

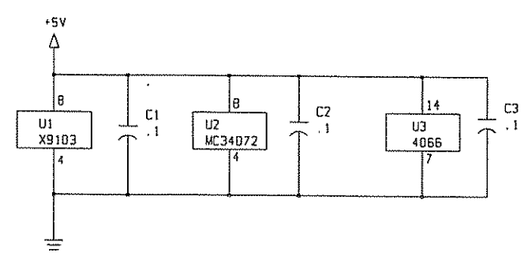

Figure 5.8.4 Remote RF Gain Control Assembly 3A1A1, page 2 of 2.

REV 01	**PC ASSY, MOTHER BD, RCU-9310/R**	**8078717091**
C1	CAP. 0.01UF, 50V, X7R, 20%	0281730008
C2	CAP. 0.01UF, 50V, X7R, 20%	0281730008
C3	CAP. 0.01UF, 50V, X7R, 20%	0281730008
C4	CAP. 0.01UF, 50V, X7R, 20%	0281730008
C5	CAP. 0.01UF, 50V, X7R, 20%	0281730008
C6	CAP. 0.47UF, 50V, X7R, 20%	0283377771
C7	CAP. 15UF, 15V	0281720002
C8	CAP. 15UF, 15V	0281720002
C9	CAP. 0.01UF, 50V, X7R, 20%	0281730008
C10	CAP. 0.01UF, 50V, X7R, 20%	0281730008
J1	CONNECTOR, PC. 40 PIN DUAL	1010920006
J2	CONNECTOR, PC. 40 PIN DUAL	1010920006
J3	CONNECTOR, PC, 22PIN DUAL,FEM	1008830003
J4	CONNECTOR, PC, 22PIN DUAL,FEM	1008830003
J5	CONNECTOR, PC, 6 PIN DUAL, FEM	1011160005
L1	CHOKE, POWER	8076104700
L2	CHOKE, POWER	8076104700
L3	CHOKE, POWER	8076104700
L4	CHOKE, POWER	8076104700
P1	CONNECTOR, RIBBON, 20 PIN FEM	1008120031
P2	CONNECTOR, RIBBON, 26 PIN FEM	1008340031
P3	CONNECTOR, RIBBON, 20 PIN FEM	1008120031
P4	CONNECTOR, RIBBON, 10 PIN FEM	1008070017
U1	CRYSTAL OSCILLATOR, 5.00MHZ	1010580027
XP1	CONNECTOR,PCB,TRANSITION,20PIN	1011090201
XP2	CONNECTOR,PCB,TRANSITION,26PIN	1011090261
XP3	CONNECTOR,PCB,TRANSITION,20PIN	1011090201
XP4	CONNECTOR,PCB,TRANSITION,10PIN	1011090104
	CABLE, RIBBON, 20 COND. 28AWG	1008080004
	CABLE, RIBBON, 10 COND. 28AWG	1008340014
	CABLE, RIBBON, 26 COND. 28AWG	1011180006

Figure 5.8.5 PC Assembly, Mother Board 3A2A5, page 1 of 4.

2018BP

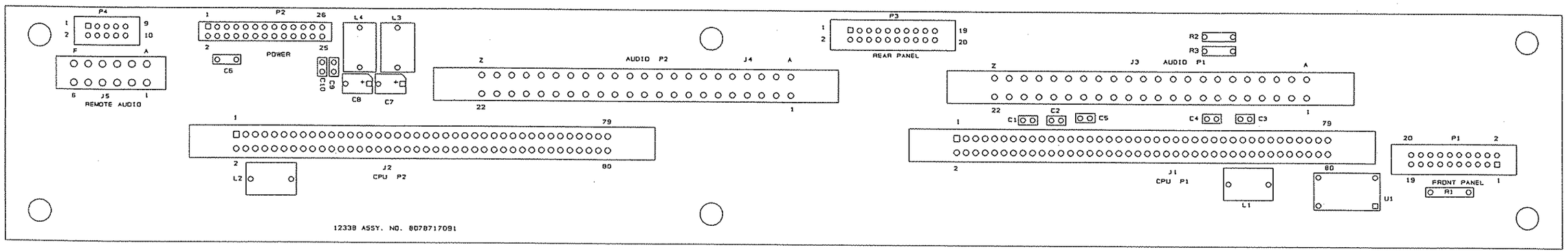

Figure 5.8.5 PC Assembly, Mother Board 3A2A5, page 2 of 4.

A2018B

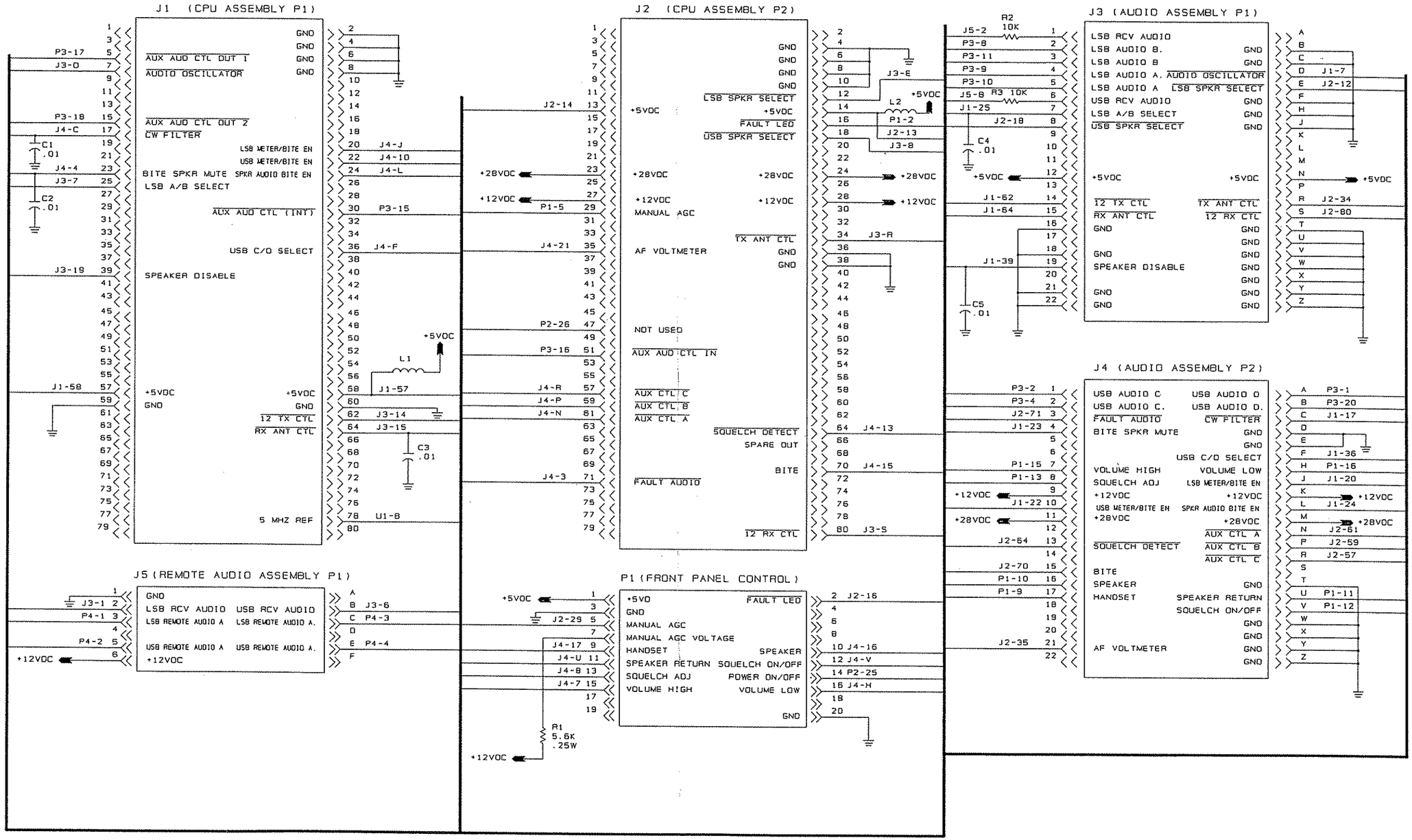

Figure 5.8.5 PC Assembly, Mother Board 3A2A5, page 3 of 4.

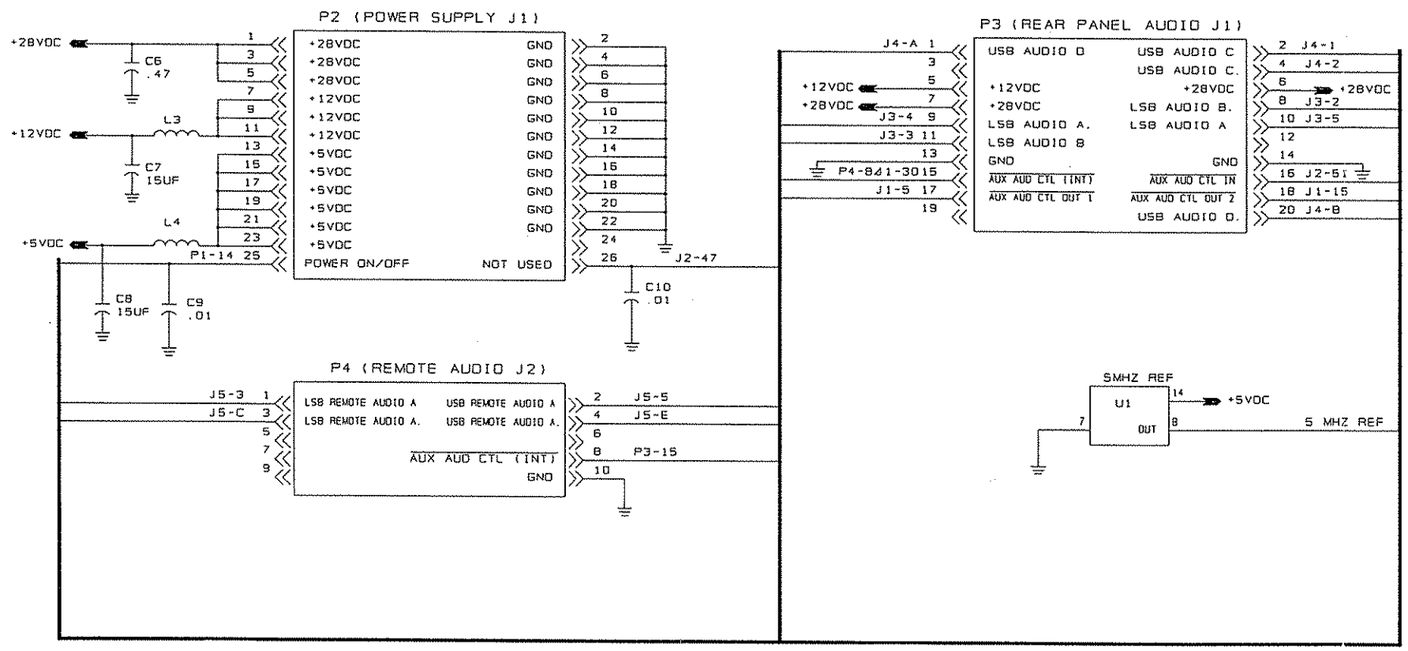

Figure 5.8.5 PC Assembly, Mother Board 3A2A5, page 4 of 4.

PC ASSY, CPU 3A2A1

	PC ASSY, CPU 3A2A1	8076070091
3A2A1A1	PC ASSY, OPTOCOUPLER	8076075092
C3	CAP. .01μF, 50V, X7R 20%	0281730008
C5	CAP. 47μF, 20V, 196D	0281700001
C8	CAP. 6.8μF, 20V, T368	0296780006
C9	CAP. .01μF, 50V, X7R 20%	0281730008
C11	CAP. 0.001μF, 100V, X7R, 20%	0281630003
C12	CAP. 68μF, 15V,	0296540005
C13	CAP. .01μF, 50V, X7R 20%	0281730008
C14	CAP. .01μF, 50V, X7R 20%	0281730008
C15	CAP. .01μF, 50V, X7R 20%	0281730008
C16	CAP. .01μF, 50V, X7R 20%	0281730008
C17	CAP. .01μF, 50V, X7R 20%	0281730008
C18	CAP. .01μF, 50V, X7R 20%	0281730008
C19	CAP. .01μF, 50V, X7R 20%	0281730008
C20	CAP. .01μF, 50V, X7R 20%	0281730008
C21	CAP. .01μF, 50V, X7R 20%	0281730008
C22	CAP. .01μF, 50V, X7R 20%	0281730008
C23	CAP. .01μF, 50V, X7R 20%	0281730008
C24	CAP. .01μF, 50V, X7R 20%	0281730008
C25	CAP. .01μF, 50V, X7R 20%	0281730008
C26	CAP. .01μF, 50V, X7R 20%	0281730008
C27	CAP. 10μF, 20V	1007290005
C28	CAP. .01μF, 50V, X7R 20%	0281730008
C29	CAP. 10μF, 20V	1007290005
C31	CAP. .01μF, 50V, X7R 20%	0281730008
C32	CAP. .01μF, 50V, X7R 20%	0281730008
C33	CAP. .01μF, 50V, X7R 20%	0281730008
C34	CAP. .01μF, 50V, X7R 20%	0281730008
C35	CAP. .01μF, 50V, X7R 20%	0281730008
C36	CAP. .01μF, 50V, X7R 20%	0281730008
C39	CAP. .01μF, 50V, X7R 20%	0281730008
C40	CAP. .01μF, 50V, X7R 20%	0281730008
C41	CAP. .01μF, 50V, X7R 20%	0281730008
C42	CAP. .01μF, 50V, X7R 20%	0281730008
C43	CAP. .01μF, 50V, X7R 20%	0281730008
C44	CAP. .01μF, 50V, X7R 20%	0281730008
C45	CAP. .01μF, 50V, X7R 20%	0281730008
C47	CAP. .01μF, 50V, X7R 20%	0281730008
C48	CAP. .01μF, 50V, X7R 20%	0281730008
C49	CAP. .01μF, 50V, X7R 20%	0281730008
C50	CAP. .01μF, 50V, X7R 20%	0281730008
C51	CAP. .01μF, 50V, X7R 20%	0281730008
C52	CAP. .01μF, 50V, X7R 20%	0281730008
C54	CAP. .01μF, 50V, X7R 20%	0281730008
C55	CAP. .01μF, 50V, X7R 20%	0281730008
C56	CAP. .01μF, 50V, X7R 20%	0281730008
C57	CAP. .01μF, 50V, X7R 20%	0281730008
C60	CAP. .01μF, 50V, X7R 20%	0281730008
C62	CAP. .01μF, 50V, X7R 20%	0281730008
C68	CAP. .01μF, 50V, X7R 20%	0281730008
C69	CAP. .01μF, 50V, X7R 20%	0281730008
C92	CAP. .01μF, 50V, X7R 20%	0281730008
C93	CAP. .01μF, 50V, X7R 20%	0281730008
C94	CAP. .01μF, 50V, X7R 20%	0281730008
C95	CAP. .01μF, 50V, X7R 20%	0281730008
C96	CAP. .01μF, 50V, X7R 20%	0281730008
C98	CAP. .01μF, 50V, X7R 20%	0281730008
C99	CAP. .01μF, 50V, X7R 20%	0281730008
C100	CAP. .01μF, 50V, X7R 20%	0281730008
C101	CAP. .01μF, 50V, X7R 20%	0281730008
C102	CAP. .01μF, 50V, X7R 20%	0281730008
C103	CAP. .01μF, 50V, X7R 20%	0281730008
C104	CAP. .01μF, 50V, X7R 20%	0281730008
C105	CAP. .01μF, 50V, X7R 20%	0281730008
C106	CAP. .01μF, 50V, X7R 20%	0281730008
C107	CAP. .01μF, 50V, X7R 20%	0281730008
C108	CAP. .01μF, 50V, X7R 20%	0281730008
C109	CAP. .01μF, 50V, X7R 20%	0281730008
C111	CAP. .01μF, 50V, X7R 20%	0281730008
C112	CAP. .01μF, 50V, X7R 20%	0281730008
C113	CAP. .01μF, 50V, X7R 20%	0281730008
C114	CAP. .01μF, 50V, X7R 20%	0281730008
C123	CAP. .01μF, 50V, X7R 20%	0281730008
C124	CAP. .01μF, 50V, X7R 20%	0281730008
C125	CAP. .01μF, 50V, X7R 20%	0281730008
C131	CAP. .01μF, 50V, X7R 20%	0281730008
C132	CAP. .01μF, 50V, X7R 20%	0281730008
C133	CAP. .01μF, 50V, X7R 20%	0281730008
C134	CAP. .01μF, 50V, X7R 20%	0281730008
C135	CAP. .01μF, 50V, X7R 20%	0281730008
C136	CAP. .01μF, 50V, X7R 20%	0281730008
C137	CAP. .01μF, 50V, X7R 20%	0281730008
C138	CAP. .01μF, 50V, X7R 20%	0281730008
C139	CAP. .01μF, 50V, X7R 20%	0281730008
C140	CAP. .01μF, 50V, X7R 20%	0281730008
C141	CAP. .01μF, 50V, X7R 20%	0281730008
C142	CAP. .01μF, 50V, X7R 20%	0281730008
C143	CAP. .01μF, 50V, X7R 20%	0281730008
C144	CAP. .01μF, 50V, X7R 20%	0281730008
C145	CAP. .01μF, 50V, X7R 20%	0281730008
C146	CAP. 3.3μF, 35V, 196D	0281680001
CR1	DIODE, SIGNAL, GERM. 1N270	0405510004
CR2	DIODE, SIGNAL, SIL. 1N4454	0405270003
CR5	DIODE, RECTIFIER 1N4004	0405180004
CR7	DIODE, LED, RED, PC MOUNT	1008480029
CR9	DIODE, TRANSIENT SUPR.TVS505	1010720007
CR10	DIODE, ZENER 1N5227B	0405250002
CR11	DIODE, SIGNAL, SIL. 1N4454	0405270003
FB1	BEAD, FERRITE .200OD,.437LG	1010910019
FB2	FERRITE BEAD, 5000 PERM	1010980017
J1	SOCKET, BOARDMOUNT, 11 PIN	1011010119
J2	SOCKET, BOARDMOUNT, 11 PIN	1011010119
J3	SOCKET, BOARDMOUNT, 11 PIN	1011010119
J4	SOCKET, BOARDMOUNT, 11 PIN	1011010119
J5	SOCKET, BOARDMOUNT, 11 PIN	1011010119
J6	SOCKET, BOARDMOUNT, 11 PIN	1011010119
J7	SOCKET, BOARDMOUNT, 11 PIN	1011010119

Figure 5.8.6 PC Assembly, CPU 3A2A1, page 1 of 8.

L1	INDUCTOR, MOLDED, 33μH, 5%	0659690004
L2	INDUCTOR, MOLDED, 33μH, 5%	0659690004
L3	INDUCTOR, MOLDED, 33μH, 5%	0659690004
L4	INDUCTOR, MOLDED, 33μH, 5%	0659690004
L5	INDUCTOR, MOLDED, 33μH, 5%	0659690004
L6	INDUCTOR, MOLDED, 33μH, 5%	0659690004
L7	INDUCTOR, MOLDED, 33μH, 5%	0659690004
L8	INDUCTOR, MOLDED, 33μH, 5%	0646300008
L9	INDUCTOR, MOLDED, 33μH, 5%	0646300008
L12	INDUCTOR, MOLDED, 33μH, 5%	0659690004
L13	INDUCTOR, MOLDED, 33μH, 5%	0659690004
L15	INDUCTOR, MOLDED, 33μH, 5%	0659690004
L16	INDUCTOR, MOLDED, 33μH, 5%	0659690004
L17	INDUCTOR, MOLDED, 33μH, 5%	0659690004
L18	INDUCTOR, MOLDED, 33μH, 5%	0646300008
P3	CONNECTOR, HEADER 40 PIN	1010780000
Q1	TRANSISTOR, NPN, SI. 2N4124	0448010003
Q2	TRANSISTOR, NPN, SI. 2N4124	0448010003
R3	RESISTOR 1K, 10%, 1/4W	0171560001
R5	RESISTOR 470, 5%, 1/4W	0184110009
R6	RESISTOR 10K, 10%, 1/4W	0170410005
R12	RESISTOR 22K, 10%, 1/4W	0172230004
R13	RESISTOR 10K, 10%, 1/4W	0170410005
R14	RESISTOR 10, 5%, 1/4W	0177160004
R15	RESISTOR 1M, 10%, 1/4W	0170650006
R16	RESISTOR 3.9K, 10%, 1/4W	0178830003
R18	RESISTOR 220, 10%, 1/4W	0171320000
R21	RESISTOR 4.7K, 5%, 1/4W	0170770001
R22	RESISTOR 5.1 1K, 1%, 1/8W	1003120016
R23	RESISTOR 28K 1%, 1/8W	1004050038
R40	RESISTOR 1.91K 1%, 1/8W	1008530018
R41	RESISTOR 6.81K, 1%, 1/8W	0196350000
R42	RESISTOR 1.91K 1%, 1/8W	1008530018
R43	RESISTOR 6.81K, 1%, 1/8W	0196350000
R46	RESISTOR 10K, 1%, 1/8W	1003050026
R47	RESISTOR 10K, 1%, 1/8W	1003050026
R54	RESISTOR 10K, 10%, 1/4W	0170410005
R55	RESISTOR 470, 5%, 1/4W	0184110009
R56	RESISTOR 15, 10%, 1/4W	0181740001
R79	RESISTOR 10K, 10%, 1/4W	0170410005
R80	RESISTOR 10K, 10%, 1/4W	0170410005
R81	RESISTOR 22K, 5%, 1/4W	0172230004
R88	RESISTOR 5.11K, 1%, 1/8W	1003120016
R89	RESISTOR 5.11K, 1%, 1/8W	1003120016
R90	RESISTOR 2.2K, 5%, 1/4W	0178070009
R91	RESISTOR 2.2K, 5%, 1/4W	0178070009
R92	RESISTOR 2.2K, 5%, 1/4W	0178070009
R93	RESISTOR 2.2K, 5%, 1/4W	0178070009
R94	RESISTOR 2.2K, 5%, 1/4W	0178070009
R95	RESISTOR 2.2K, 5%, 1/4W	0178070009
R96	RESISTOR 2.2K, 5%, 1/4W	0178070009
R97	RESISTOR 10K, 10%, 1/4W	0170410005
R98	RESISTOR 680, 10%, 1/4W	0176630007
R99	RESISTOR 10K, 10%, 1/4W	0170410005
R100	RESISTOR 1.91K 1%, 1/8W	1008530018

R101	RESISTOR 6.81K, 1%, 1/8W	0196350000
R102	RESISTOR 7.87K 1%, 1/8W	1004090021
R103	RESISTOR 6.81K, 1%, 1/8W	0196350000
R104	RESISTOR 1K, 10%, 1/4W	0171560001
R105	RESISTOR 22K, 5%, 1/4W	0172230004
RP1	RES NTWK 10 PIN SIP 10K COM	1006130021
RP2	RES NTWK 10 PIN SIP 10K COM	1006130021
RP3	RES NTWK 10 PIN SIP 10K COM	1006130021
RP4	RES NTWK 10 PIN SIP 10K COM	1006130021
RP5	RES NTWK 10 PIN SIP 10K COM	1006130021
RP7	RES NTWK 10 PIN SIP 10K COM	1006130021
RP8	RES NTWK 10 PIN SIP 10K COM	1006130021
RP9	RES NTWK 10 PIN SIP 22K COM	1006570012
RP13	RES NTWK 10 PIN SIP 10K COM	1006130021
RP18	RES NTWK 10 PIN SIP 10K COM	1006130021
RP19	RES NTWK 10 PIN SIP 10K COM	1006130021
S1	SWITCH, SPST, ROCKER DIP	1010210025
S2	SWITCH, PUSHBUTTON, SPST	1010710001
U2	IC. DIGITAL 80C85A	1007400013
U3	IC. DIGITAL RAM 6264	1010650009
U4	IC. DIGITAL 74HC244	1006460039
U5	IC. DIGITAL 74HC245	1006470034
U6	IC. DIGITAL 74HC244	1006460039
U7	IC. DIGITAL 74HC373	1006480030
U8	IC. DIGITAL 28C64	1010660004
U9	IC. DIGITAL 74HC139	1006770038
U10	IC. DIGITAL 74HC244	1006460039
U11	IC. DIGITAL 74HC244	1006460039
U12	IC. DIGITAL 74HC374	1006450033
U13	EPROM W/RCU-9310R SOFTWARE	8078773293
U14	NOT USED	----------
U15	IC. DIGITAL 74HC00	1008190004
U16	IC. DIGITAL 74HC08	1006490019
U17	IC. DIGITAL ADC0804	1010670000
U18	IC. DIGITAL 74HC374	1006450033
U19	IC. LINEAR LM358	1010680005
U22	IC. DIGITAL 74HC245	1006470034
U23	IC. DIGITAL 74HC244	1006460039
U24	IC. DIGITAL 4067B	1006800034
U25	IC. DIGITAL 74HC244	1006460039
U28	IC. DIGITAL 74HC154	1010160028
U29	IC. DIGITAL 74HC154	1010160028
U30	IC. DIGITAL 74HC138	1006480013
U32	IC. DIGITAL 74HC374	1006450033
U33	IC. DIGITAL 74HC374	1006450033
U34	IC. DIGITAL 7417	1003870007
U35	IC. DIGITAL 74HC374	1006450033
U36	IC. DIGITAL 74HC374	1006450033
U39	IC. DIGITAL 74HC374	1006450033
U41	IC. DIGITAL 74HC374	1006450033
U42	IC. DIGITAL 74HC374	1006450033
U45	IC. DIGITAL 74HC14	1006490027
U46	IC. DIGITAL 74HC244	1006460039
U47	IC. DIGITAL 74HC14	1006490027

NOTE: U13/U14 are not part of this PC Assembly.

Figure 5.8.6 PC Assembly, CPU 3A2A1, page 2 of 8.

U48	IC. LINEAR 556C/3456	1005620032
U49	IC. DIGITAL 74HC14	1006490027
U50	IC. DIGITAL 8259A	1006800018
U51	IC. DIGITAL 74HC244	1006460039
U53	IC. DIGITAL 74HC244	1006460039
U54	IC. DIGITAL 74HC374	1006450033
U55	IC. DIGITAL 74HC244	1006460039
U56	IC. DIGITAL 74HC08	1006490019
U58	IC. DIGITAL 74HC14	1006490027
U59	IC. DIGITAL 74HC374	1006450033
U60	IC. DIGITAL 74HC192	1010690001
U61	IC. DIGITAL 74HC74	1008000019
U67	IC. DIGITAL 74HC139	1006770038
U75	IC. DIGITAL 5369 REPL.	1010700006
U77	IC. DIGITAL 2501-4	1010630008
U100	IC. DIGITAL 2501-4	1010630008
U107	IC. DIGITAL 74HC244	1006460039
XU2	SOCKET, IC, 40 PIN TAILLESS	1006620010
XU3	SOCKET, IC, 28 PIN TAILLESS	1006620001
XU8	SOCKET, IC, 28 PIN TAILLESS	1006620001
XU13	SOCKET, IC, 28 PIN TAILLESS	1006620001
XU14	SOCKET, IC, 28 PIN TAILLESS	1006620001
	MOUNTING PLATE, CPU	8076070805

Figure 5.8.6 PC Assembly, CPU 3A2A1, page 3 of 8.

NOTE: NORMAL SETTING FOR S1: SEGMENTS 1 THRU 8, ALL SEGMENTS DEPRESSED TO NUMBERED END.

1001CP

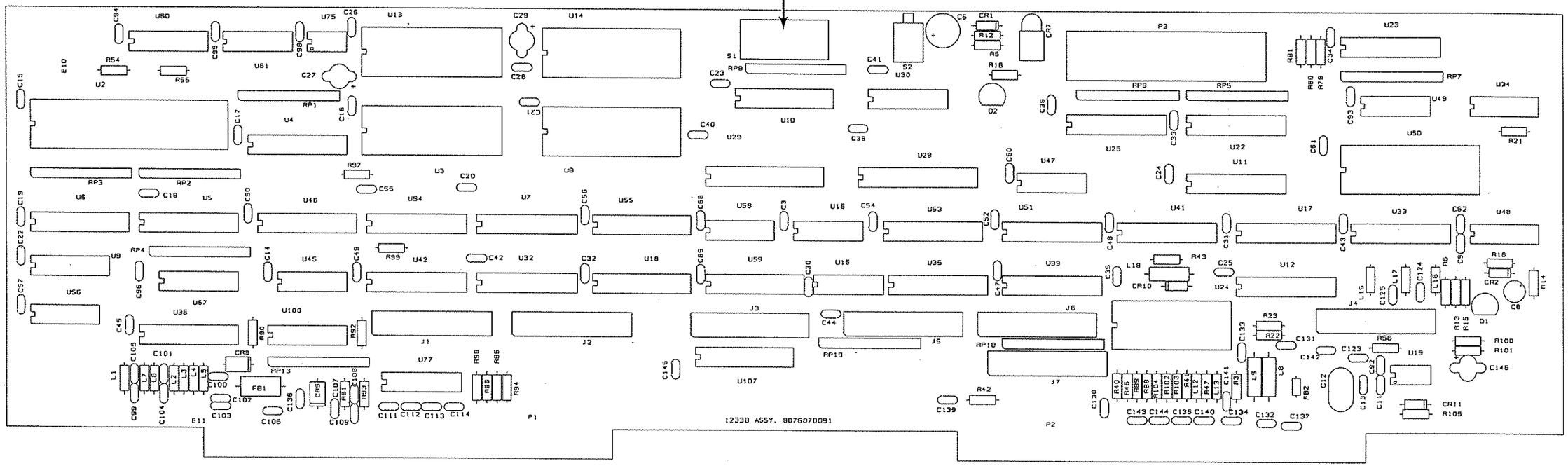

Figure 5.8.6 PC Assembly, CPU 3A2A1, page 4 of 8.

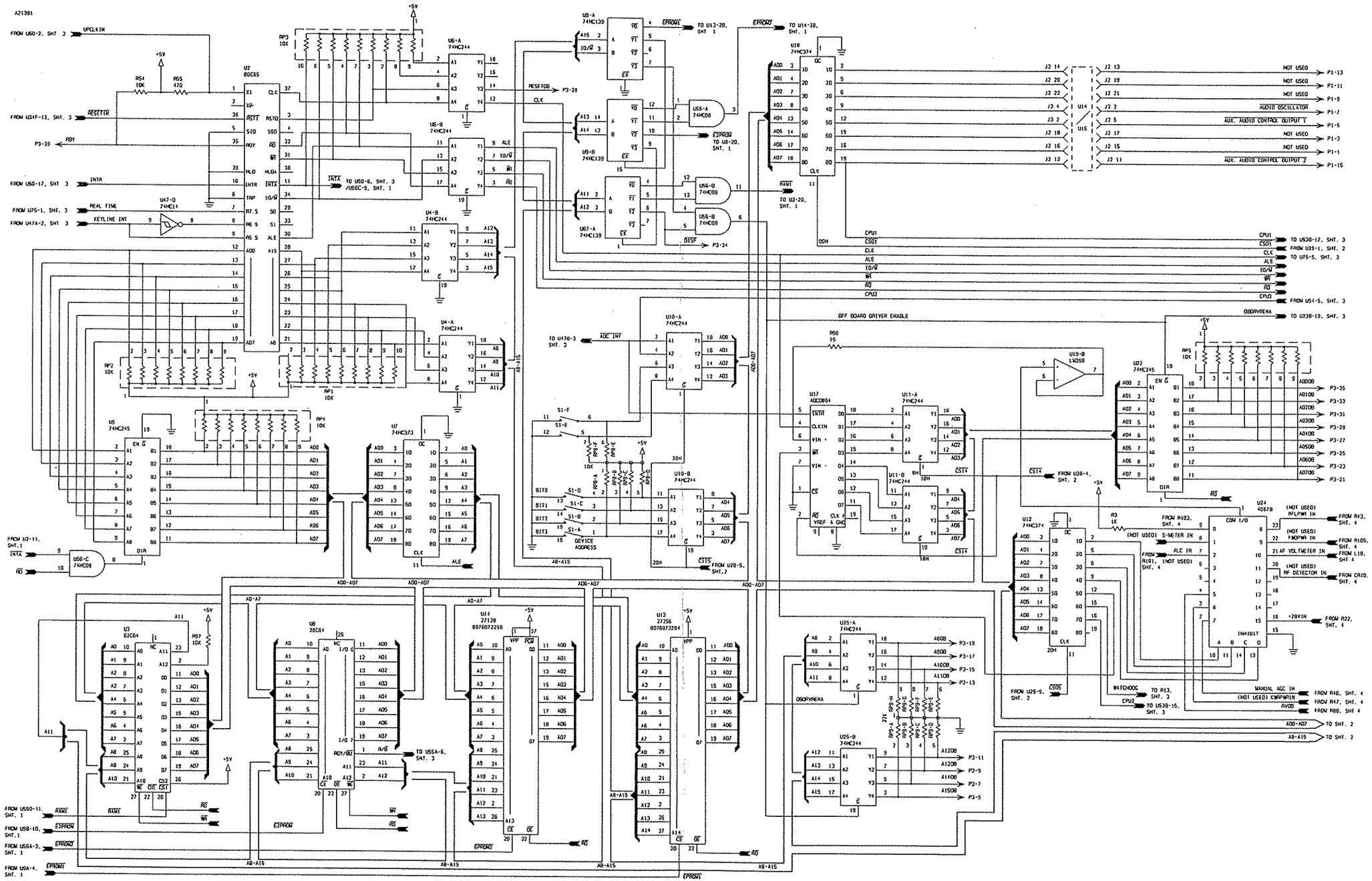

Figure 5.8.6 PC Assembly, CPU 3A2A1, page 5 of 8.

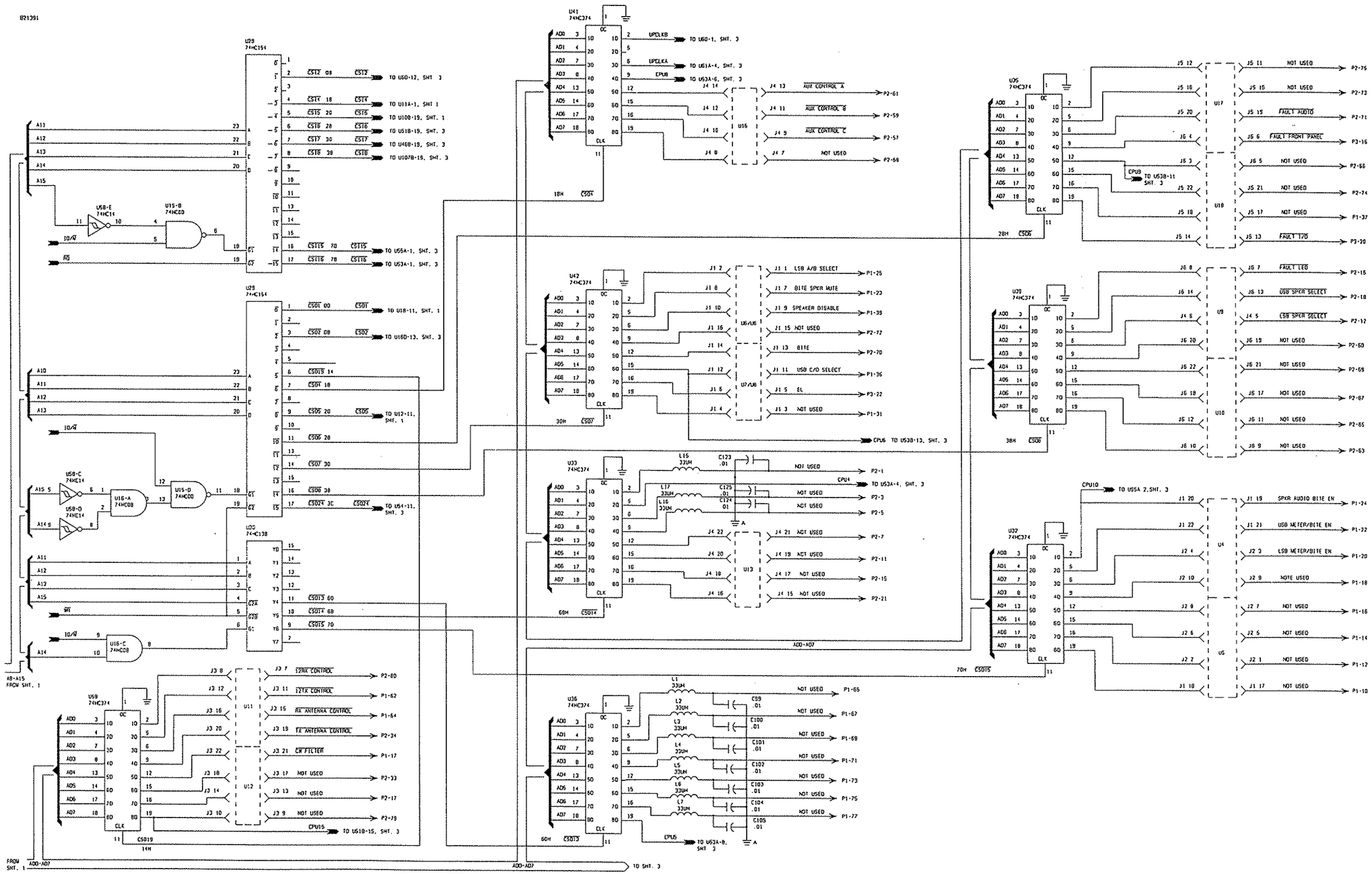

Figure 5.8.6 PC Assembly, CPU 3A2A1, page 6 of 8.

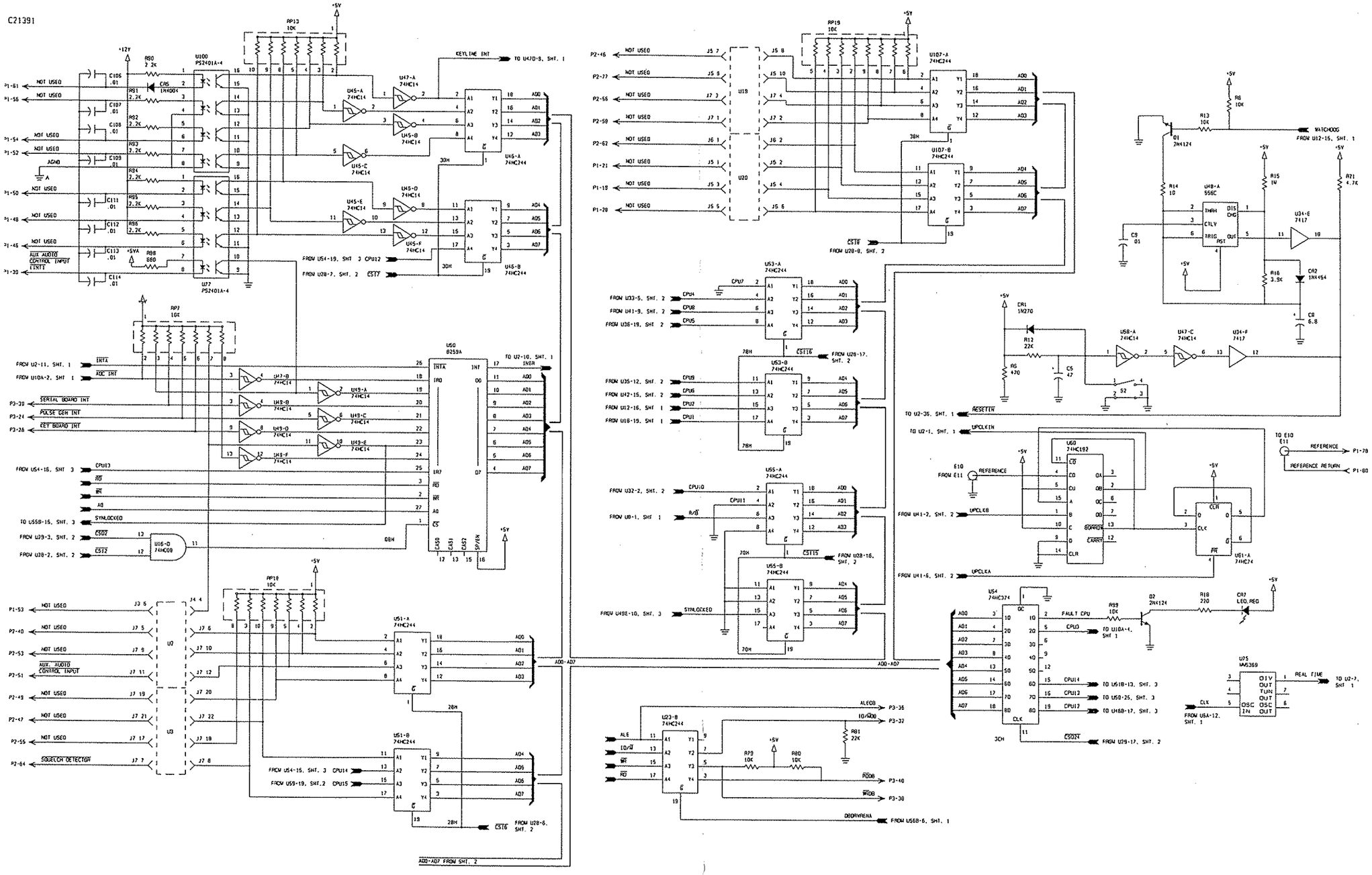

Figure 5.8.6 PC Assembly, CPU 3A2A1, page 7 of 8.

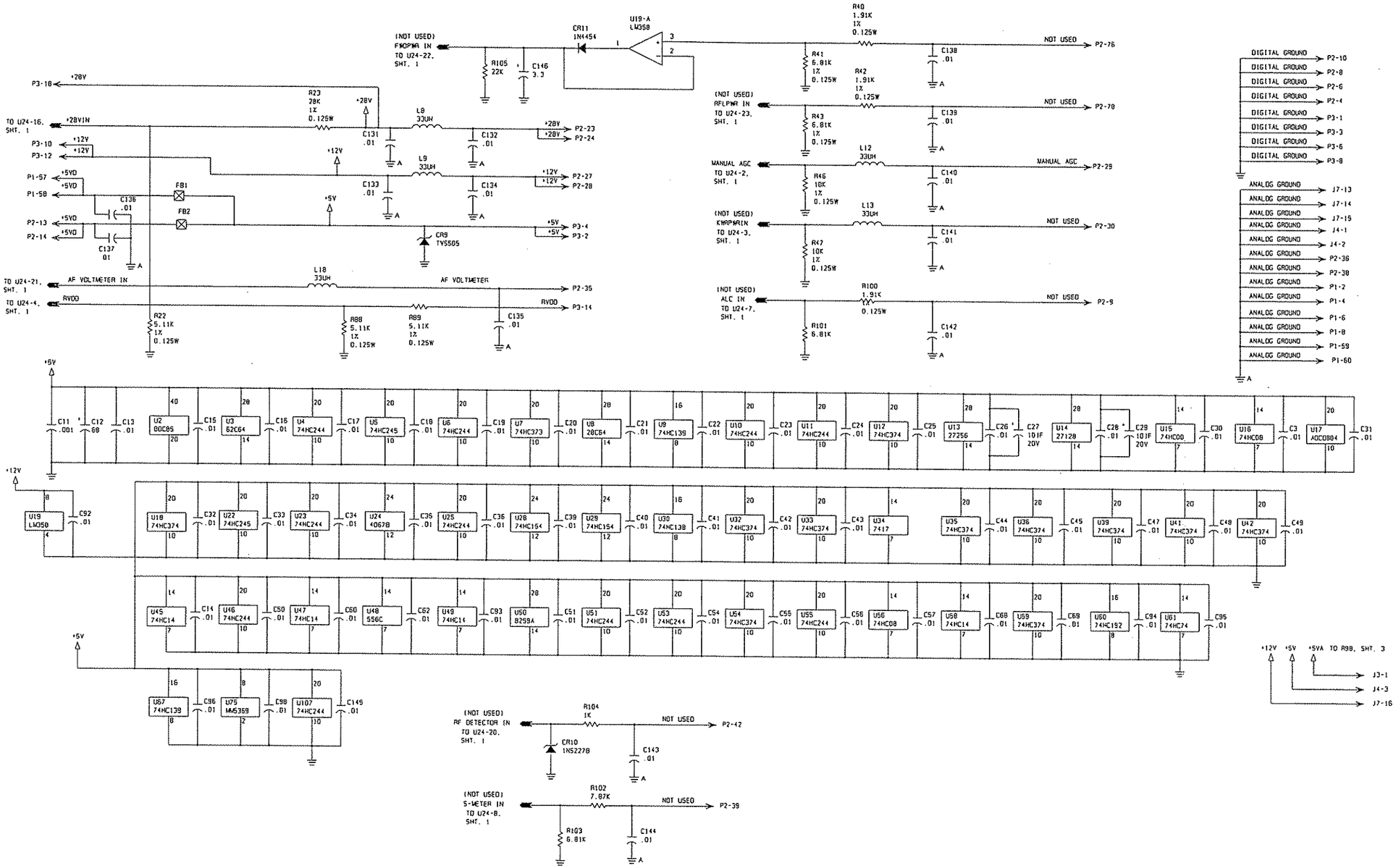

Figure 5.8.6 PC Assembly, CPU 3A2A1, page 8 of 8.

PC ASSY, OPTOCOUPLER 3A2A1A1

	PC ASSY, OPTOCOUPLER 3A2A1A1	8076075092
C1	CAP. .47μF, 50V, X7R 20%	0283377771
C2	CAP. 1μF, 35V, T368	0283630001
C3	CAP. .01μF, 50V, X7R 20%	0281730008
C4	CAP. .01μF, 50V, X7R 20%	0281730008
C5	CAP. .01μF, 50V, X7R 20%	0281730008
C6	CAP. .01μF, 50V, X7R 20%	0281730008
C7	CAP. .01μF, 50V, X7R 20%	0281730008
C8	CAP. .01μF, 50V, X7R 20%	0281730008
C9	CAP. .01μF, 50V, X7R 20%	0281730008
C10	CAP. .01μF, 50V, X7R 20%	0281730008
C11	CAP. .01μF, 50V, X7R 20%	0281730008
C12	CAP. .01μF, 50V, X7R 20%	0281730008
C13	CAP. .01μF, 50V, X7R 20%	0281730008
C14	CAP. .01μF, 50V, X7R 20%	0281730008
C15	CAP. .01μF, 50V, X7R 20%	0281730008
C16	CAP. .01μF, 50V, X7R 20%	0281730008
C17	CAP. .01μF, 50V, X7R 20%	0281730008
C18	CAP. .01μF, 50V, X7R 20%	0281730008
C19	CAP. .01μF, 50V, X7R 20%	0281730008
C20	CAP. .01μF, 50V, X7R 20%	0281730008
C21	CAP. .01μF, 50V, X7R 20%	0281730008
C22	CAP. .01μF, 50V, X7R 20%	0281730008
C23	CAP. .01μF, 50V, X7R 20%	0281730008
C24	CAP. .01μF, 50V, X7R 20%	0281730008
C25	CAP. .01μF, 50V, X7R 20%	0281730008
C26	CAP. .01μF, 50V, X7R 20%	0281730008
C27	CAP. .01μF, 50V, X7R 20%	0281730008
C28	CAP. .01μF, 50V, X7R 20%	0281730008
C29	CAP. .01μF, 50V, X7R 20%	0281730008
C30	CAP. .01μF, 50V, X7R 20%	0281730008
C31	CAP. .01μF, 50V, X7R 20%	0281730008
C32	CAP. .01μF, 50V, X7R 20%	0281730008
C33	CAP. .01μF, 50V, X7R 20%	0281730008
C34	CAP. .01μF, 50V, X7R 20%	0281730008
C35	CAP. .01μF, 50V, X7R 20%	0281730008
C36	CAP. .01μF, 50V, X7R 20%	0281730008
C37	CAP. .01μF, 50V, X7R 20%	0281730008
C38	CAP. .01μF, 50V, X7R 20%	0281730008
C39	CAP. .01μF, 50V, X7R 20%	0281730008
C40	CAP. .01μF, 50V, X7R 20%	0281730008
C41	CAP. .01μF, 50V, X7R 20%	0281730008
C42	CAP. .01μF, 50V, X7R 20%	0281730008
C43	CAP. .01μF, 50V, X7R 20%	0281730008
C44	CAP. .01μF, 50V, X7R 20%	0281730008
C45	CAP. .01μF, 50V, X7R 20%	0281730008
C46	CAP. .01μF, 50V, X7R 20%	0281730008
C47	CAP. .01μF, 50V, X7R 20%	0281730008
C48	CAP. .01μF, 50V, X7R 20%	0281730008
C49	CAP. .01μF, 50V, X7R 20%	0281730008
C50	CAP. .01μF, 50V, X7R 20%	0281730008
C51	CAP. .01μF, 50V, X7R 20%	0281730008
C52	CAP. .01μF, 50V, X7R 20%	0281730008
C53	CAP. .01μF, 50V, X7R 20%	0281730008
C54	CAP. .01μF, 50V, X7R 20%	0281730008
C55	CAP. .01μF, 50V, X7R 20%	0281730008
C56	CAP. .01μF, 50V, X7R 20%	0281730008
C57	CAP. .01μF, 50V, X7R 20%	0281730008
C58	CAP. .01μF, 50V, X7R 20%	0281730008
C59	CAP. .01μF, 50V, X7R 20%	0281730008
C60	CAP. .01μF, 50V, X7R 20%	0281730008
C61	CAP. .01μF, 50V, X7R 20%	0281730008
C62	CAP. .01μF, 50V, X7R 20%	0281730008
C63	CAP. .01μF, 50V, X7R 20%	0281730008
C64	CAP. .01μF, 50V, X7R 20%	0281730008
C65	CAP. .01μF, 50V, X7R 20%	0281730008
C66	CAP. .01μF, 50V, X7R 20%	0281730008
C67	CAP. .01μF, 50V, X7R 20%	0281730008
C68	CAP. .01μF, 50V, X7R 20%	0281730008
C69	CAP. .01μF, 50V, X7R 20%	0281730008
C70	CAP. .01μF, 50V, X7R 20%	0281730008
C71	CAP. .01μF, 50V, X7R 20%	0281730008
C72	CAP. .01μF, 50V, X7R 20%	0281730008
C73	CAP. .01μF, 50V, X7R 20%	0281730008
C74	CAP. .01μF, 50V, X7R 20%	0281730008
C75	CAP. .01μF, 50V, X7R 20%	0281730008
C76	CAP. .01μF, 50V, X7R 20%	0281730008
C77	CAP. .01μF, 50V, X7R 20%	0281730008
C78	CAP. .01μF, 50V, X7R 20%	0281730008
C79	CAP. .01μF, 50V, X7R 20%	0281730008
C80	CAP. .01μF, 50V, X7R 20%	0281730008
C81	CAP. .01μF, 50V, X7R 20%	0281730008
J1	HEADER, PIN STRIP, 22 PIN	1010930010
J2	HEADER, PIN STRIP, 22 PIN	1010930010
J3	HEADER, PIN STRIP, 22 PIN	1010930010
J4	HEADER, PIN STRIP, 22 PIN	1010930010
J5	HEADER, PIN STRIP, 22 PIN	1010930010
J6	HEADER, PIN STRIP, 22 PIN	1010930010
J7	HEADER, PIN STRIP, 22 PIN	1010930010
RP1	RES NTWK 10 PIN SIP 680 COM	1010640003
RP2	RES NTWK 10 PIN SIP 680 COM	1010640003
RP3	RES NTWK 10 PIN SIP 680 COM	1010640003
RP4	RES NTWK 10 PIN SIP 680 COM	1010640003
RP5	RES NTWK 10 PIN SIP 680 COM	1010640003
RP6	RES NTWK 10 PIN SIP 680 COM	1010640003
RP7	RES NTWK 10 PIN SIP 680 COM	1010640003
RP8	RES NTWK 10 PIN SIP 680 COM	1010640003
RP9	RES NTWK 10 PIN SIP 680 COM	1010640003
RP10	RES NTWK 10 PIN SIP 680 COM	1010640003
RP11	RES NTWK 10 PIN SIP 10K COM	1006130021
U1	IC. LINEAR LM340T5	0448600005
U2	IC. DIGITAL 2501-4	1010630008
U3	IC. DIGITAL 2501-4	1010630008
U4	IC. DIGITAL 2501-4	1010630008
U5	IC. DIGITAL 2501-4	1010630008
U6	IC. DIGITAL 2501-4	1010630008
U7	IC. DIGITAL 2501-4	1010630008
U8	IC. DIGITAL UDN-2981	1006330038

Figure 5.8.7 PC Assembly, OPTOCOUPLER, 3A2A1A1, page 1 of 3.

U9	IC. DIGITAL	2501-4	1010630008
U10	IC. DIGITAL	2501-4	1010630008
U11	IC. DIGITAL	2501-4	1010630008
U12	IC. DIGITAL	2501-4	1010630008
U13	IC. DIGITAL	2501-4	1010630008
U14	IC. DIGITAL	2501-4	1010630008
U15	IC. DIGITAL	2501-4	1010630008
U16	IC. DIGITAL	2501-4	1010630008
U17	IC. DIGITAL	2501-4	1010630008
U18	IC. DIGITAL	2501-4	1010630008
U19	IC. DIGITAL	2501-4	1010630008
U20	IC. DIGITAL	2501-4	1010630008

1151BP

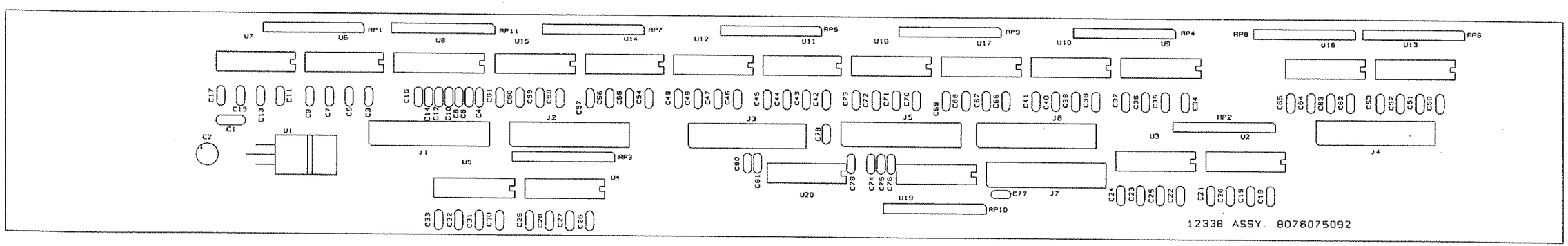

Figure 5.8.7 PC Assembly, OPTOCOUPLER, 3A2A1A1, page 2 of 3.

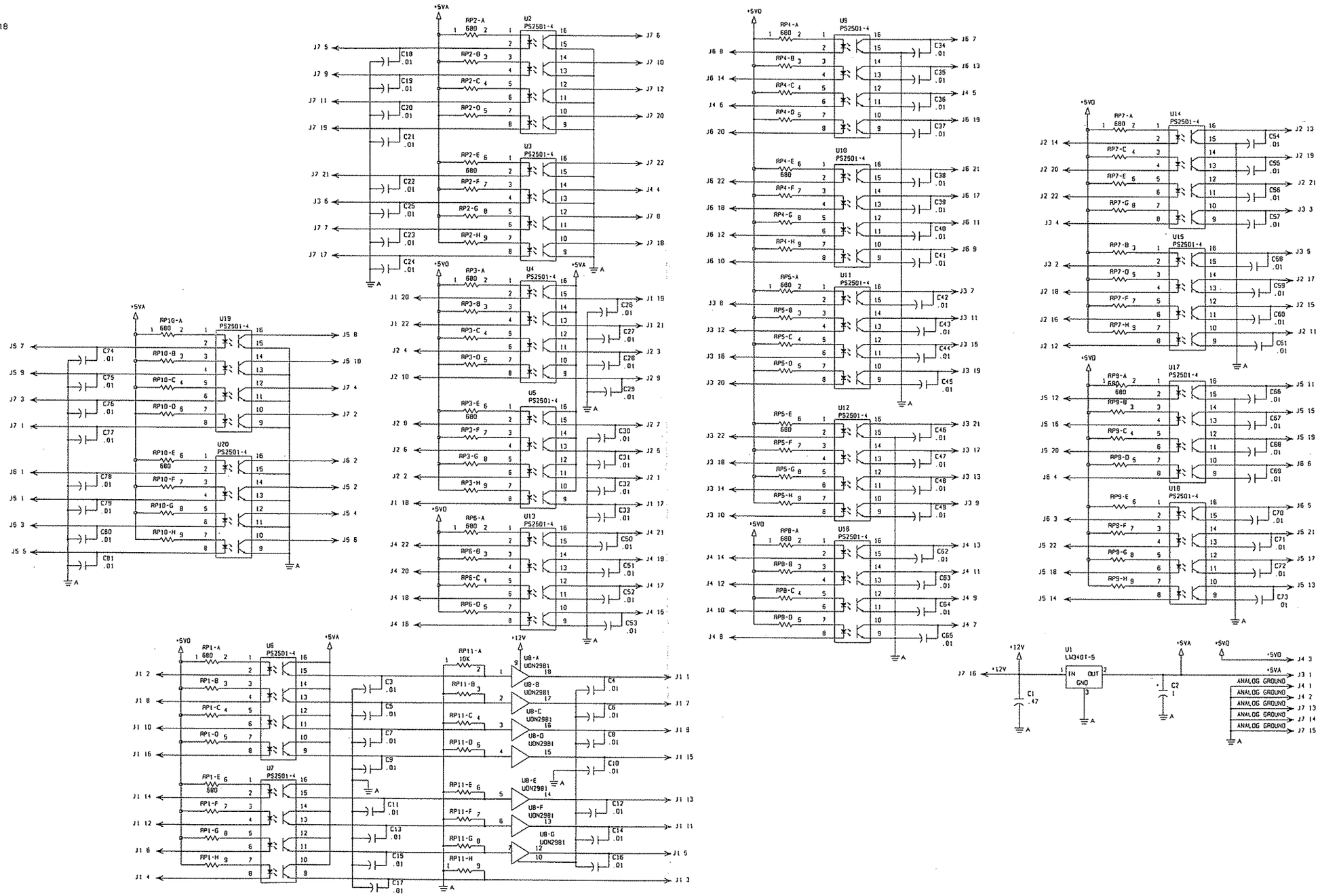

Figure 5.8.7 PC Assembly, OPTOCOUPLER, 3A2A1A1, page 3 of 3.

REV A	**PC ASSY, AUDIO R-9200**	**8102090090**
C1	CAP. 1UF, 35V	0281660000
C2	CAP. 0.1UF, 50V, X7R	1011180014
C3	CAP. 2.2UF, 35V	0273950002
C4	CAP. 0.01UF, 50V, X7R, 20%	0281730008
C5	CAP. 0.01UF, 50V, X7R, 20%	0281730008
C6	CAP. 2.2UF, 35V	0273950002
C7	CAP. 0.01UF, 50V, X7R, 20%	0281730008
C8	CAP. 0.01UF, 50V, X7R, 20%	0281730008
C9	CAP. 2.2UF, 35V	0273950002
C10	CAP. 0.01UF, 50V, X7R, 20%	0281730008
C11	CAP. 0.01UF, 50V, X7R, 20%	0281730008
C12	CAP. 22UF, 15V	0296660001
C13	CAP. 0.1UF, 50V, X7R	1011180014
C14	CAP. 22UF, 15V	0296660001
C15	CAP. 0.01UF, 50V, X7R, 20%	0281730008
C16	CAP. 0.033UF, 50V, 10/20%	0281770000
C17	CAP. 0.033UF, 50V, 10/20%	0281770000
C18	CAP. 0.01UF, 50V, X7R, 20%	0281730008
C19	CAP. 0.47UF, 50V, X7R, 20%	0283377771
C20	CAP. 0.01UF, 50V, X7R, 20%	0281730008
C21	CAP. 0.033UF, 50V, 10/20%	0281770000
C22	CAP. 2.2UF, 35V	0273950002
C23	CAP. 22UF, 15V	0296660001
C31	CAP. 47UF, 35V	0282190007
C32	CAP. 0.1UF, 50V, X7R	1011180014
C33	CAP. 6.8UF, 20V	0296780006
C34	CAP. 0.47UF, 50V, X7R, 20%	0283377771
C35	CAP. 0.47UF, 50V, X7R, 20%	0283377771
C36	CAP. 470UF, 50V	0280890001
C37	CAP. 1UF, 35V	0281660000
C38	CAP. 0.0056UF, 100V, NPO, 5%	1010770004
C39	CAP. 0.0056UF, 100V, NPO, 5%	1010770004
C40	CAP. 22UF, 15V	0296660001
C41	CAP. 22UF, 15V	0296660001
C44	CAP. 1UF, 35V	0281660000
C45	CAP. 0.47UF, 50V, X7R, 20%	0283377771
C46	CAP. 0.47UF, 50V, X7R, 20%	0283377771
C47	CAP. 22UF, 15V	0296660001
C48	CAP. 15UF, 35V	0282240004
C49	CAP. 820PF, 300V, DM15, 5%	0288750004
C50	CAP. 22UF, 15V	0296660001
C51	CAP. 0.47UF, 50V, X7R, 20%	0283377771
C52	CAP. 0.47UF, 50V, X7R, 20%	0283377771
C53	CAP. 1UF, 35V	0281660000
C54	CAP. 22UF, 15V	0296660001
C55	CAP. 22UF, 15V	0296660001
C56	CAP. 820PF, 300V, DM15, 5%	0288750004
C57	CAP. 15UF, 35V	0282240004

C58	CAP. 0.1UF, 50V, X7R	1011180014
C59	CAP. 0.1UF, 50V, X7R	1011180014
C62	CAP. 0.1UF, 50V, X7R	1011180014
C63	CAP. 0.1UF, 50V, X7R	1011180014
C64	CAP. 0.1UF, 50V, X7R	1011180014
C65	CAP. 0.1UF, 50V, X7R	1011180014
C66	CAP. 0.1UF, 50V, X7R	1011180014
C67	CAP. 1UF, 35V	0281660000
C68	CAP. 1UF, 35V	0281660000
C69	CAP. 0.1UF, 50V, X7R	1011180014
C70	CAP. 6.8UF, 20V	0296780006
C71	CAP. 6.8UF, 20V	0296780006
C72	CAP. 6.8UF, 20V	0296780006
C73	CAP. 22UF, 15V	0296660001
C74	CAP. 22UF, 15V	0296660001
C75	CAP. 22UF, 15V	0296660001
C76	CAP. 6.8UF, 20V	0296780006
C78	CAP. 0.01UF, 50V, X7R, 20%	0281730008
C79	CAP. 0.01UF, 50V, X7R, 20%	0281730008
C80	CAP. 0.01UF, 50V, X7R, 20%	0281730008
C81	CAP. 0.01UF, 50V, X7R, 20%	0281730008
C82	CAP. 0.1UF, 50V, X7R	1011180014
C83	CAP. 0.1UF, 50V, X7R	1011180014
C84	CAP. 0.1UF, 50V, X7R	1011180014
C85	CAP. 0.1UF, 50V, X7R	1011180014
C86	CAP. 0.01UF, 50V, X7R, 20%	0281730008
C88	CAP. 0.01UF, 50V, X7R, 20%	0281730008
C89	CAP. 0.01UF, 50V, X7R, 20%	0281730008
C90	CAP. 0.1UF, 50V, X7R	1011180014
C91	CAP. 0.1UF, 50V, X7R	1011180014
C92	CAP. 0.1UF, 50V, X7R	1011180014
C93	CAP. 0.01UF, 50V, X7R, 20%	0281730008
C94	CAP. 0.01UF, 50V, X7R, 20%	0281730008
C95	CAP. 0.01UF, 50V, X7R, 20%	0281730008
C96	CAP. 0.01UF, 50V, X7R, 20%	0281730008
C97	CAP. 0.1UF, 50V, X7R	1011180014
C98	CAP. 0.1UF, 50V, X7R	1011180014
C99	CAP. 0.01UF, 50V, X7R, 20%	0281730008
C100	CAP. 0.01UF, 50V, X7R, 20%	0281730008
C101	CAP. 0.01UF, 50V, X7R, 20%	0281730008
C102	CAP. 0.1UF, 50V, X7R	1011180014
C103	CAP. 0.1UF, 50V, X7R	1011180014
C104	CAP. 0.1UF, 50V, X7R	1011180014
C105	CAP. 0.1UF, 50V, X7R	1011180014
C106	CAP. 0.0033UF, 100V, NPO, 10%	0282580000
C107	CAP. 220PF, 500V, DM10, 2%	1010870009
C108	CAP. 0.01UF, 50V, X7R, 20%	0281730008
C109	CAP. 1UF, 35V	0281660000
C110	CAP. 0.1UF, 50V, X7R	1011180014

Figure 5.8.8 PC Assembly, Audio 3A2A2, page 1 of 12.

C111	CAP. 0.001UF, 100V, X7R, 20%	0281630003
C112	CAP. 0.0047UF, 50V, 5/10%	0281540004
C113	CAP. 0.1UF, 50V, X7R	1011180014
C114	CAP. 6.8UF, 20V	0296780006
C115	CAP. 0.01UF, 50V, X7R, 20%	0281730008
C116	CAP. 0.1UF, 50V, X7R	1011180014
C117	CAP. 10UF, 20V	1007290005
C118	CAP. 1UF, 35V	0281660000
C119	CAP. 0.01UF, 50V, X7R, 20%	0281730008
C120	CAP. 220PF, 500V, DM10, 2%	1010870009
C121	CAP. 1UF, 35V	0281660000
C122	CAP. 0.1UF, 50V, X7R	1011180014
C123	CAP. 0.001UF, 100V, X7R, 20%	0281630003
C124	CAP. 0.0047UF, 50V, 5/10%	0281540004
C125	CAP. 0.1UF, 50V, X7R	1011180014
C126	CAP. 6.8UF, 20V	0296780006
C127	CAP. 0.01UF, 50V, X7R, 20%	0281730008
C128	CAP. 0.1UF, 50V, X7R	1011180014
C129	CAP. 10UF, 20V	1007290005
C130	CAP. 1UF, 35V	0281660000
C131	CAP. 15UF, 35V	0282240004
C132	CAP. 47UF, 35V	0282190007
C133	CAP. 390PF, 500V, DM15, 2%	0281040001
C134	CAP. 0.47UF, 50V, X7R, 20%	0283377771
C135	CAP. 2.2UF, 35V	0273950002
C136	CAP. 0.01UF, 50V, X7R, 20%	0281730008
C137	CAP. 0.01UF, 50V, X7R, 20%	0281730008
C138	CAP. 0.01UF, 50V, X7R, 20%	0281730008
C139	CAP. 0.01UF, 50V, X7R, 20%	0281730008
C140	CAP. 0.001UF, 100V, X7R, 20%	0281630003
C141	CAP. 22UF, 15V	0296660001
C142	CAP. 0.1UF, 50V, X7R	1011180014
C143	CAP. 0.47UF, 50V, X7R, 20%	0283377771
C144	CAP. 0.01UF, 50V, X7R, 20%	0281730008
C145	CAP. 0.01UF, 50V, X7R, 20%	0281730008
C146	CAP. 0.01UF, 50V, X7R, 20%	0281730008
C147	CAP. 0.47UF, 50V, X7R, 20%	0283377771
C148	CAP. 22UF, 15V	0296660001
C149	CAP. 0.1UF, 50V, X7R	1011180014
C150	CAP. 0.1UF, 50V, X7R	1011180014
C151	CAP. 0.01UF, 50V, X7R, 20%	0281730008
C152	CAP. 0.01UF, 50V, X7R, 20%	0281730008
C153	CAP. 1UF, 35V	0281660000
C154	CAP. 10UF, 20V	1007290005
C155	CAP. 47UF, 35V	0282190007
C156	CAP. 47UF, 35V	0282190007
CR5	DIODE, SIGNAL, SIL. 1N4454	0405270003
CR6	DIODE, SIGNAL, SIL. 1N4454	0405270003
CR7	DIODE, SIGNAL, SIL. 1N4454	0405270003

CR8	DIODE, RECTIFIER 1N4004	0405180004
CR9	DIODE, RECTIFIER 1N4004	0405180004
CR10	DIODE, RECTIFIER 1N4004	0405180004
CR11	DIODE, RECTIFIER 1N4004	0405180004
CR13	DIODE, SIGNAL, SIL. 1N4454	0405270003
CR14	DIODE, SIGNAL, SIL. 1N4454	0405270003
CR15	DIODE, SIGNAL, SIL. 1N4454	0405270003
CR16	DIODE, RECTIFIER 1N4004	0405180004
CR17	DIODE, RECTIFIER 1N4004	0405180004
CR18	DIODE, SIGNAL, SIL. 1N4454	0405270003
CR19	DIODE, LED, RED 550-2405	1008480029
CR20	DIODE, RECTIFIER 1N4004	0405180004
CR21	DIODE, RECTIFIER 1N4004	0405180004
CR22	DIODE, SIGNAL, SIL. 1N4454	0405270003
CR23	DIODE, SIGNAL, SIL. 1N4454	0405270003
CR24	DIODE, SIGNAL, SIL. 1N4454	0405270003
CR25	DIODE, SIGNAL, SIL. 1N4454	0405270003
J1	SOCKET, BOARDMOUNT, 12 PIN	1011010127
K1	RELAY, DPDT, 12VDC	1005090009
K2	RELAY, DPDT, 12VDC	1005090009
K3	RELAY, DPDT, 12VDC	1005090009
Q3	TRANSISTOR, NPN, SI. 2N4124	0448010003
Q4	TRANSISTOR, NPN, SI. 2N2222A	0448580004
Q5	TRANSISTOR, NPN, SI. 2N2222A	0448580004
Q6	TRANSISTOR, NPN, SI. 2N4124	0448010003
Q7	TRANSISTOR, NPN, SI. 2N4124	0448010003
Q8	TRANSISTOR, N-CH, FET 2N7000	1011050013
Q9	TRANSISTOR, N-CH, FET 2N7000	1011050013
Q10	TRANSISTOR, N-CH, FET 2N7000	1011050013
R1	RESISTOR 10K, 5%, 1/8W	1010801031
R2	RESISTOR 10K, 5%, 1/8W	1010801031
R3	RESISTOR 39K, 5%, 1/8W	1010803930
R4	RESISTOR 47K, 5%, 1/8W	1010804731
R5	RESISTOR 47K, 5%, 1/8W	1010804731
R6	RESISTOR 47K, 5%, 1/8W	1010804731
R7	RESISTOR 1.5K, 5%, 1/8W	1010801520
R8	RESISTOR 180K, 5%, 1/8W	1010801848
R9	RESISTOR 47K, 5%, 1/8W	1010804731
R10	RESISTOR 3.3K, 5%, 1/8W	1010803328
R11	RESISTOR 180K, 5%, 1/8W	1010801848
R12	RESISTOR 68K, 5%, 1/8W	1010806831
R13	RESISTOR 2.2K, 5%, 1/8W	1010802224
R14	RESISTOR 180K, 5%, 1/8W	1010801848
R15	RESISTOR 10K, 5%, 1/8W	1010801031
R16	RESISTOR 10K, 5%, 1/8W	1010801031
R17	RESISTOR 10K, 5%, 1/8W	1010801031
R18	RESISTOR 3.3K, 5%, 1/8W	1010803328
R19	RESISTOR 3.3M, 5%, 1/4W	1010820001
R20	RESISTOR 3.3K, 5%, 1/8W	1010803328

Figure 5.8.8 PC Assembly, Audio 3A2A2, page 2 of 12.

R21	RESISTOR 330K, 5%, 1/8W	1010803344
R22	RESISTOR 1K, 5%, 1/8W	1010801023
R23	RESISTOR 1K, 5%, 1/8W	1010801023
R24	RESISTOR 47K, 5%, 1/8W	1010804731
R25	RESISTOR 100K, 5%, 1/8W	1010801040
R26	RESISTOR 100K, 5%, 1/8W	1010801040
R27	RESISTOR 100K, 5%, 1/8W	1010801040
R28	RESISTOR 100K, 5%, 1/8W	1010801040
R29	RESISTOR 330K, 5%, 1/8W	1010803344
R30	RESISTOR 270K, 5%, 1/8W	1010802747
R31	RESISTOR 3.3M, 5%, 1/4W	1010820001
R32	POT. 10K, 10%, 3/4W, 15 TURNS	0338490043
R33	RESISTOR 1M, 10%, 1/4W	0170650006
R34	RESISTOR 10K, 5%, 1/8W	1010801031
R35	RESISTOR 10K, 5%, 1/8W	1010801031
R36	RESISTOR 330K, 5%, 1/8W	1010803344
R52	RESISTOR 100K, 5%, 1/8W	1010801040
R53	RESISTOR 470, 10%, 1/2W	0173900003
R54	RESISTOR 18, 5%, 1/2W	0184730007
R55	RESISTOR 1, 10%, 1/2W	0194770001
R56	RESISTOR 33, 10%, 1W	0165660007
R57	RESISTOR 1K, 5%, 1/8W	1010801023
R59	RESISTOR 1K, 5%, 1/8W	1010801023
R60	RESISTOR 10K, 5%, 1/8W	1010801031
R61	RESISTOR 10K, 5%, 1/8W	1010801031
R62	POT. 10K, 10%, 3/4W, 15 TURNS	0338490043
R63	RESISTOR 56.2K, 1%, 1/8W	1008910015
R64	THERMISTOR 1K AT 25C	0196110009
R65	RESISTOR 12.1K, 1%, 1/8W	1008900010
R66	RESISTOR 390, 5%, 1/8W	1010803913
R67	RESISTOR 28.7K, 1%, 1/8W	1004090005
R68	RESISTOR 28.7K, 1%, 1/8W	1004090005
R69	RESISTOR 4.99K, 1%, 1/8W	1005510032
R70	RESISTOR 10K, 5%, 1/8W	1010801031
R71	RESISTOR 10K, 5%, 1/8W	1010801031
R72	RESISTOR 10K, 5%, 1/8W	1010801031
R73	RESISTOR 2.2K, 5%, 1/8W	1010802224
R74	RESISTOR 10K, 5%, 1/8W	1010801031
R75	RESISTOR 10K, 5%, 1/8W	1010801031
R76	RESISTOR 10K, 5%, 1/8W	1010801031
R77	RESISTOR 10K, 5%, 1/8W	1010801031
R78	RESISTOR 4.7K, 5%, 1/8W	1010804723
R79	POT. 10K, 10%, 3/4W, 15 TURNS	0338490043
R80	RESISTOR 4.7K, 5%, 1/8W	1010804723
R81	RESISTOR 10K, 5%, 1/8W	1010801031
R82	RESISTOR 10K, 5%, 1/8W	1010801031
R83	RESISTOR 4.7K, 5%, 1/8W	1010804723
R84	RESISTOR 47K, 5%, 1/8W	1010804731
R85	POT. 10K, 10%, 3/4W, 15 TURNS	0338490043

R86	RESISTOR 10K, 5%, 1/8W	1010801031
R87	RESISTOR 33K, 5%, 1/8W	1010803336
R88	RESISTOR 10K, 5%, 1/8W	1010801031
R89	RESISTOR 10K, 5%, 1/8W	1010801031
R90	RESISTOR 22, 5%, 1/8W	1010802208
R91	RESISTOR 2.2K, 5%, 1/8W	1010802224
R92	RESISTOR 56K, 5%, 1/8W	1010805631
R93	RESISTOR 47K, 5%, 1/8W	1010804731
R94	RESISTOR 100K, 5%, 1/8W	1010801040
R95	RESISTOR 100K, 5%, 1/8W	1010801040
R96	RESISTOR 2.7K, 5%, 1/8W	1010802721
R96	RESISTOR 100K, 5%, 1/8W	1010801040
R97	RESISTOR 100K, 5%, 1/8W	1010801040
R98	RESISTOR 47K, 5%, 1/8W	1010804731
R99	POT. 10K, 10%, 3/4W, 15 TURNS	0338490043
R100	RESISTOR 10K, 5%, 1/8W	1010801031
R101	RESISTOR 33K, 5%, 1/8W	1010803336
R102	RESISTOR 10K, 5%, 1/8W	1010801031
R103	RESISTOR 10K, 5%, 1/8W	1010801031
R104	RESISTOR 22, 5%, 1/8W	1010802208
R105	RESISTOR 2.2K, 5%, 1/8W	1010802224
R106	RESISTOR 56K, 5%, 1/8W	1010805631
R107	RESISTOR 10K, 5%, 1/8W	1010801031
R108	RESISTOR 10K, 5%, 1/8W	1010801031
R109	RESISTOR 10K, 5%, 1/8W	1010801031
R110	RESISTOR 100K, 5%, 1/8W	1010801040
R111	RESISTOR 100K, 5%, 1/8W	1010801040
R112	RESISTOR 100K, 5%, 1/8W	1010801040
R113	RESISTOR 100K, 5%, 1/8W	1010801040
R116	RESISTOR 100K, 5%, 1/8W	1010801040
R117	RESISTOR 100K, 5%, 1/8W	1010801040
R118	RESISTOR 39K, 5%, 1/8W	1010803930
R119	RESISTOR 10K, 5%, 1/8W	1010801031
R120	RESISTOR 10K, 5%, 1/8W	1010801031
R121	RESISTOR 4.7K, 5%, 1/8W	1010804723
R122	RESISTOR 18K, 5%, 1/8W	1010801830
R123	RESISTOR 1K, 5%, 1/8W	1010801023
R124	RESISTOR 47K, 5%, 1/8W	1010804731
R125	POT. 1K, 10%, 1/2W, 4 TURNS	1000850021
R126	RESISTOR 1K, 5%, 1/8W	1010801023
R127	RESISTOR 1K, 5%, 1/8W	1010801023
R128	RESISTOR 1K, 10%, 1/4W	0171560001
R129	RESISTOR 100K, 5%, 1/8W	1010801040
R130	RESISTOR 10K, 5%, 1/8W	1010801031
R131	RESISTOR 10K, 5%, 1/8W	1010801031
R132	RESISTOR 10K, 5%, 1/8W	1010801031
R133	RESISTOR 1M, 10%, 1/4W	0170650006
R134	RESISTOR 47K, 5%, 1/8W	1010804731
R135	RESISTOR 120K, 5%, 1/8W	1010801244

Figure 5.8.8 PC Assembly, Audio 3A2A2, page 3 of 12.

R136	POT. 10K, 10%, 1/2W, 25 TURNS	1004880014
R137	RESISTOR 10K, 5%, 1/8W	1010801031
R138	RESISTOR 10K, 5%, 1/8W	1010801031
R139	RESISTOR 4.7K, 5%, 1/8W	1010804723
R141	RESISTOR 100, 5%, 1/8W	1010801015
R142	RESISTOR 1K, 5%, 1/8W	1010801023
R143	RESISTOR 1K, 5%, 1/8W	1010801023
R144	RESISTOR 1K, 5%, 1/8W	1010801023
R145	RESISTOR 820, 5%, 1/8W	1010808214
R146	RESISTOR 100, 5%, 1/8W	1010801015
R147	RESISTOR 1.2K, 5%, 1/8W	1010801228
R148	RESISTOR 10K, 5%, 1/8W	1010801031
R149	RESISTOR 2.7K, 5%, 1/8W	1010802721
R150	RESISTOR 1.2K, 5%, 1/8W	1010801228
R151	RESISTOR 2.7K, 5%, 1/8W	1010802721
R152	RESISTOR 47K, 5%, 1/8W	1010804731
R153	RESISTOR 47K, 5%, 1/8W	1010804731
R154	RESISTOR 3.3K, 5%, 1/8W	1010803328
R155	RESISTOR 4.7K, 5%, 1/8W	1010804723
R156	RESISTOR 4.7K, 5%, 1/8W	1010804723
R157	RESISTOR 47K, 5%, 1/8W	1010804731
R159	RESISTOR 1K, 5%, 1/8W	1010801023
R160	RESISTOR 1K, 5%, 1/8W	1010801023
R161	RESISTOR 1K, 5%, 1/8W	1010801023
R162	RESISTOR 820, 5%, 1/8W	1010808214
R163	RESISTOR 100, 5%, 1/8W	1010801015
R164	RESISTOR 1.2K, 5%, 1/8W	1010801228
R165	RESISTOR 100, 5%, 1/8W	1010801015
R166	RESISTOR 10K, 5%, 1/8W	1010801031
R167	RESISTOR 2.7K, 5%, 1/8W	1010802721
R168	RESISTOR 1.2K, 5%, 1/8W	1010801228
R169	RESISTOR 2.7K, 5%, 1/8W	1010802721
R170	RESISTOR 47K, 5%, 1/8W	1010804731
R171	RESISTOR 47K, 5%, 1/8W	1010804731
R172	RESISTOR 3.3K, 5%, 1/8W	1010803328
R173	RESISTOR 4.7K, 5%, 1/8W	1010804723
R174	RESISTOR 4.7K, 5%, 1/8W	1010804723
R175	RESISTOR 47K, 5%, 1/8W	1010804731
R176	RESISTOR 150, 5%, 1/8W	1010801511
R177	RESISTOR 4.7K, 5%, 1/8W	1010804723
R178	RESISTOR 22K, 5%, 1/8W	1010802232
R179	RESISTOR 22K, 5%, 1/8W	1010802232
R180	RESISTOR 22K, 5%, 1/8W	1010802232
R181	RESISTOR 22K, 5%, 1/8W	1010802232
R182	RESISTOR 4.7K, 5%, 1/8W	1010804723
R183	RESISTOR 10K, 5%, 1/8W	1010801031
R184	RESISTOR 22K, 5%, 1/8W	1010802232
R185	RESISTOR 10K, 5%, 1/8W	1010801031
R186	RESISTOR 10K, 5%, 1/8W	1010801031

R187	RESISTOR 100K, 5%, 1/8W	1010801040
R188	RESISTOR 10K, 5%, 1/8W	1010801031
R189	RESISTOR 47K, 5%, 1/8W	1010804731
R190	RESISTOR 10K, 5%, 1/8W	1010801031
R191	RESISTOR 22K, 5%, 1/8W	1010802232
R192	RESISTOR 10K, 5%, 1/8W	1010801031
R193	POT. 25K, 10%, 3/4W, 15 TURNS	0338490094
R194	POT. 5K, 10%, 1/2W, 25 TURNS	1004720025
R195	RESISTOR 3.3K, 5%, 1/8W	1010803328
R197	RESISTOR 47K, 5%, 1/8W	1010804731
R198	RESISTOR 4.7K, 5%, 1/8W	1010804723
R199	RESISTOR 4.7K, 5%, 1/8W	1010804723
R200	RESISTOR 10K, 5%, 1/8W	1010801031
R201	RESISTOR 10K, 5%, 1/8W	1010801031
R202	RESISTOR 10K, 5%, 1/8W	1010801031
R203	RESISTOR 1K, 5%, 1/8W	1010801023
R204	RESISTOR 1K, 5%, 1/8W	1010801023
R205	RESISTOR 47, 10%, 2W	0163720002
R206	RESISTOR 2100, 1%, 1/8W	1011790009
R207	RESISTOR 243, 1%, 1/8W	1011800004
R208	RESISTOR 2.7K, 5%, 1/8W	1010802721
RP1	RES NTWK 6 PIN SIP 10K COM	1006130004
T1	TRANSFORMER, AUDIO, PC MOUNT	0491650001
T2	TRANSFORMER, AUDIO, PC MOUNT	0491650001
TP1	TEST POINT, RED	1011130033
TP2	TEST POINT, RED	1011130033
TP3	TEST POINT, RED	1011130033
TP4	TEST POINT, RED	1011130033
TP5	TEST POINT, RED	1011130033
TP6	TEST POINT, RED	1011130033
TP7	TEST POINT, RED	1011130033
U1	IC. LINEAR MC34074	1011430037
U2	IC. LINEAR MC34074	1011430037
U3	IC. LINEAR MC34074	1011430037
U4	IC. DIGITAL 4066BC	1004460023
U6	IC. DIGITAL 4066BC	1004460023
U7	IC. LINEAR TDA2008	1003140025
U8	IC. DIGITAL 4584B	1005190011
U9	IC. LINEAR MC34072	1011440032
U10	IC. LINEAR MC34072	1011440032
U11	IC. DIGITAL IH5041	1010130013
U12	IC. LINEAR MC34072	1011440032
U13	IC. LINEAR 5532	1006270019
U14	IC. LINEAR 5532	1006270019
U15	IC. DIGITAL 4066BC	1004460023
U16	IC. DIGITAL 4081B	1006280031
U17	IC. DIGITAL 4584B	1005190011
U18	IC. DIGITAL 4066BC	1004460023
U19	IC. LINEAR NE570	1011500001

Figure 5.8.8 PC Assembly, Audio 3A2A2, page 4 of 12.

U20	IC. LINEAR	MC34072	1011440032
U21	IC. DIGITAL	74HC14	1006490027
U22	IC. DIGITAL	74HC08	1006490019
U23	IC. DIGITAL	74HC00	1008190004
U24	IC. LINEAR	UDN2935Z	1010830007
U25	IC. LINEAR	UDN2935Z	1010830007
U26	IC. DIGITAL	75372	1010760017
U27	IC. DIGITAL	4066BC	1004460023
U28	IC. LINEAR	MC1596L	1010050028
U29	IC. LINEAR	MC1596L	1010050028
U30	IC. DIGITAL	4001B	1004660022
U31	IC. LINEAR	TDA1524A	1010780026
U32	IC. LINEAR	MC34074	1011430037
U33	IC. LINEAR	LM317L	1010550012
	MOUNTING PLATE, AUDIO BOARD		8076091608
	HEATSINK, SPEAKER DRIVER		8076092205

Figure 5.8.8 PC Assembly, Audio 3A2A2, page 5 of 12.

1157DP

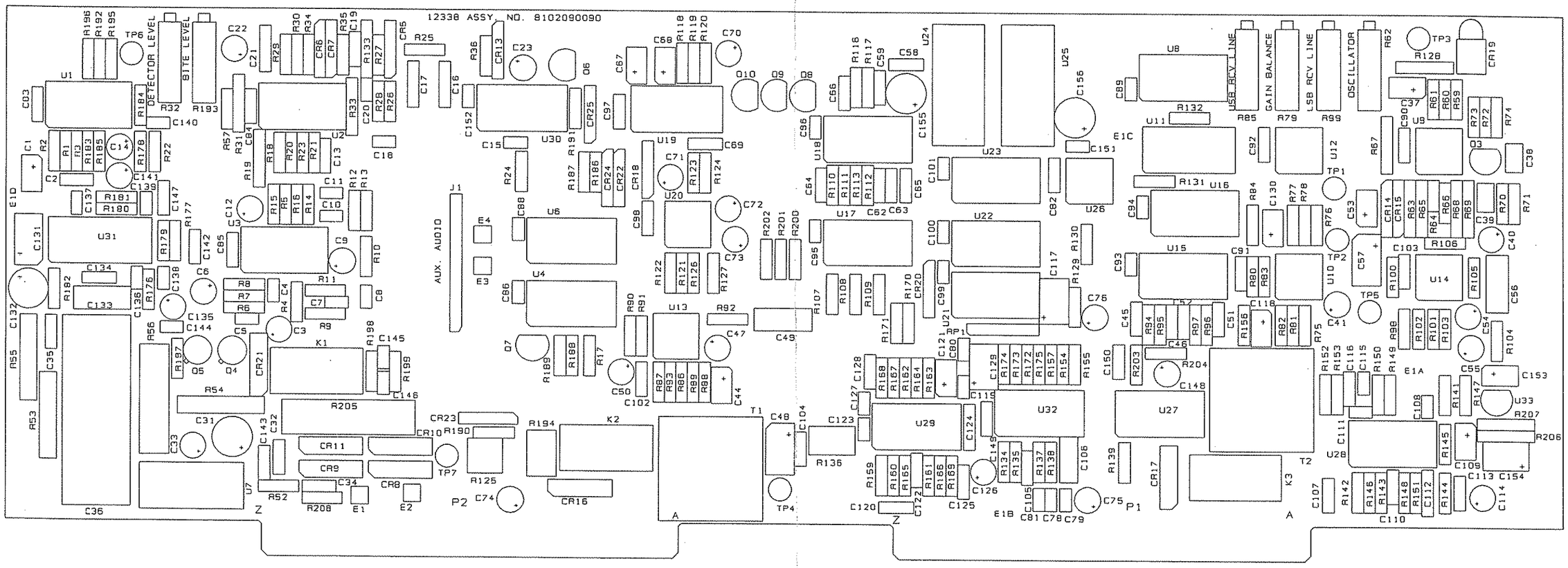

Figure 5.8.8 PC Assembly, Audio 3A2A2, page 6 of 12.

A11570

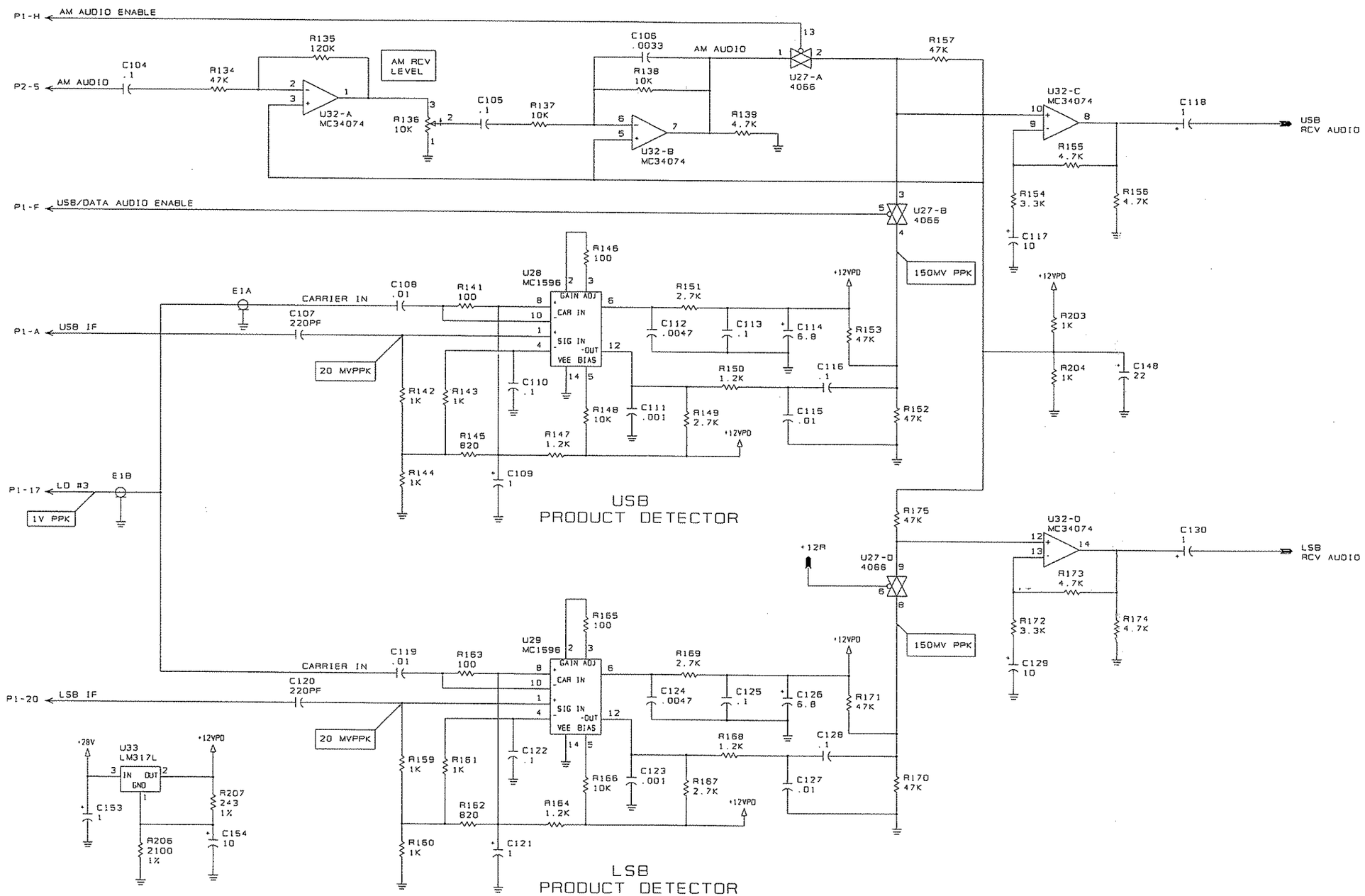

Figure 5.8.8 PC Assembly, Audio 3A2A2, page 7 of 12.

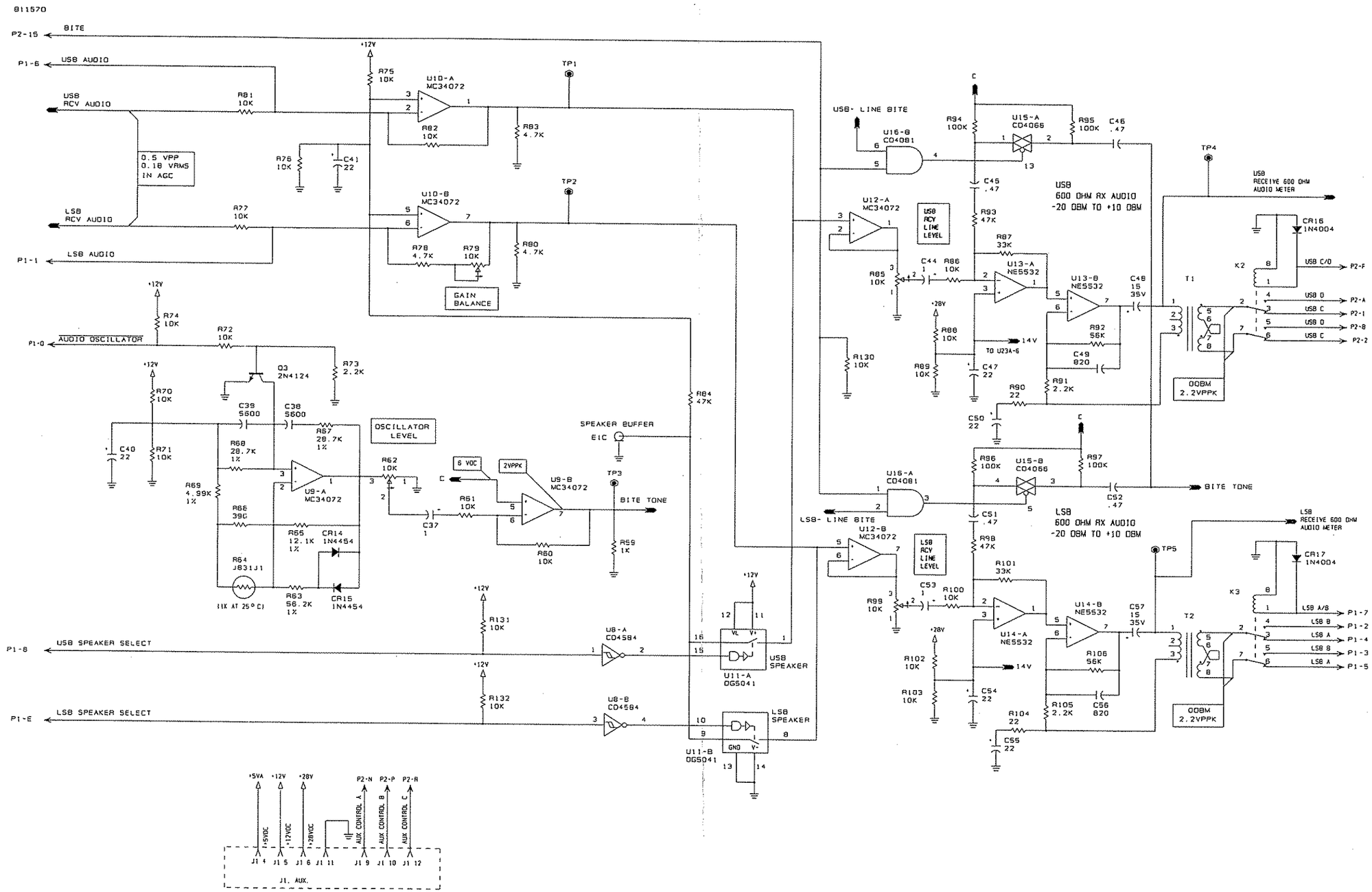

Figure 5.8.8 PC Assembly, Audio 3A2A2, page 8 of 12.

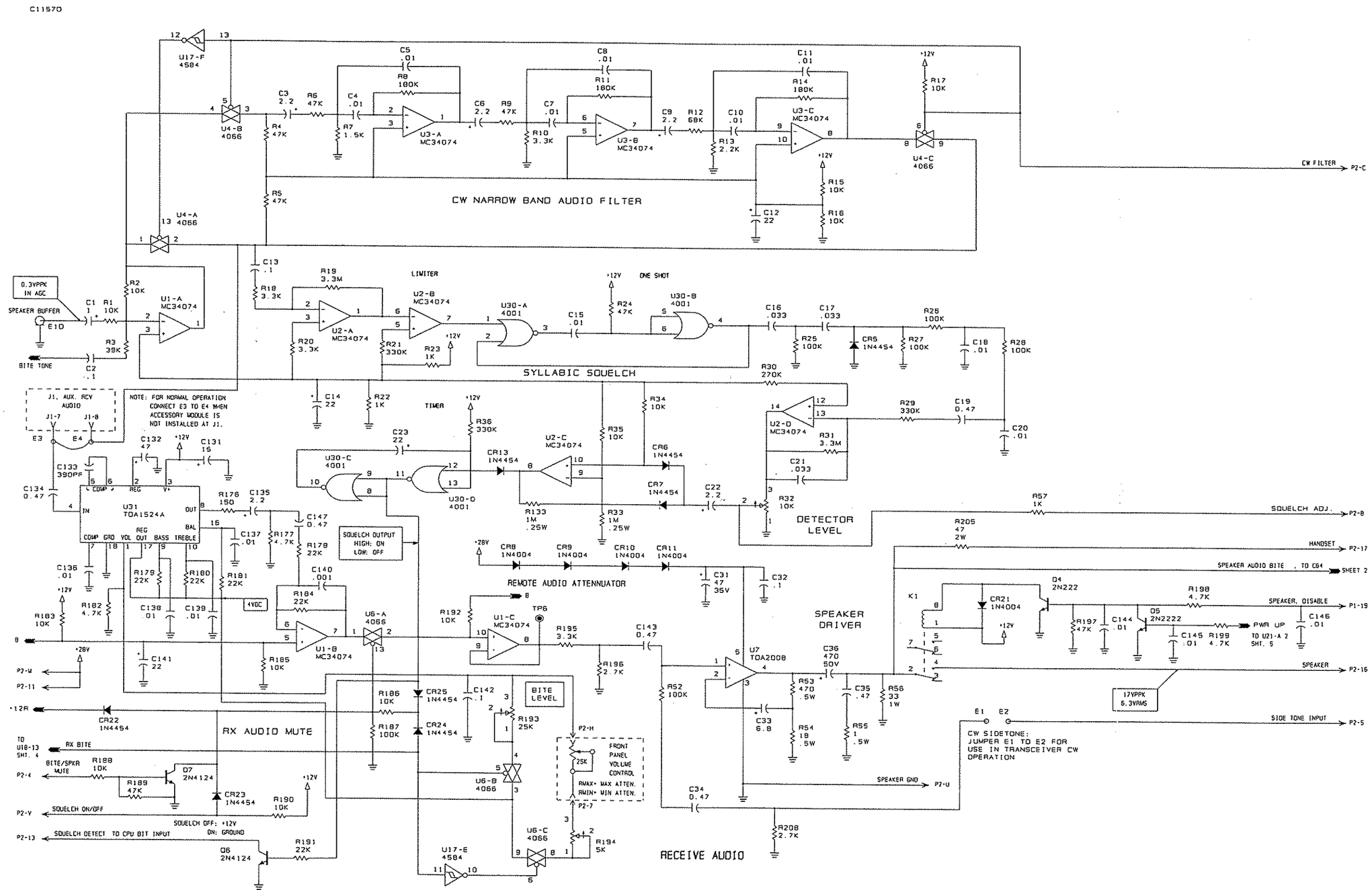

Figure 5.8.8 PC Assembly, Audio 3A2A2, page 9 of 12.

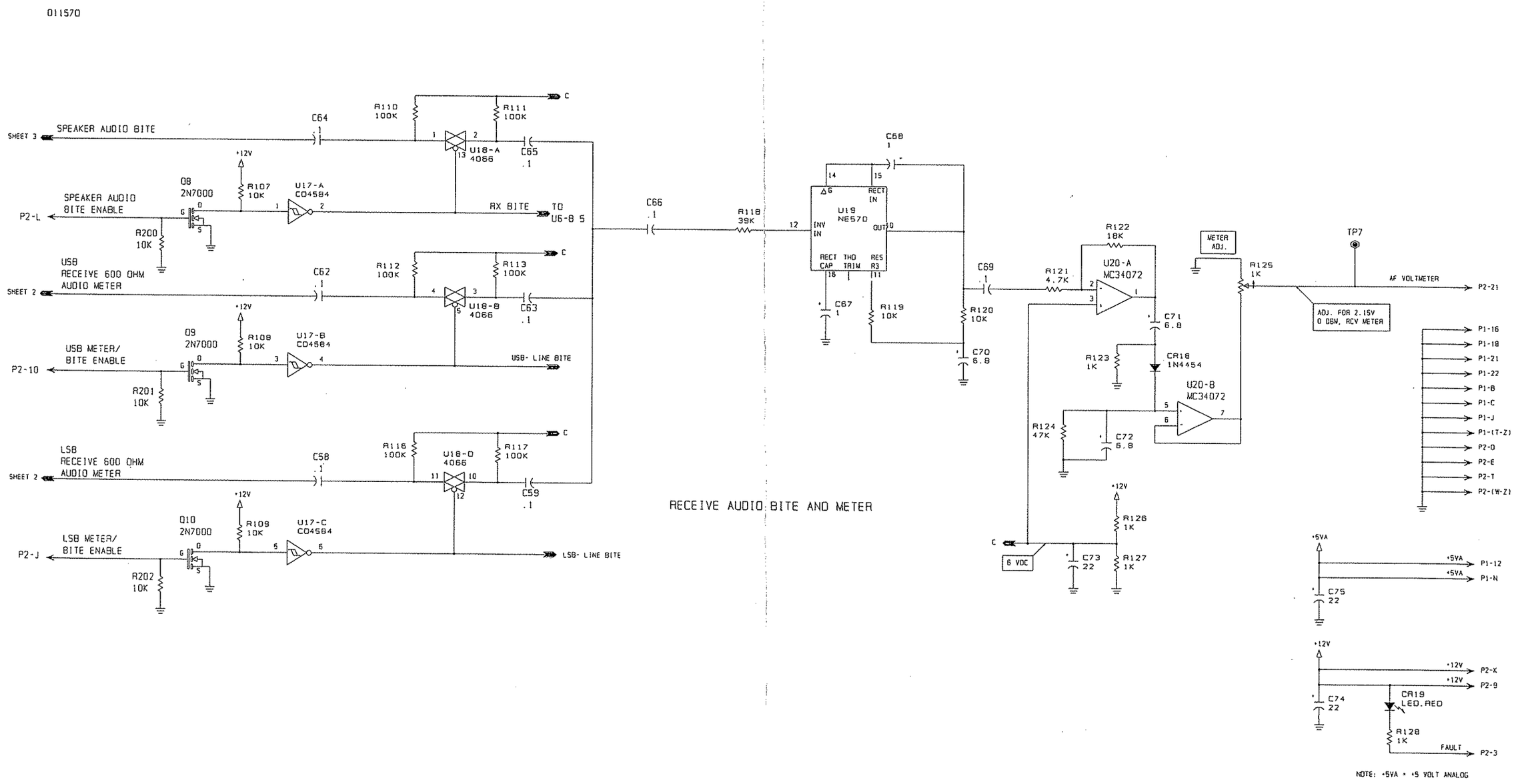

RECEIVE AUDIO BITE AND METER

Figure 5.8.8 PC Assembly, Audio 3A2A2, page 10 of 12.

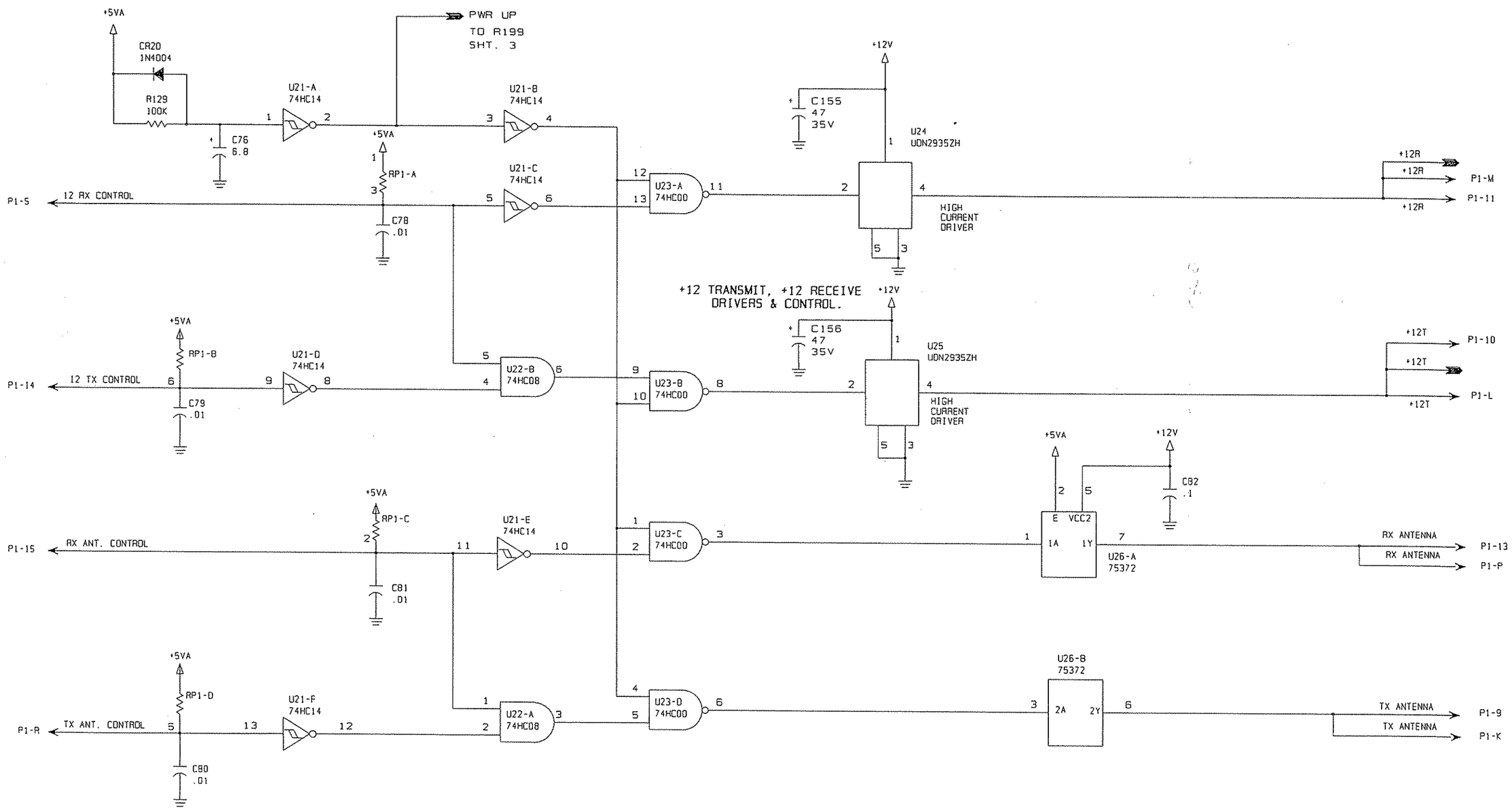

Figure 5.8.8 PC Assembly, Audio 3A2A2, page 11 of 12.

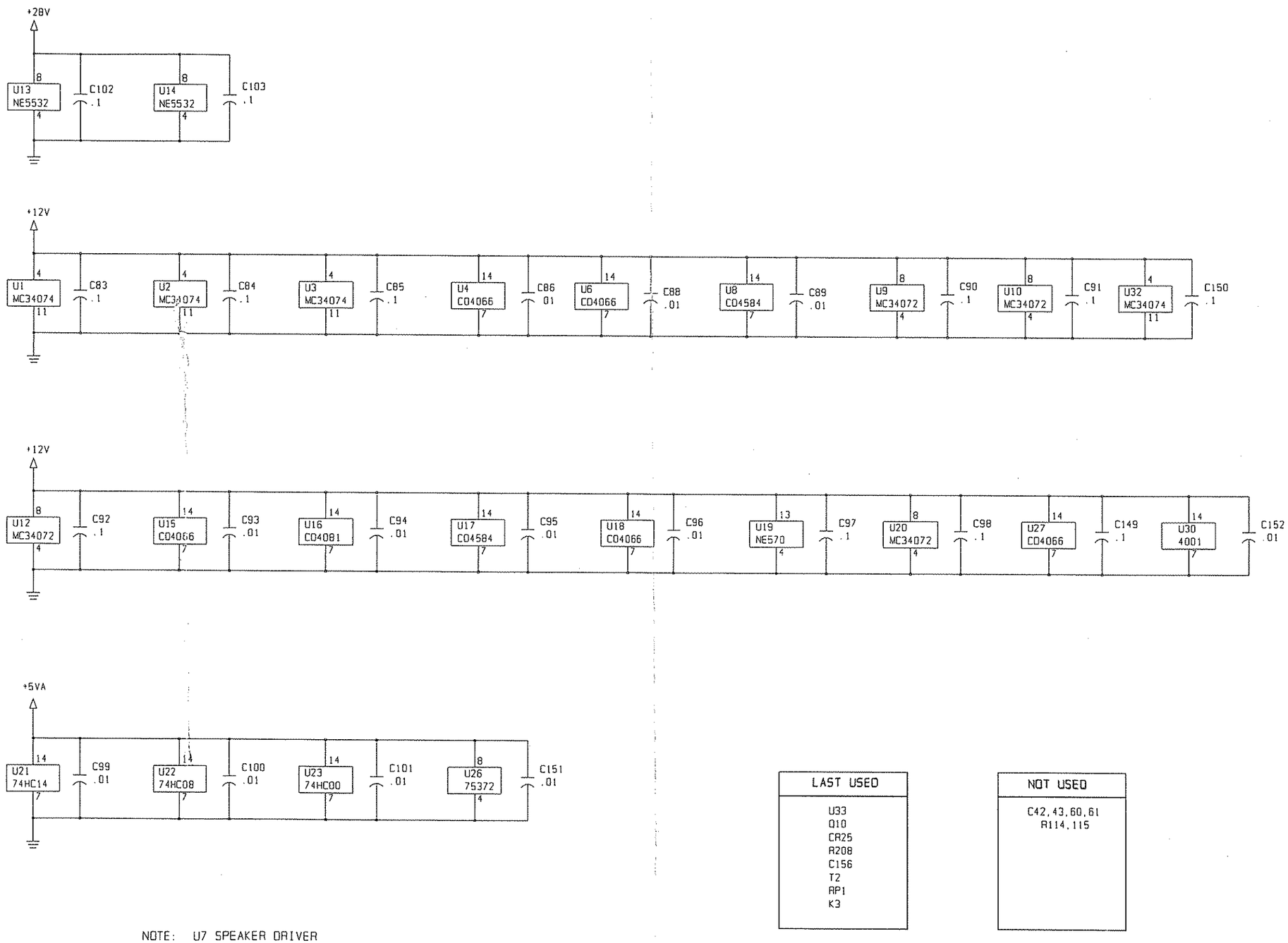

Figure 5.8.8 PC Assembly, Audio 3A2A2, page 12 of 12.

REV 01	**PC ASSY, AUDIO REMOTE**	**8078785097**
C1	CAP. 2.2UF, 35V	0273950002
C2	CAP. 1UF, 35V	0281660000
C3	CAP. 22UF, 15V	0296660001
C4	CAP. 22UF, 15V	0296660001
C5	CAP. 22UF, 15V	0296660001
C6	CAP. 0.1UF, 50V, X7R	1011180014
C7	CAP. 0.1UF, 50V, X7R	1011180014
C8	CAP. 1UF, 35V	0281660000
C9	CAP. 2.2UF, 35V	0273950002
C10	CAP. 0.1UF, 50V, X7R	1011180014
C11	CAP. 22UF, 15V	0296660001
R1	RESISTOR 1.2K, 5%, 1/8W	1010801228
R2	RESISTOR 1.2K, 5%, 1/8W	1010801228
R3	POT. 10K, 10%, 3/4W, 15 TURNS	0338490043
R4	RESISTOR 10K, 5%, 1/8W	1010801031
R5	RESISTOR 100K, 5%, 1/8W	1010801040
R6	RESISTOR 1K, 5%, 1/8W	1010801023
R7	RESISTOR 1K, 5%, 1/8W	1010801023
R8	RESISTOR 1K, 5%, 1/8W	1010801023
R9	RESISTOR 1.2K, 5%, 1/8W	1010801228
R10	RESISTOR 1.2K, 5%, 1/8W	1010801228
R11	POT. 10K, 10%, 3/4W, 15 TURNS	0338490043
R12	RESISTOR 10K, 5%, 1/8W	1010801031
R13	RESISTOR 100K, 5%, 1/8W	1010801040
R14	RESISTOR 1K, 5%, 1/8W	1010801023
SA1	DIODE, SURGE ARRESTER PMT3	1011110024
SA2	DIODE, SURGE ARRESTER PMT3	1011110024
T1	TRANSFORMER, MODEM	1011340011
T2	TRANSFORMER, MODEM	1011340011
U1	IC. LINEAR MC34074	1011430037
ZS1	VARISTOR, MOV Z150LA10B	1010950029
ZS2	VARISTOR, MOV Z150LA10B	1010950029
ZS3	VARISTOR, MOV Z150LA10B	1010950029
ZS4	VARISTOR, MOV Z150LA10B	1010950029

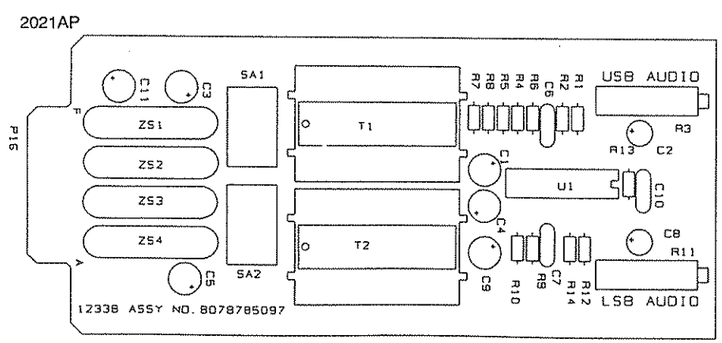

Figure 5.8.9 PC Assembly, Audio Remote 3A2A4, page 1 of 2.

A2021A

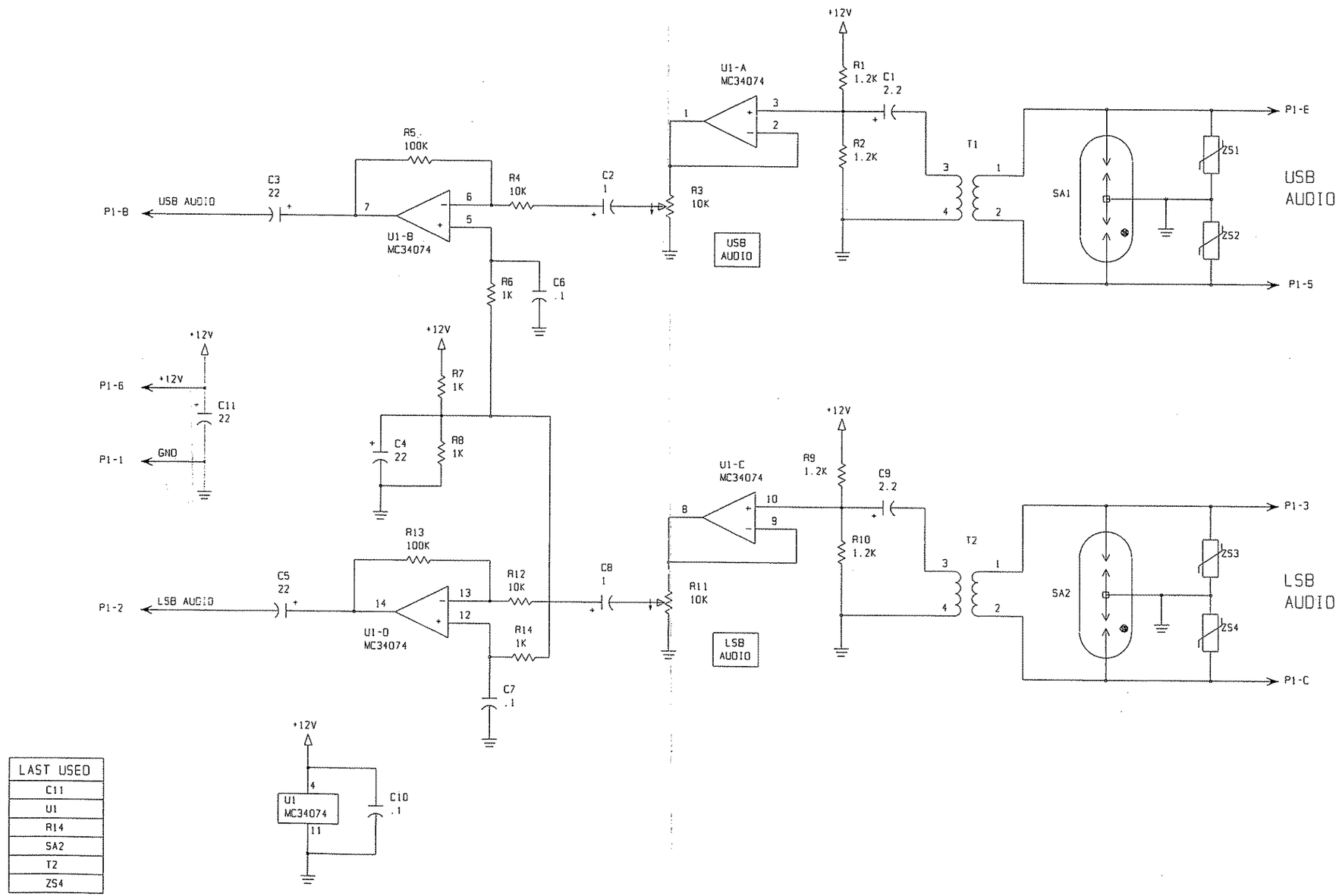

LAST USED
C11
U1
R14
SA2
T2
ZS4

Figure 5.8.9 PC Assembly, Audio Remote 3A2A4, page 2 of 2.

PC ASSY, I/O BOARD 3A2A3

	PC ASSY, I/O BOARD 3A2A3	8076110092
C1	CAP. .01µF, 50V, X7R 20%	0281730008
C2	CAP. 6.8µF, 20V, T368	0296780006
C3	CAP. .01µF, 50V, X7R 20%	0281730008
C4	CAP. .01µF, 50V, X7R 20%	0281730008
C5	CAP. .01µF, 50V, X7R 20%	0281730008
C6	CAP. .01µF, 50V, X7R 20%	0281730008
C7	CAP. .01µF, 50V, X7R 20%	0281730008
C8	CAP. .01µF, 50V, X7R 20%	0281730008
C9	CAP. 22µF, 15V, 196D	0281690006
C10	CAP. 22µF, 15V, 196D	0281690006
C11	CAP. 47µF, 20V, 196D	0281700001
C12	CAP. .01µF, 50V, X7R 20%	0281730008
C13	CAP. .01µF, 50V, X7R 20%	0281730008
C14	CAP. .01µF, 50V, X7R 20%	0281730008
C15	CAP. 10µF, 20V	1007290005
C16	CAP. 22µF, 15V, 196D	0281690006
C17	CAP. 22µF, 15V, 196D	0281690006
C18	CAP. .01µF, 50V, X7R 20%	0281730008
C19	CAP. 47µF, 20V, 196D	0281700001
C20	CAP. .01µF, 50V, X7R 20%	0281730008
C21	CAP. .01µF, 50V, X7R 20%	0281730008
C22	CAP. .01µF, 50V, X7R 20%	0281730008
C23	CAP. .01µF, 50V, X7R 20%	0281730008
C24	CAP. .01µF, 50V, X7R 20%	0281730008
C25	CAP. .01µF, 50V, X7R 20%	0281730008
C26	CAP. .01µF, 50V, X7R 20%	0281730008
C27	CAP. .01µF, 50V, X7R 20%	0281730008
C28	CAP. .01µF, 50V, X7R 20%	0281730008
C29	CAP. .01µF, 50V, X7R 20%	0281730008
C30	CAP. .01µF, 50V, X7R 20%	0281730008
C31	CAP. .01µF, 50V, X7R 20%	0281730008
C32	CAP. .01µF, 50V, X7R 20%	0281730008
C33	CAP. .01µF, 50V, X7R 20%	0281730008
C34	CAP. .01µF, 50V, X7R 20%	0281730008
C35	CAP. .01µF, 50V, X7R 20%	0281730008
CR1	DIODE, LED, RED, PC MOUNT	1008480029
CR2	DIODE, RECTIFIER 1N4004	0405180004
CR3	DIODE, RECTIFIER 1N4004	0405180004
J1	CONNECTOR, POWER, 9 PIN FEMALE	1011090015
K1	RELAY, DPDT, 12VDC	1005090009
K2	RELAY, DPDT, 12VDC	1005090009
L1	INDUCTOR, MOLDED, 33µH, 5%	0659690004
L2	INDUCTOR, MOLDED, 33µH, 5%	0659690004
L3	INDUCTOR, MOLDED, 33µH, 5%	0659690004
L4	INDUCTOR, MOLDED, 33µH, 5%	0659690004
L5	INDUCTOR, MOLDED, 33µH, 5%	0659690004
L6	INDUCTOR, MOLDED, 33µH, 5%	0659690004
L7	INDUCTOR, MOLDED, 33µH, 5%	0659690004
L8	INDUCTOR, MOLDED, 33µH, 5%	0659690004
L9	INDUCTOR, MOLDED, 33µH, 5%	0659690004

P1	CONNECTOR, HEADER 40 PIN	1010780000
P2	CONNECTOR, HEADER, 14 PIN MALE	1011210142
Q1	TRANSISTOR, NPN, SI. 2N4124	0448010003
Q2	TRANSISTOR, NPN, SI. 2N4124	0448010003
R1	RESISTOR 680, 10%, 1/4W	0176630007
R2	RESISTOR 100K, 10%, 1/4W	0170390004
R3	RESISTOR 10K, 10%, 1/4W	0170410005
R4	RESISTOR 10K, 10%, 1/4W	0170410005
R5	RESISTOR 10K, 10%, 1/4W	0170410005
R6	RESISTOR 100K, 10%, 1/4W	0170390004
R7	RESISTOR 10K, 10%, 1/4W	0170410005
R8	RESISTOR 10K, 5%, 1/8W	1010801031
R9	RESISTOR 10K, 5%, 1/8W	1010801031
R10	RESISTOR 82, 10%, 1/4W	0184610001
R11	RESISTOR 10K, 5%, 1/8W	1010801031
R12	RESISTOR 68, 5%, 1/8W	1010806807
R13	RESISTOR 68, 5%, 1/8W	1010806807
R14	RESISTOR 68, 5%, 1/8W	1010806807
R15	RESISTOR 68, 5%, 1/8W	1010806807
RP1	RES NTWK 10 PIN SIP 10K COM	1006130021
RP2	RES NTWK 10 PIN SIP 10K COM	1006130021
RP3	RES NTWK 10 PIN SIP 10K COM	1006130021
U1	CRYSTAL OSCILLATOR, 7.3728MHZ	1008850012
U2	IC. DIGITAL 74HC00	1008190004
U3	IC. DIGITAL 74HC00	1008190004
U4	IC. DIGITAL 4078B	1010460030
U5	IC. DIGITAL 74HC374	1006450033
U6	IC. DIGITAL 74HC374	1006450033
U7	IC. DIGITAL 74HC04	1010280023
U8	IC. DIGITAL 74HC32	1006470026
U9	IC. DIGITAL 2681	1008790010
U10	IC. DIGITAL 80C85A	1007400013
U11	IC. DIGITAL 74HC138	1006480013
U12	IC. DIGITAL 74HC125	1008810011
U13	IC. DIGITAL 74HC373	1006480030
U14	IC. DIGITAL 74HC32	1006470026
U15	IC. DIGITAL RAM UPD446D	1006430008
U16	IC. DIGITAL ICL232	1010510011
U17	IC. DIGITAL ICL232	1010510011
U18	IC. DIGITAL 75176	1011100011
U19	IC. DIGITAL 75176	1011100011
U20	EPROM, W/IO SOFTWARE RCU-9310R	8076113296
XU9	SOCKET, IC, 40 PIN TAILLESS	1006620010
XU10	SOCKET, IC, 40 PIN TAILLESS	1006620010
XU20	SOCKET, IC, 28 PIN TAILLESS	1006620001
	FERRITE BEAD, 850 PERM	1010410032
	MOUNTING PLATE, I/O BOARD	8076111200

NOTE: U20 EPROM is not part of PC ASSY I/O BOARD 3A2A3 P/N 8076110092.

Figure 5.8.10 PC Assembly, I/O Board 3A2A3, page 1 of 4.

1079P

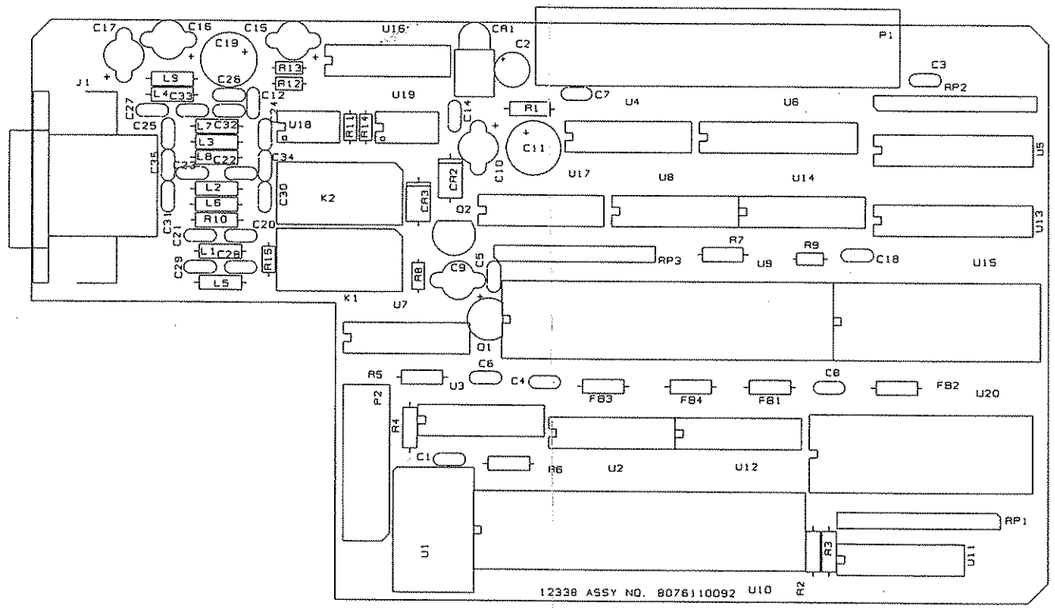

Figure 5.8.10 PC Assembly, I/O Board 3A2A3, page 2 of 4.

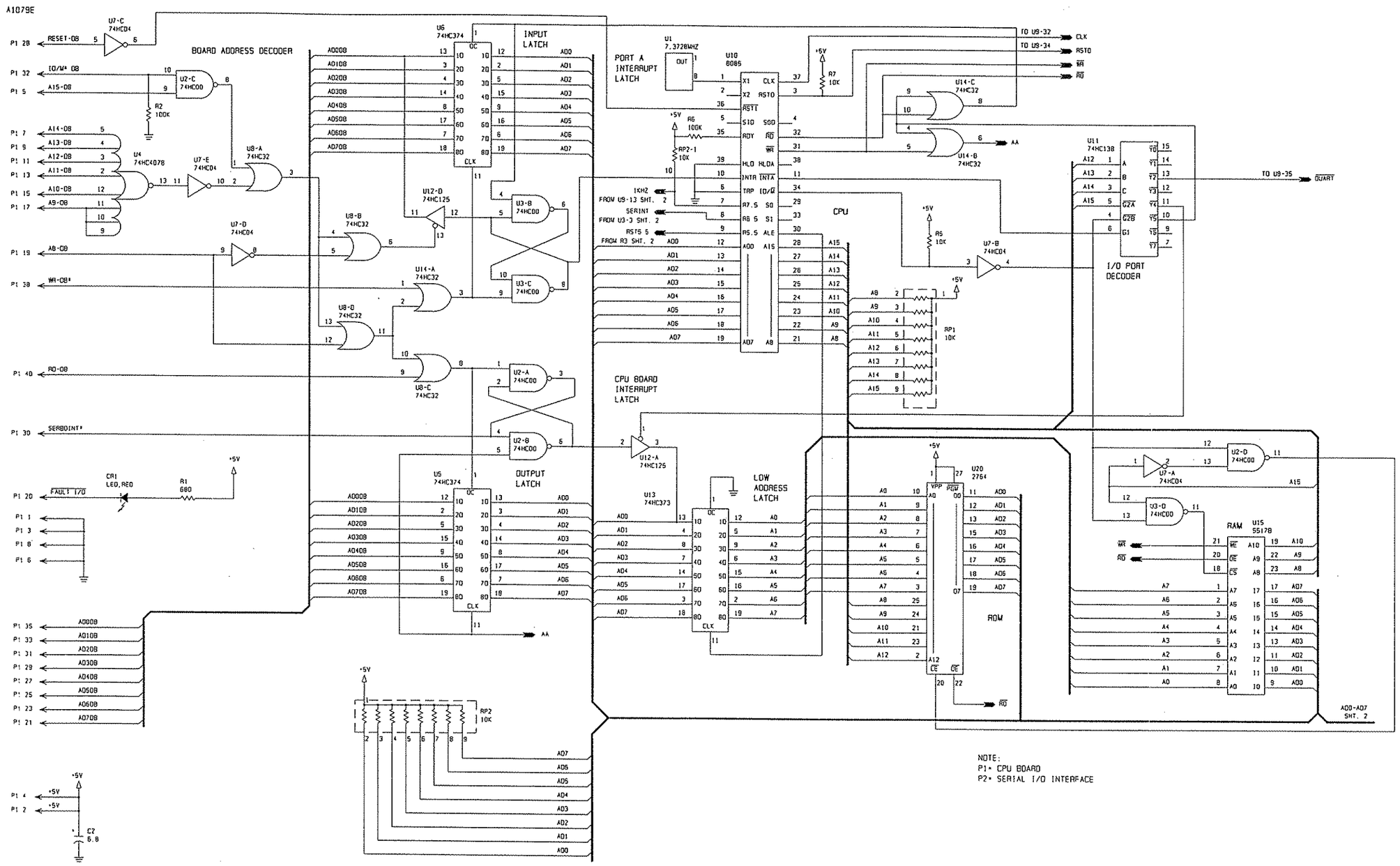

Figure 5.8.10 PC Assembly, I/O Board 3A2A3, page 3 of 4.

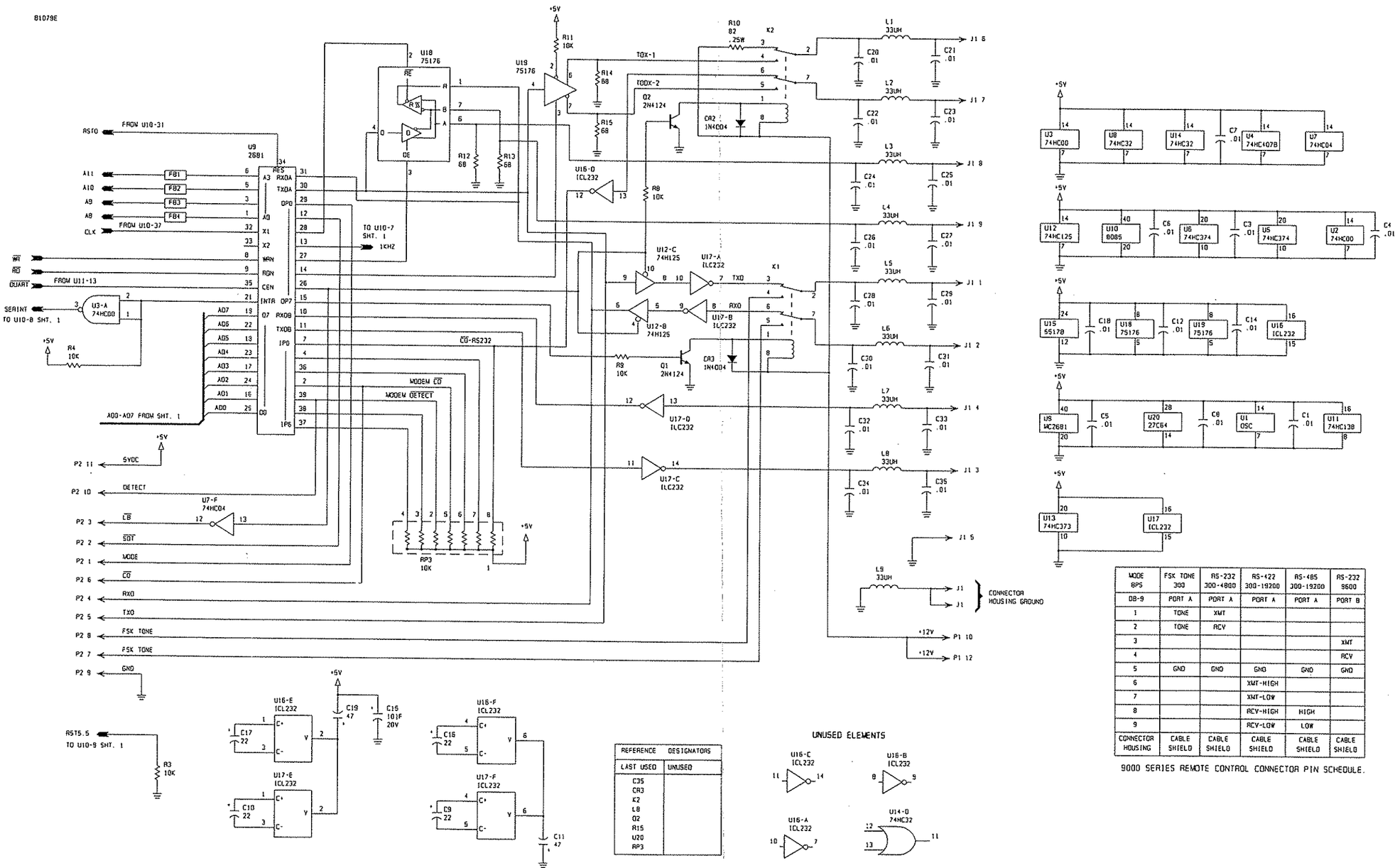

REFERENCE DESIGNATORS	
LAST USED	UNUSED
C35	
CR3	
K2	
L8	
Q2	
R15	
U20	
RP3	

MODE BPS	FSK TONE 300	RS-232 300-4800	RS-422 300-19200	RS-485 300-19200	RS-232 9600
DB-9	PORT A	PORT A	PORT A	PORT A	PORT B
1	TONE	XMT			
2	TONE	RCV			
3					XMT
4					RCV
5	GND	GND	GND	GND	GND
6			XMT-HIGH		
7			XMT-LOW		
8			RCV-HIGH	HIGH	
9			RCV-LOW	LOW	
CONNECTOR HOUSING	CABLE SHIELD	CABLE SHIELD	CABLE SHIELD	CABLE SHIELD	CABLE SHIELD

9000 SERIES REMOTE CONTROL CONNECTOR PIN SCHEDULE.

Figure 5.8.10 PC Assembly, I/O Board 3A2A3, page 4 of 4.

PC ASSY, FSK MODEM 3A2A3A1

C1	PC ASSY, FSK MODEM 3A2A3A1	8076115094
C2	CAP. 10μF, 20V	1007290005
C3	CAP. 0.001μF, 100V, X7R, 20%	0281630003
C4	CAPACITOR 0.1μF, 50V, X7R	1011180014
C5	CAPACITOR 0.1μF, 50V, X7R	1011180014
C6	CAPACITOR 0.1μF, 50V, X7R	1011180014
P1	CAPACITOR 0.1μF, 50V, X7R	1011180014
R1	CONNECTOR, RIBBON, 14 PIN FEM	1008350001
R2	RESISTOR 604, 1%, 1/8W	0193980002
R3	RESISTOR 5.6K, 5%, 1/8W	1010805622
R4	RESISTOR 10K, 5%, 1/8W	1010801031
R5	RESISTOR 10K, 5%, 1/8W	1010801031
T1	RESISTOR 10K, 5%, 1/8W	1010801031
U1	TRANSFORMER, MODEM	1011340011
X1	IC. DIGITAL MC145443	1011330016
XP1	CRYSTAL, 3.579545 MHZ	1006270001
ZS1	CONNECTOR,PCB,TRANSITION,14PIN	1011090147
	VARISTOR, MOV V230LA20A	1010720023
	CABLE, FLAT, 14 COND. 28AWG	1011170001
	SCREW, PH4-40 X 5/16 LG.	0500850054
	WASHER, SPLIT #4	0500020001
	WASHER, FLAT #4 .219 OD	0502560002

1159CP

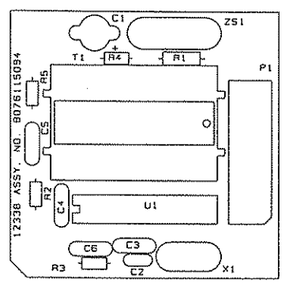

Figure 5.8.11 PC Assembly, FSK Modem 3A2A3A1, page 1 of 2.

A1159C

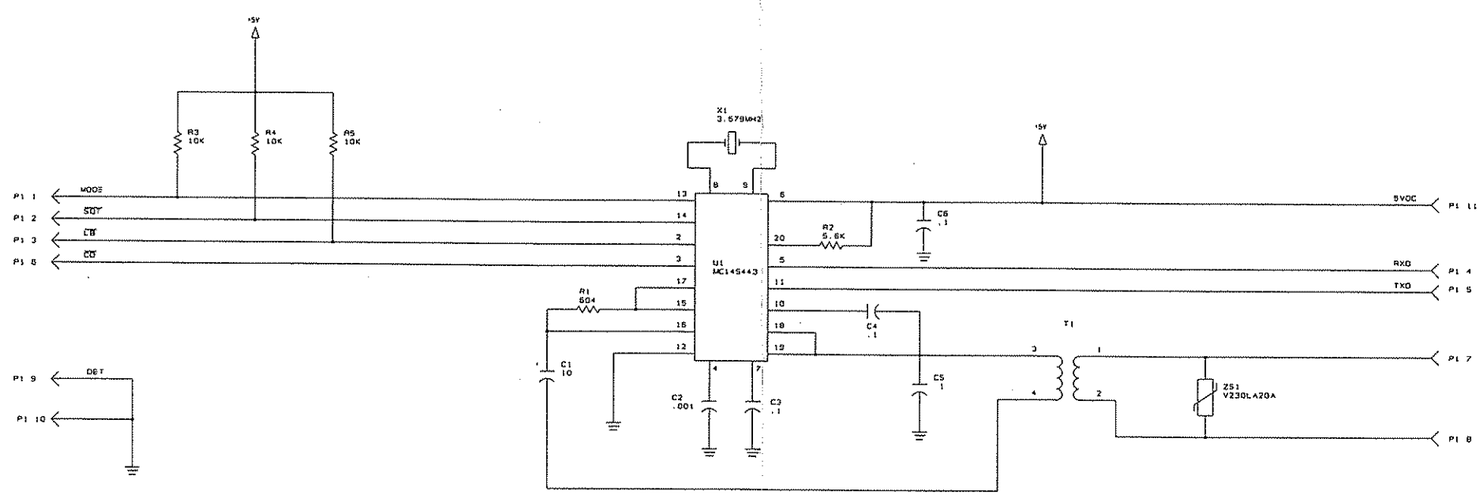

Figure 5.8.11 PC Assembly, FSK Modem 3A2A3A1, page 2 of 2.

A2105A

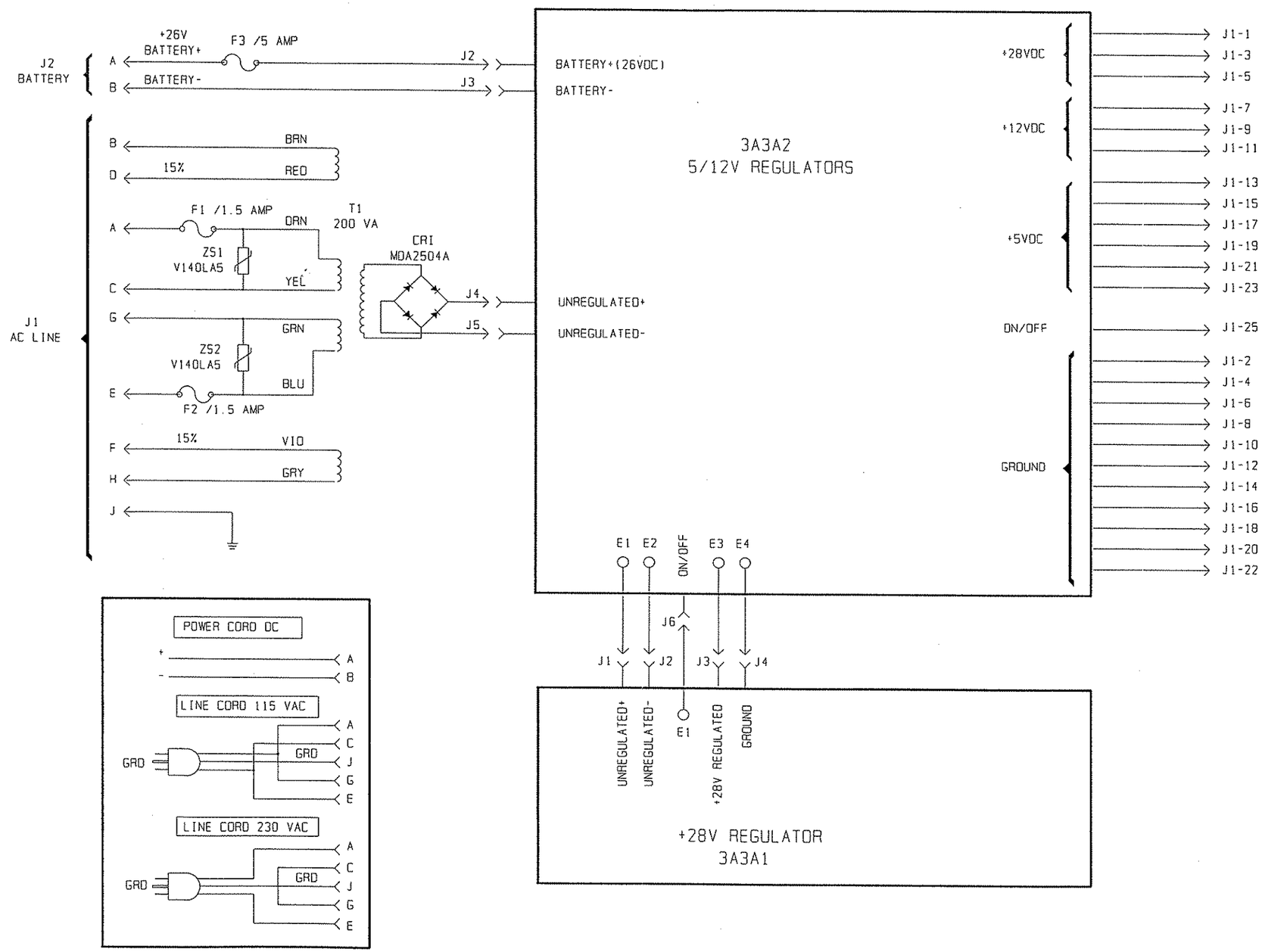

Figure 5.8.12 AC/DC Power Supply Chassis and Interconnect Diagram, page 1 of 1.

PC ASSY, 28V REGULATOR, 5 AMP 3A3A1

	PC ASSY, 28V REG, 5 AMP 3A3A1	8078021496
C1	CAP. .47µF, 50V, X7R 20%	0283377771
C2	CAPACITOR 0.1µF, 50V, X7R	1011180014
C3	CAP. 0.047 µF, 50V, X7R, 10%	1010740008
C4	CAP. 2.2µF, 35V, T368	0273950002
C5	CAP. .01µF, 50V, X7R 20%	0281730008
C6	CAP. 1µF, 35V, 196D	0281660000
C7	CAPACITOR 0.1µF, 50V, X7R	1011180014
C8	CAP. 2.2µF, 35V, T368	0273950002
C9	CAP. .01µF, 50V, X7R 20%	0281730008
C10	CAP. .01µF, 50V, X7R 20%	0281730008
C11	CAP. 1µF, 35V, 196D	0281660000
C12	CAPACITOR 0.1µF, 50V, X7R	1011180014
C13	CAP. .47µF, 50V, X7R 20%	0283377771
C15	CAP. 1000µF, 63V, 20%, 105C	1011350009
C16	CAP. 22µF, 15V, T368	0296660001
CR1	DIODE, SIGNAL, SIL. 1N4454	0405270003
CR2	DIODE, ZENER 1N5358B	0404900003
CR3	DIODE, LED, RED, PC MOUNT	1008480029
CR4	DIODE, ZENER 1N5364B	0405230001
CR5	DIODE, RECTIFIER 1N4004	0405180004
CR6	DIODE, LED, RED, PC MOUNT	1008480029
CR7	DIODE, LED, RED, PC MOUNT	1008480029
CR8	DIODE, LED, GREEN PC MOUNT	1011030012
CR9	DIODE, SIGNAL, SIL. 1N4454	0405270003
CR10	DIODE, SIGNAL, SIL. 1N4454	0405270003
CR11	DIODE, RECTIFIER 1N4004	0405180004
J1	TERMINAL, PC MOUNT, 3/16" MALE	1008550027
J2	TERMINAL, PC MOUNT, 1/4" MALE	1008330035
J3	TERMINAL, PC MOUNT, 3/16" MALE	1008550027
J4	TERMINAL, PC MOUNT, 1/4" MALE	1008330035
K1	RELAY, SPST, 24V	1008590029
*Q1	TRANSISTOR, PNP, MJ11031	1010990012
Q2	DIODE, SCR 2N5062	1011010011
Q3	TRANSISTOR, NPN, SI. 2N2222A	0448580004
R1	RESISTOR 470, 10%, 1W	0165280000
R2	RESISTOR 560, 5%, 1/4W	0183200004
R3	RESISTOR 3.9K, 5%, 1/8W	1010803921
R4	RESISTOR 4.7K, 5%, 1/8W	1010804723
R5	RESISTOR 6.8K, 5%, 1/8W	1010806823
R6	RESISTOR 2.2K, 5%, 1/8W	1010802224
R7	POT. 500, 10% 3/4W, 15 TURNS	0338490078
R8	RESISTOR 2.7K, 10%, 1/4W	0186670001
R9	RESISTOR 1K, 10%, 1/4W	0171560001
R10	RESISTOR 4.7K, 5%, 1/4W	0170770001
R11	RESISTOR 2.7K, 10%, 1/2W	0165780002
R12	RESISTOR 10K, 5%, 1/8W	1010801031
R13	RESISTOR 10K, 5%, 1/8W	1010801031
R14	RESISTOR 1.8K, 5%, 1/8W	1010801821
R15	POT. 500, 10% 3/4W, 15 TURNS	0338490078
R16	RESISTOR 680, 5%, 1/8W	1010806815
R17	RESISTOR 220, 10%, 1/4W	0171320000
R18	RESISTOR 180K, 5%, 1/8W	1010801848

*Installed on rear panel heat sink.

R19	RESISTOR 237K, 1%, 1/8W	1011310007
R20	RESISTOR 4.7M, 10 %, 1/4W	1011330008
R21	RESISTOR 10K, 5%, 1/8W	1010801031
R22	RESISTOR 2.7M, 5%, 1/4W	1004900007
R23	RESISTOR 10K, 5%, 1/8W	1010801031
R24	RESISTOR 680, 10%, 1/4W	0176630007
R25	RESISTOR 3.9K, 5%, 1/8W	1010803921
R19	RESISTOR 237K, 1%, 1/8W	1011310007
R20	RESISTOR 4.7M, 10 %, 1/4W	1011330008
R21	RESISTOR 10K, 5%, 1/8W	1010801031
R22	RESISTOR 2.7M, 5%, 1/4W	1004900007
R23	RESISTOR 10K, 5%, 1/8W	1010801031
R24	RESISTOR 680, 10%, 1/4W	0176630007
R25	RESISTOR 3.9K, 5%, 1/8W	1010803921
R27	RESISTOR 390, 10%, 1/2W	0173260004
R28	RESISTOR 680, 10%, 1/4W	0176630007
R29	RESISTOR 2.2K,10%, 1W	0164510001
R30	RESISTOR 5.6K, 5%, 1/8W	1010805622
R31	RESISTOR 4.7K, 5%, 1/8W	1010804723
R32	RESISTOR 2.2K, 5%, 1/4W	0178070009
T1	TOROID, SLOTTED, HALL EFFECT	1011040018
U1	IC. LINEAR LM340/7812	1003410022
U2	IC. LINEAR MC1723L	1010270036
U3	IC. DIGITAL 2501-1	1011000016
U4	IC. LINEAR LM311N	1005760021
U5	IC. LINEAR UGS3503	1011020017
U6	IC. DIGITAL ICL7665S	1010940007
U7	IC. LINEAR UA78L05 AWC	1010150014
XQ1	SOCKET, XSISTOR, TO-3, HI-PWR	1011220016

1153CP

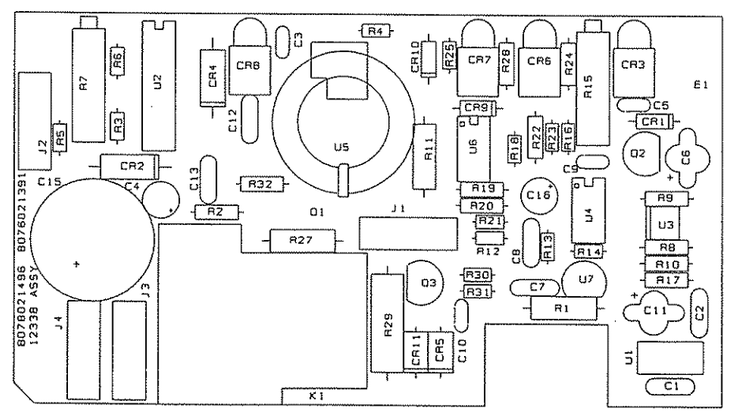

Figure 5.8.13 PC Assembly, 28V Regulator, 5 Amp 3A3A1, page 1 of 2.

A2016B

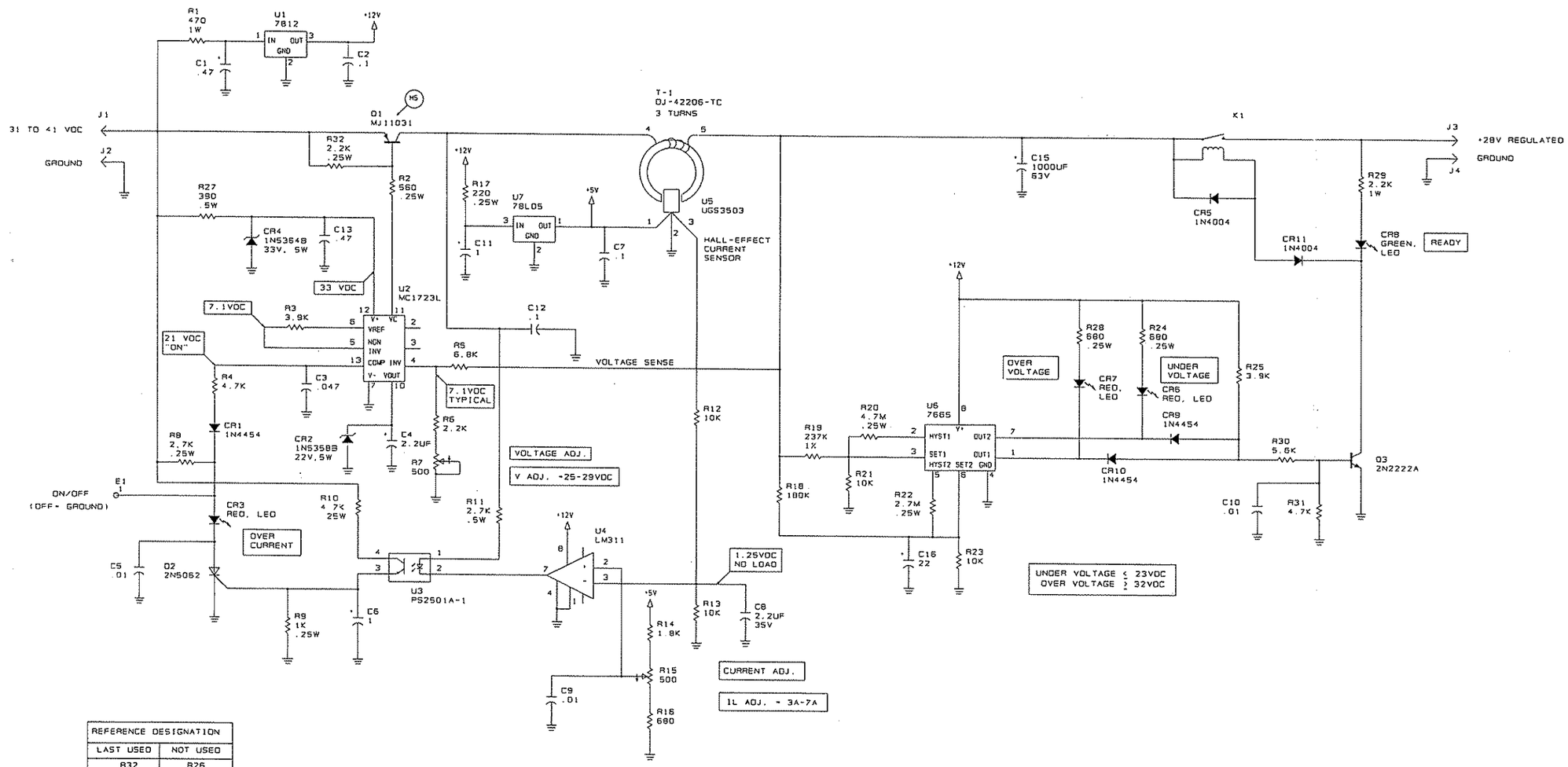

REFERENCE DESIGNATION	
LAST USED	NOT USED
R32	R26
CR11	
U7	
Q3	
C15	

Figure 5.8.13 PC Assembly, 28V Regulator, 5 Amp 3A3A1, page 2 of 2.

PC ASSY, 5/12 V REGULATORS 3A3A2

	PC ASSY, 5/12 V REGULATORS 3A3A2	8078025092
C1	CAP. 6800 μF, 63V, 20%, 105C	1010800019
C2	CAP. 6800 μF, 63V, 20%, 105C	1010800019
C3	CAPACITOR 0.1μF, 50V, X7R	1011180014
C4	CAP. 6.8μF, 50V, T350	1008980013
C5	CAP. 6.8μF, 50V, T350	1008980013
C6	CAPACITOR 0.1μF, 50V, X7R	1011180014
C7	CAP. 1μF, 35V, 196D	0281660000
C8	CAPACITOR 0.1μF, 50V, X7R	1011180014
C9	CAP. 6.8μF, 50V, T350	1008980013
C10	CAPACITOR 0.1μF, 50V, X7R	1011180014
C11	CAP. 10μF, 20V	1007290005
C12	CAP. 1μF, 35V, 196D	0281660000
C13	CAP. 10μF, 20V	1007290005
C14	CAP. 1μF, 35V, 196D	0281660000
C15	CAP. 1000μF, 63V, 20%, 105C	1011350009
C16	CAP. 1000μF, 63V, 20%, 105C	1011350009
CR1	DIODE, RECTIFIER 1N4004	0405180004
CR2	DIODE, ZENER 1N5245B	0405210001
CR3	DIODE, RECTIFIER 1N4004	0405180004
CR4	DIODE, ZENER 1N5353B	0405140002
CR5	DIODE, RECTIFIER 1N4004	0405180004
CR6	DIODE, RECTIFIER 1N4004	0405180004
CR7	DIODE, RECTIFIER 1N4004	0405180004
CR8	DIODE, RECTIFIER 1N4004	0405180004
CR9	DIODE, RECTIFIER 1N4004	0405180004
F1	FUSE, MDL, 1.5 AMP, 125V	0896540006
J1	CONNECTOR, HEADER, 26 PIN MALE	1010810022
J2	TERMINAL, PC MOUNT, 3/16" MALE	1008550027
J3	TERMINAL, PC MOUNT, 1/4" MALE	1008330035
J4	TERMINAL, PC MOUNT, 3/16" MALE	1008550027
J5	TERMINAL, PC MOUNT, 1/4" MALE	1008330035
J6	TERMINAL, PC MOUNT, 3/16" MALE	1008550027
J7	TERMINAL, PC MOUNT, 3/16" MALE	1008550027
J8	TERMINAL, PC MOUNT, 3/16" MALE	1008550027
K1	RELAY, SPST, 24VDC, PC MOUNT	1010310038
K2	RELAY, SPDT, 24V, REED	1003400001
L1	INDUCTOR, POWER, 180μH	1008690015
Q1	DIODE, TRANSZORB 1N5646A	1006680021
Q2	TRANSISTOR, NPN, SI. 2N2222A	0448580004
Q3	TRANSISTOR, NPN, SI. 2N2222A	0448580004
R1	RESISTOR 100, 10%, 1/2W	0174790007
R2	RESISTOR 10K, 10%, 1/4W	0170410005
R3	RESISTOR 5.6K, 10%, 1/4W	0183060008
R4	RESISTOR 100, 10%, 1/2W	0174790007
R5	RESISTOR 1K, 10%, 1/4W	0171560001
R6	RESISTOR 10K, 10%, 1/4W	0170410005
R7	RESISTOR 1050, 1%, 1/8W	1010620029
R8	RESISTOR 121, 1%, 1/8W	0195320000
R9	RESISTOR 374, 1%, 1/8W	1011030039
R10	RESISTOR 121, 1%, 1/8W	0195320000
XU1	SOCKET, TRANSISTOR TO-3	0841550000
XU2	SOCKET, TRANSISTOR TO-3	0841550000
	FUSECLIP, PC MOUNT	0534610005
	KEY, POLARIZING	1008070033

Figure 5.8.14 PC Assembly, 5/12V Regulators 3A3A2, page 1 of 2.

1169CP

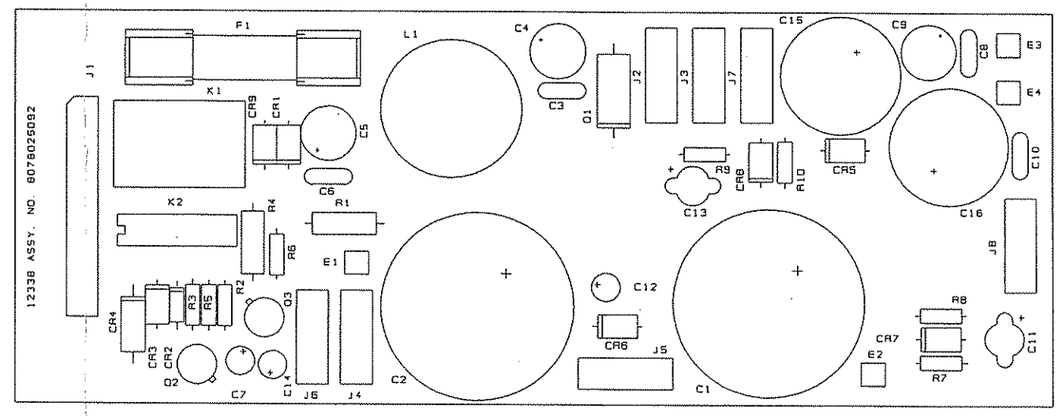

C1169A

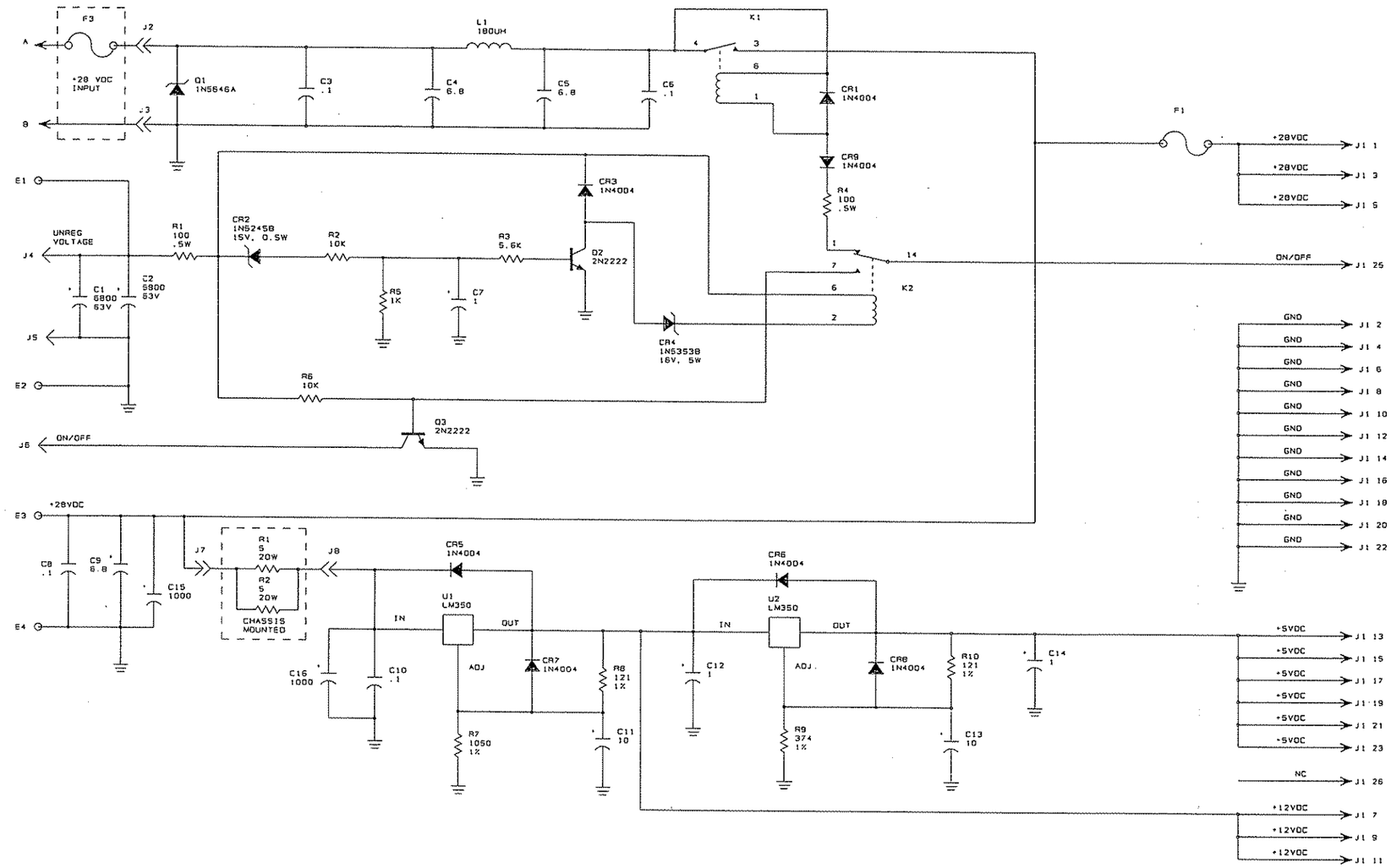

Figure 5.8.14 PC Assembly, 5/12V Regulators 3A3A2, page 2 of 2.

PC ASSY, AUDIO CONNECTORS 3A3A3

	PC ASSY, AUDIO CONNECTORS 3A3A3	8078018096
C1	CAP. .01µF, 50V, X7R 20%	0281730008
C2	CAP. .01µF, 50V, X7R 20%	0281730008
C3	CAP. .01µF, 50V, X7R 20%	0281730008
C4	CAP. .01µF, 50V, X7R 20%	0281730008
C5	CAP. .01µF, 50V, X7R 20%	0281730008
C6	CAP. .01µF, 50V, X7R 20%	0281730008
C7	CAP. .01µF, 50V, X7R 20%	0281730008
C8	CAP. .01µF, 50V, X7R 20%	0281730008
C9	CAP. .01µF, 50V, X7R 20%	0281730008
C10	CAP. .01µF, 50V, X7R 20%	0281730008
C11	CAP. .01µF, 50V, X7R 20%	0281730008
C12	CAP. .01µF, 50V, X7R 20%	0281730008
C13	CAP. .01µF, 50V, X7R 20%	0281730008
C14	CAP. .01µF, 50V, X7R 20%	0281730008
C15	CAP. .01µF, 50V, X7R 20%	0281730008
C16	CAP. .01µF, 50V, X7R 20%	0281730008
C17	CAP. .01µF, 50V, X7R 20%	0281730008
C18	CAP. .01µF, 50V, X7R 20%	0281730008
C19	CAP. .01µF, 50V, X7R 20%	0281730008
C20	CAP. .01µF, 50V, X7R 20%	0281730008
C21	CAP. .01µF, 50V, X7R 20%	0281730008
C22	CAP. .01µF, 50V, X7R 20%	0281730008
C23	CAP. .01µF, 50V, X7R 20%	0281730008
C24	CAP. .01µF, 50V, X7R 20%	0281730008
C25	CAP. .01µF, 50V, X7R 20%	0281730008
C26	CAP. .01µF, 50V, X7R 20%	0281730008
J1	CONNECTOR, HEADER, 20 PIN MALE	1011210207
J2	CONNECTOR, HEADER, 10 PIN MALE	1010800027
J3	CONNECTOR, POWER, 19 PIN, FEM	1011110008
J4	CONNECTOR, POWER, 10 PIN FEM	1010640020
ZS1	VARISTOR, MOV V230LA20A	1010720023
ZS2	VARISTOR, MOV V230LA20A	1010720023

1165AP

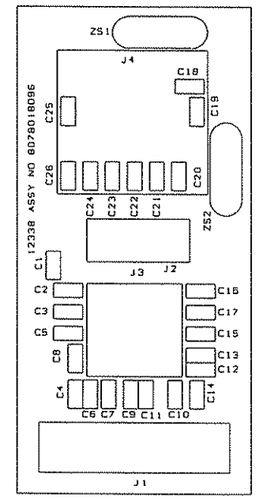

Figure 5.8.15 PC Assembly, Audio Connectors 3A3A3, page 1 of 2.

2019BA

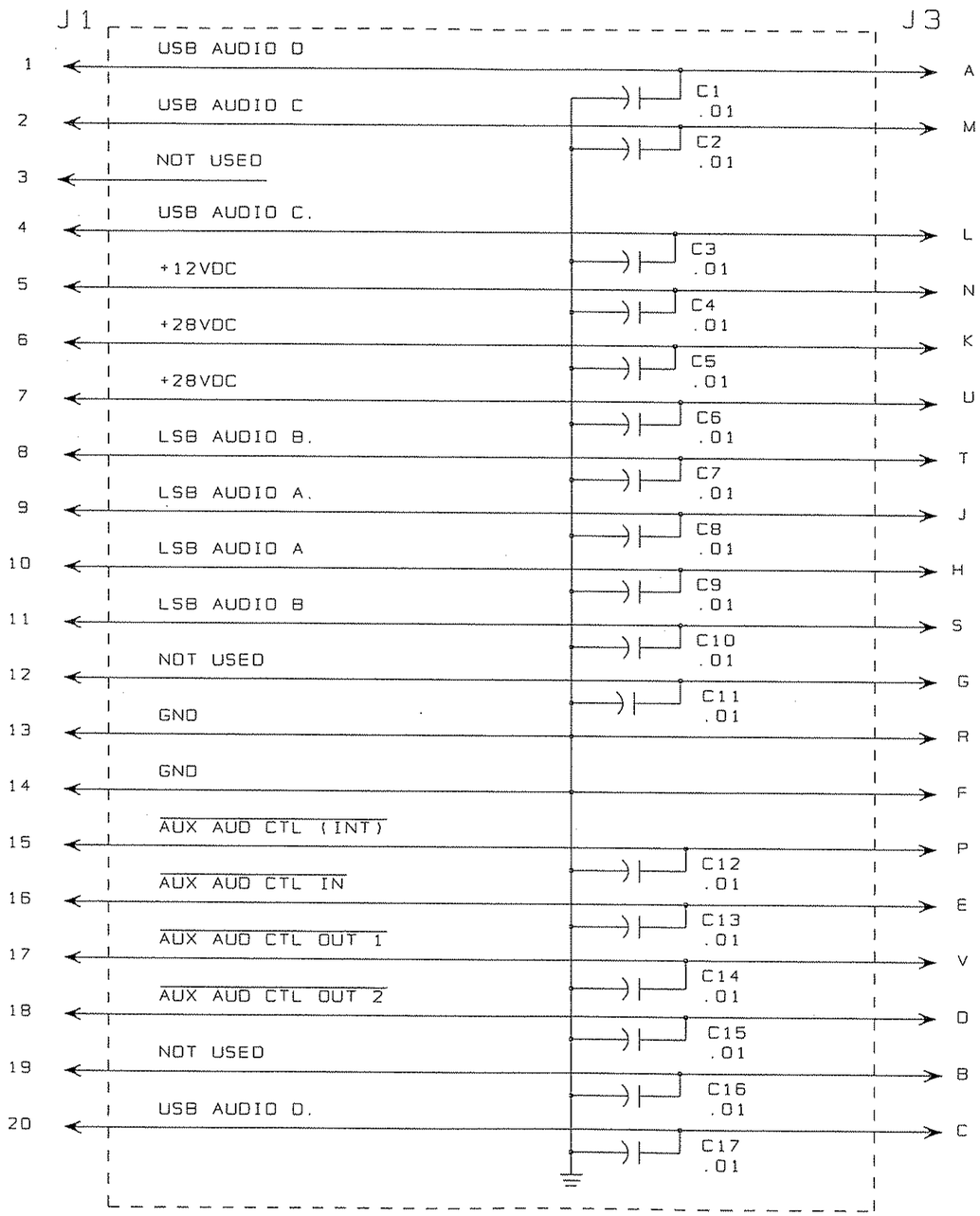

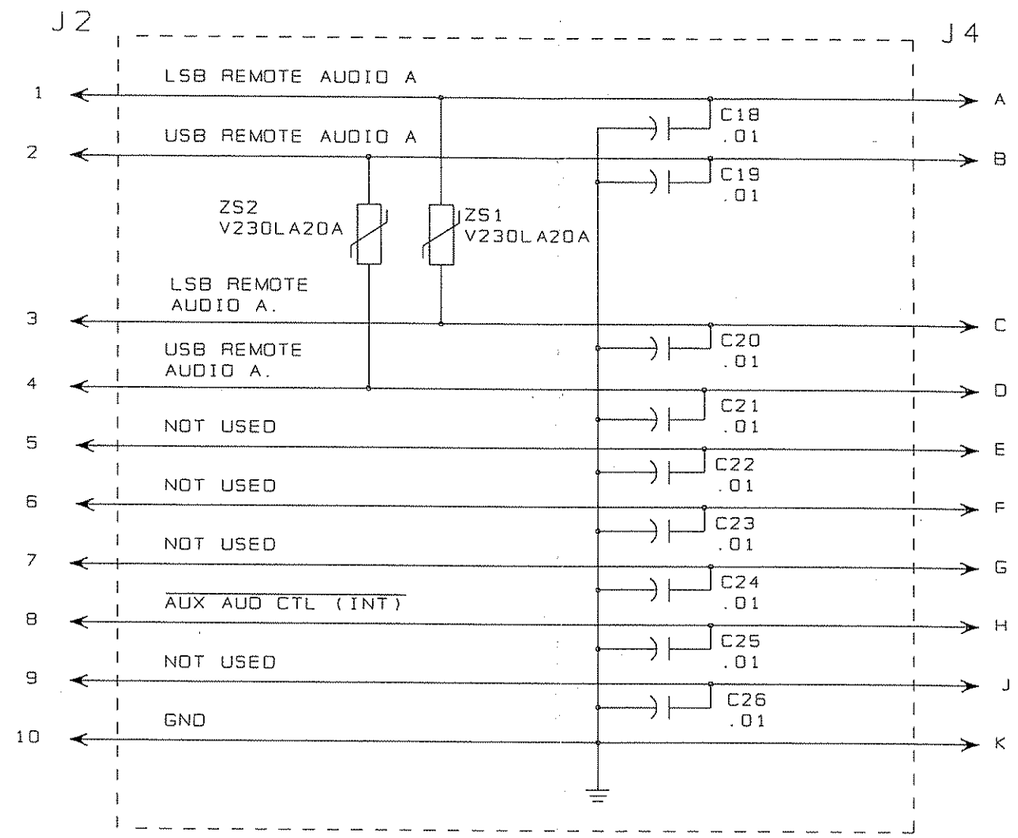

Figure 5.8.15 PC Assembly, Audio Connectors 3A3A3, page 2 of 2.

THIS PAGE INTENTIONALLY LEFT BLANK.

SECTION VI

RCU-9310R SPECIAL FEATURES AND FUNCTIONS

The RCU-9310R is equipped with the following special features and functions for controlling the TADIL A HF system. A full description and illustrations of these features and functions will appear in the revised RCU-9310R Operation and Maintenance Manual.

The following features appear in the "Feature Menu Display" and are operated from the "Feature Keys".

TGC, TRANSMIT GAIN CONTROL: The TADIL A transmitter system is equipped with Transmit Gain Control (TGC) to insure optimum power output for each of the ISB sideband channels. Periodically, as the system is re-configured or at the time of initial start-up, such setup may be effected as follows.

Depress the "MODE" key successively until "ISB" appears in the display screen. "TGC" will automatically appear in the Feature menu. Depressing the "TGC" key will cause the exciter to automatically key and adjust the Transmitter Gain. While this process is occurring the message:

TGC SETUP

will appear on the function display screen. When successfully adjusted, the message will disappear. The feature menu may be exited by depression of the "END" key.

POWER LEVEL: RF power level may be selected by pressing the power level key. This key is identified by the current system power level displayed in watts. In single sideband operation power selection levels of 125, 500 and 1000 watts are available. In ISB 100, 500 and 1000 watts are available.

NOTE: See Section 3.4.2 OPTIONS for displays.

LSB DATA FILTER: Depress the "MORE", key until the feature display indicates "LSB-FILTER-USB".

Depress "LSB FILTER". The feature display will now display "NORMAL"and "DATA".
Depressing "DATA" will cause the asterisk(*) to move to the "DATA" position for TADIL A data transmission. Depressing "NORMAL" will cause the asterisk (*) to move to the "NORMAL" position for voice transmission. After making the desired selection press "END" to return to the next menu level.

USB DATA FILTER: Depress the "MORE", key until the feature display indicates "LSB-FILTER-USB".

Depress "USB FILTER". The feature display will now display "NORMAL"and "DATA".
Depressing "DATA" will cause the asterisk(*) to move to the "DATA" position for TADIL A data transmission. Depressing "NORMAL" will cause the asterisk (*) to move to the "NORMAL" position for voice transmission. After making the desired selection press "END" to return to the next menu level.

PRE/POSTSELECTOR OPERATION: The TADIL A receiver/transmitter system is equipped with a Pre/postselector.

Depress the "MORE" key until the feature display indicates "PRESEL IN" or PRESEL OUT" and "GAIN LOW" or "GAIN HIGH".

Depress the "PRESEL" key until the display indicates the desired function:
"PRESEL IN": Pre/postselector is on and is active in the receive and transmit path.
"PRESEL OUT": Pre/postselector is off and is bypassed in the receive and transmit path.

Depress the "GAIN" key until the display indicates the desired function:
"GAIN LOW": Pre/postselector receive preamplifier is disabled.
"GAIN HIGH": Pre/postselector receive preamplifier is enabled.