TM-8078000502

REMOTE CONTROL UNIT

RCU-9310

OPERATION and MAINTENANCE MANUAL

SUNAIR® 3101 SW Third Avenue, Ft. Lauderdale, FL 33315-3389

WARRANTY POLICY

GROUND AND MARINE PRODUCTS

Sunair Electronics warrants equipment manufactured by it to be free from defects in material or workmanship, under normal use for the lesser of one (1) year from the date of installation or 15 months from date of shipment by Sunair.

Sunair will repair or replace, at its option, any defective equipment or component of the equipment returned to it at its factory, transportation prepaid, within such warranty period. No reimbursement will be made for non-factory repair charges.

This warranty is void if equipment is modified or repaired without authorization, subject to misuse, abuse, accident, water damage or other neglect, or has its serial number defaced or removed.

THIS WARRANTY IS ESPECIALLY IN LIEU OF ANY AND ALL OTHER WARRANTIES EXPRESSED OR IMPLIED, INCLUDING ANY IMPLIED WARRANTY OF MERCHANTABILITY OR FITNESS FOR A PARTICULAR PURPOSE. The obligation and responsibility of Sunair shall be limited to that expressly provided herein and Sunair shall not be liable for consequential or other damage or expense whatsoever therefore or by any reason thereof.

Sunair reserves the right to make changes in design or additions to or improvements in its equipment without obligation to install such additions or improvements in equipment theretofore manufactured.

SUNAIR ELECTRONICS, INC.

SUNAIR

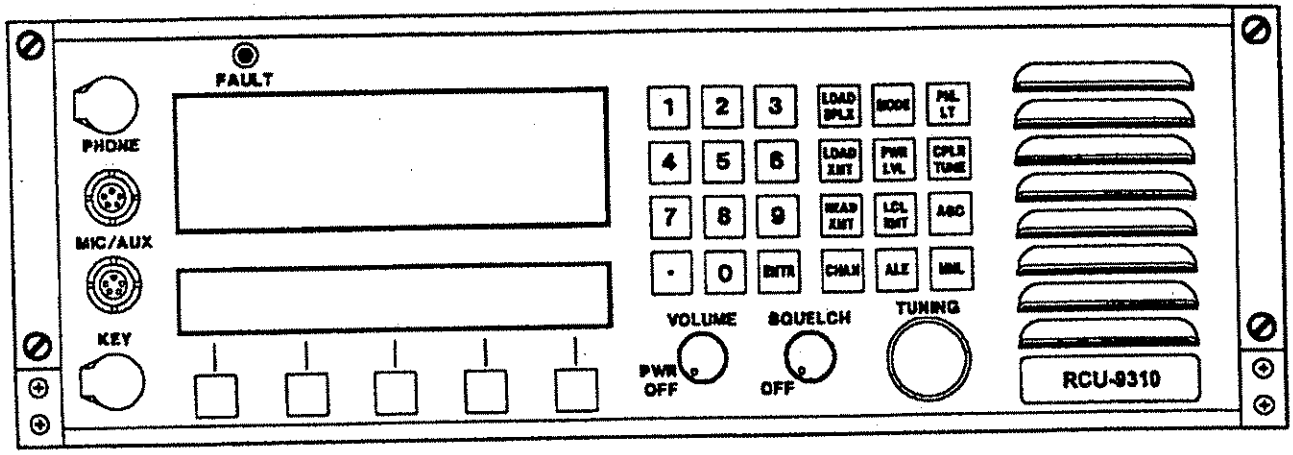

RCU-9310 REMOTE CONTROL UNIT

OPERATION AND MAINTENANCE MANUAL

FOURTH EDITION FEBRUARY 28, 1997
Page change 1: 03/24/99
Page change 2: 08/26/99

PRODUCT SERVICE:

In case of difficulty please contact the Sunair Product Service Department, between the hours of 8:00 AM and 5:00 PM or write to:

Product Service Dept.
Sunair Electronics, Inc.
3101 SW Third Avenue
Ft. Lauderdale, FL 33315-3389
U.S.A.

Telephone: (954) 525-1505
Fax: (954) 765-1322
E-Mail: techsupport@sunairhf.com

TRAINING:

Sunair offers training programs of varying lengths covering operation, service, and maintenance of all Sunair manufactured equipment. For details please contact the Product Support Department.

TABLE of CONTENTS

Section	Description	Page
I	**GENERAL INFORMATION**	
	1.1 SCOPE OF MANUAL	1-1
	1.2 PURPOSE OF EQUIPMENT	1-1
	1.3 GENERAL DESCRIPTION	1-1
	1.4 TECHNICAL SPECIFICATIONS	1-2
	1.5 ENVIRONMENTAL SPECIFICATIONS	1-2
	1.6 EQUIPMENT SUPPLIED	1-3
	1.7 OPTIONS AVAILABLE	1-3
II	**INSTALLATION**	
	2.1 GENERAL	2-1
	2.2 UNPACKING AND INSPECTION	2-1
	2.3 RETURN OF EQUIPMENT TO FACTORY	2-1
	2.4 GENERAL INSTALLATION AND MOUNTING INFORMATION	2-2
	2.4.1 GENERAL INSTALLATION	2-2
	2.4.2 BASE STATION INSTALLATION	2-9
	2.4.3 RACK INSTALLATIONS	2-9
III	**OPERATION**	
	3.1 GENERAL	3-1
	3.2 PRIMARY OPERATIONS	3-3
	3.2.1 REMOTE TRANSCEIVER SET UP FOR MODE, AGC AND TRANSMIT POWER	3-3
	3.2.2 ESTABLISHING AN OPERATING FREQUENCY	3-5
	3.2.3 TRANSMIT TUNING	3-6
	3.2.4 ANTENNA COUPLER TUNING	3-6
	3.2.5 MANUAL TUNING	3-6
	3.2.6 PANEL LIGHTING	3-7
	3.2.7 OPERATING WITH PRESET CHANNELS	3-7
	3.2.8 MANUAL CHANNEL SCANNING	3-8

TABLE of CONTENTS (Cont...)

Section	Description	Page
	3.2.9 LOADING PRESET CHANNEL FREQUENCIES	3-10
	3.2.10 BFO OPERATION	3-12
3.3	EQUIPMENT SET UP	3-13
	3.3.1 BITE (Built in Test Equipment)	3-13
	3.3.1.1 REMOTE CONTROL UNIT SELF-TEST (LOCAL BITE)	3-14
	3.3.1.2 TRANSCEIVER TEST (REMOTE BITE)	3-15
	3.3.2 METER FUNCTIONS	3-17
	3.3.3 SPEAKER ON/OFF FUNCTION	3-19
	3.3.4 'MHz' or 'kHz' FREQUENCY DISPLAY	3-20
	3.3.5 TIME DISPLAY	3-20
	3.3.6 'I/O' PORT SET UP	3-22
	3.3.7 ADDRESS AND SOFTWARE REVISION LEVEL	3-25
	3.3.8 'CW' KEY AND FILTER OPTIONS	3-26
	3.3.9 LINE AUDIO SELECTION	3-27
3.4	ADVANCED OPERATIONS	3-28
	3.4.1 RECEIVER SCANNING	3-28
	3.4.2 AUTOMATIC LINK ESTABLISHMENT (ALE) PROGRAMMING	3-31
	3.4.2.1 GENERAL	3-31
	3.4.2.2 ESTABLISHING ALE-ID's	3-32
	3.4.3 AUTOMATIC LINK ESTABLISHMENT (ALE) OPERATION	3-36
	3.4.4 SOUNDING	3-41
	3.4.5 NET CALL	3-44
	3.4.5.1 PLACING A NET-CALL	3-44
	3.4.6 ALL CALL	3-46
	3.4.7 BREAK LINK COMMAND	3-47
	3.4.8 OPTIONS	3-48
	3.4.8.1 LYNCOMPEX	3-48
	3.4.8.2 DATA FILTER	3-49

TABLE of CONTENTS (Cont...)

Section	Description	Page
	3.4.8.3 RADIO SECURITY	3-49
	3.4.8.4 PRE-SELECTOR	3-50
IV	**THEORY OF OPERATION**	
4.1	REMOTE CONTROL UNIT-TRANSCEIVER INTERFACE AND INTERACTION	4-1
4.2	REMOTE CONTROL UNIT	4-1
4.2.1	FRONT PANEL ASSEMBLY 3A1	4-3
4.2.2	CPU ASSEMBLY 3A2A1	4-3
4.2.2.1	GENERAL	4-3
4.2.2.2	MICROPROCESSOR U2	4-3
4.2.2.3	ERASABLE PROGRAMMABLE READ-ONLY MEMORY (EPROM) U13 and U14	4-3
4.2.2.4	ELECTRICALLY ERASABLE PROGRAMMABLE READ ONLY MEMORY (EEPROM) U8	4-4
4.2.2.5	STATIC RANDOM ACCESS MEMORY (SRAM) U3	4-4
4.2.2.6	OPTIONAL SMART WATCH U14(A)	4-4
4.2.3	OPTOCOUPLER ASSEMBLY 3A2A1A1	4-4
4.2.4	AUDIO/REMOTE AUDIO ASSEMBLIES 3A2A2/3A2A4	4-4
4.2.5	I/O ASSEMBLY 3A2A3	4-5
4.2.6	POWER SUPPLY ASSEMBLIES 3A3, 3A3A1, and 3A3A2	4-6
V	**FAULT ISOLATION/MAINTENANCE AND REPAIR**	
5.1	GENERAL	5-1
5.2	DISASSEMBLY	5-1
5.2.1	TOP OR BOTTOM COVER REMOVAL	5-1
5.3	TEST SET UP	5-1
5.3.1	PRELIMINARY	5-1
5.4	BITE	5-1
5.4.1	PRELIMINARY	5-1
5.4.2	COMMON MODULES	5-4

TABLE of CONTENTS (Cont...)

Section	Description	Page
	5.4.2.1 FRONT PANEL FAULT	5-4
	5.4.2.2 CPU FAULT	5-4
	5.4.2.3 I/O FAULT	5-5
	5.4.2.4 AUDIO FAULT	5-5
	5.4.2.5 POWER SUPPLY FAULT	5-6
5.5	TROUBLESHOOTING WITH SELF-SURVEILLANCE BITE	5-6
	5.5.1 AC POWER SUPPLY	5-6
	5.5.2 INSTALLATION OF NEW BACKLIGHTING DEVICES FOR FRONT PANEL LCD'S	5-12
5.6	TEST EQUIPMENT REQUIRED OR EQUIVALENT	5-16
5.7	TEST AND ALIGNMENT	5-16
	5.7.1 TRANSMIT REMOTE AUDIO	5-16
	5.7.2 RECEIVE REMOTE AUDIO	5-20
	5.7.3 SOFTWARE SWITCH SETTING CHECKS	5-23
5.8	SCHEMATICS AND PARTS LISTS	5-25

TABLE of ABBREVIATIONS

ADDR Address
AGC Automatic Gain Control
ALC Automatic Level Control
AM Amplitude Modulation
AME Amplitude Modulation Equivalent
AMP/AMPL Amplifier
ARQ Automatic Request
AUD Audio
AUTO Automatic
AUX Auxiliary
BAUD A variable unit of data transmission speed (bits per second)
BELL U.S. Telephone standards
BFO Beat Frequency Oscillator
BITE Built In Test Equipment
BRD Board
CH /CHAN /CHL/CHN Channel
CLR Clear
CMOS Complementary Metal Oxide Semiconductor
CPLR Coupler
CPU Computer
CW Carrier Wave
dB Decibel
dBm Decibels referred to 1 milliwatt across 600 ohms
DSBSC Double Sideband Suppressed Carrier
DSP Display
DUART Dual Asynchronous Receive/Transmit
EEPROM Electrically Erasable and Programmable Read Only Memory
EPROM Electrically Programmable Read Only Memory
EMI Electromagnetic Radiation Interference
ENTR Enter
FAX Facsimile
FEC Forward Error Correction
FREQ Frequency
FSK Frequency Shift Keying
FWD Forward
GRP Group
HF High Frequency
Hz Hertz
IC Integrated Circuit
IF Intermediate Frequency
I/O Input/Output
IONCAP Ionospheric Communications Analysis and Prediction
kHz Kilohertz
kW Kilowatt
ISB Independent Sideband
LCD Liquid Crystal Display
LCL Local
LED Light Emitting Diode
LK Link
LO Local Oscillator
LP/LPX Lincompex
LRU Lowest Repairable Unit
LSB Lower Sideband
LT Light
LVL Level
MAN Manual
M CH Manual Channel
MED Medium
MHz Megahertz
MIC Microphone
MIL-STD Military Standard
MNL Manual
ms Millisecond
MTTR Mean Time To Repair
MTR Meter
NAR Narrow
O.D. Olive Drab
PA Power Amplifier
PC Printed Circuit
PEP Peak Envelope Power
PLL Phase-Locked Loop
P/N Part Number
PNL Panel
POSTSL Post-Selector
PRESEL Pre-Selector
PTT Push-To-Talk
PWR Power
RCV/RX Receive
REFL Reflected
REV Revision
RF Radio Frequency
RFI Radio Frequency Interference
RFL Reflected
RMT Remote
RS232 Computer control, hardwired up to 50 feet maximum
RS422 Computer control, hardwired up to 4000 feet maximum
RS485 Computer control, hardwired for multiple users
RTTY Radio Teletype
SEL Select
SLO Slow
S MTR Signal Strength Meter
SPKR Speaker
SPLX Simplex
SRAM Static Random Access Memory
SSB Single Sideband
TCXO Temperature Controlled Crystal Oscillator
TGC Transmit Gain Control
THD Total Harmonic Distortion
TTL Transistor Transistor Logic
TX/XMT Transmit
USB Upper Sideband
UTC Universal Time
VCO Voltage Controlled Oscillator
VHF Very High Frequency
VRMS Volts Root Mean Square
VSWR Voltage Standing Wave Ratio
W Watt
WPM Words Per Minute
* Asterisk indicates function selected

LISTING of FIGURES

Section	Description	Page
II	**INSTALLATION**	
	Figure 2.4.1.1 RCU-9310 Outline Dimensions and Connector Locations.	2-4
	Figure 2.4.1.2 Interconnection of RCU-9310 Remote Control Unit and RT-9000 Transceiver.	2-5
	Figure 2.4.1.3 FSK, RS-232, RS-422, or RS-485 Wiring Diagrams.	2-6
	Figure 2.4.1.4 RCU-9310 Remote Audio to RT-9000 Audio Wiring Diagram.	2-7
	Figure 2.4.1.5 RCU-9310 Audio to External Data Modems Wiring Diagram.	2-8
	Figure 2.4.3 Installation of RCU-9310 in Equipment Rack.	2-9
III	**OPERATION**	
	Figure 3.1.1 Front Panel Controls for the RCU-9310.	3-1
	Figure 3.1.2 Operational Display Information Location.	3-2
	Figure 3.2.1 RCU-9310 Remote Control Display Screens.	3-4
	Figure 3.2.2 RCU-9310 Operating Controls.	3-5
	Figure 3.2.5 RCU-9310 Operating Controls.	3-7
	Figure 3.2.7 RCU-9310 Operating Controls.	3-8
	Figure 3.2.8 RCU-9310 Operational Controls.	3-9
	Figure 3.2.9.1 RCU-9310 Channel Loading Controls.	3-10
	Figure 3.2.9.2 RCU-9310 'Feature Display'.	3-11
	Figure 3.2.10 RCU-9310 Displays, with BFO Enabled.	3-12
	Figure 3.3.1.1 RCU-9310 Feature Menu, BITE Selection.	3-13
	Figure 3.3.1.2 RCU-9310 BITE Submenu.	3-14
	Figure 3.3.2.1 RCU-9310 Operational Displays.	3-17
	Figure 3.3.2.2 RCU-9310 Feature Menu Select Display.	3-17
	Figure 3.3.2.3 RCU-9310 Feature Menu Select Display.	3-18
	Figure 3.3.2.4 RCU-9310 Feature Menu Select Display.	3-18
	Figure 3.3.3 RCU-9310 Feature Menu Select Display.	3-19

LISTING of FIGURES (Cont...)

Section	Description	Page
	Figure 3.3.4 RCU-9310 Operating Controls.	3-20
	Figure 3.3.5.1 Feature Menu Display.	3-20
	Figure 3.3.5.2 Time Display and Time Set Display.	3-21
	Figure 3.3.5.3 Time Display.	3-21
	Figure 3.3.5.4 'Set-Time' Display.	3-22
	Figure 3.3.6.1 RCU-9310 I/O Port Connector.	3-22
	Figure 3.3.6.2 Feature Menu Display of Port 'A' Selection Menu.	3-23
	Figure 3.3.6.4 Port 'A' Conditioning Menu.	3-24
	Figure 3.3.6.5 Baud Rate Display.	3-24
	Figure 3.3.6.6 Baud Rate Selection Menu 1.	3-24
	Figure 3.3.6.7 Baud Rate Selection Menu 2.	3-25
	Figure 3.3.7.1 Address and Revision Level Display.	3-25
	Figure 3.3.7.2 Feature Menu for Selection of Address.	3-26
	Figure 3.3.8 Feature Menu Display for Selection of 'CW' Options.	3-27
	Figure 3.3.9.1 RCU-9310 Feature Menu Select Display.	3-28
	Figure 3.3.9.2 Line Audio Selection Menu Display.	3-28
	Figure 3.4.1.1 Operational Display for Channelized Mode.	3-29
	Figure 3.4.1.2 Feature Menu Display for 'SCAN' Select Key.	3-29
	Figure 3.4.1.3 Feature Menu Display for 'SCAN' Function.	3-30
	Figure 3.4.1.4 Feature Menu Display for 'SCAN LOAD' Select Key.	3-30
	Figure 3.4.2.2.1 RCU-9310 Feature Menu Display.	3-32
	Figure 3.4.2.2.2 Feature Menu Display for 'ALE-ID' Select Key.	3-33
	Figure 3.4.2.2.3 RCU-9310 Display for 'SLOT PS' Programming.	3-33
	Figure 3.4.2.2.4 RCU-9310 Display for 'SELF ID' Programming.	3-34
	Figure 3.4.2.2.5 Feature Display for 'CALL ID' Select Key.	3-35
	Figure 3.4.3.1 Operational Display for 'ALE' Function.	3-37
	Figure 3.4.3.2 ALE Calling Menu.	3-37
	Figure 3.4.3.3 Feature Display for 'Select Group'.	3-38
	Figure 3.4.3.4 Operational Display for 'CALL ID' Selection.	3-39
	Figure 3.4.3.5 Operational Display of the Station Being Called.	3-39

LISTING of FIGURES (Cont...)

Section	Description	Page
	Figure 3.4.3.6 Operational Display of Link with Station Being Called.	3-40
	Figure 3.4.3.7 Operational Display on Called Station after a Link.	3-41
	Figure 3.4.4.1 ALE Calling Menu.	3-41
	Figure 3.4.4.2 Sounding Menu.	3-42
	Figure 3.4.4.3 Operational Display at Sounding Station.	3-42
	Figure 3.4.4.4 Operational Display on Network Stations Receiving Sound.	3-43
	Figure 3.4.4.5 Sounding Timer Menu.	3-43
	Figure 3.4.7.1 Break Link Keys.	3-48
	Figure 3.4.8.1 'SECURE' Feature Menu.	3-48
	Figure 3.4.8.1.1 Lycompex Feature Menu Display.	3-48
	Figure 3.4.8.1.2 Lycompex Control Feature Menu Display.	3-49
	Figure 3.4.8.5.1 Feature Menu Display for Pre-selector Selection.	3-50
IV	**THEORY OF OPERATION**	
	Figure 4.1 RCU-9310 Remote Control Unit Block Diagram.	4-2
V	**FAULT ISOLATION/MAINTENANCE AND REPAIR**	
	Figure 5.2.1.1 Top/Bottom and Card Cage Covers Removal.	5-2
	Figure 5.4.1.1 RCU-9310 Feature Menu, BITE Selection.	5-3
	Figure 5.4.1.2 RCU-9310 BITE Submenu.	5-3
	Figure 5.4.1.3 Top View RCU-9310 LRU 'Fault Indicators'.	5-5
	Figure 5.4.2.1 Major Assembly Locations.	5-8
	Figure 5.4.2.2 Removal of Front and Rear Panel and Major Assemblies Locations.	5-9
	Figure 5.4.2.3 Removal/Replacement of CPU 3A2A1 and I/O 3A2A3.	5-10
	Figure 5.4.2.4 Removal/Replacement of I/O 3A2A3 or FSK 3A2A3A1.	5-11
	Figure 5.5.2.1 Removal and Installation of Front Panel PC Assembly.	5-13
	Figure 5.5.2.2 Removal and Installation of LCD Assembly.	5-14

LISTING of FIGURES (Cont...)

Section	Description	Page
	Figure 5.5.2.3 Installation of Backlighting Devices.	5-15
	Figure 5.7.1.1 RCU-9310 Stand Alone Audio Test Set Up.	5-18
	Figure 5.7.1.2 Top View RCU-9310 Alignment Adjustment Locations.	5-18
	Figure 5.7.1.3 Transmit Path Audio A.	5-19
	Figure 5.7.2.1 RCU-9310 Stand Alone Audio Test Set Up.	5-21
	Figure 5.7.2.2 Receive Path Audio A.	5-22
	Figure 5.8 RCU-9310 Assemblies and Subassemblies.	5-25
	Figure 5.8.1 Final Tested RCU-9310, Chassis Assembly 3A3, and Connector Kit.	5-27
	Figure 5.8.2 PC Assembly, Front Panel 3A1A1, page 1 of 6.	5-28
	Figure 5.8.3 PC Assembly, Mother Board 3A2A5, page 1 of 4.	5-34
	Figure 5.8.4 PC Assembly, CPU 3A2A1, page 1 of 8.	5-38
	Figure 5.8.5 PC Assembly, OPTOCOUPLER 3A2A1A1, page 1 of 3.	5-46
	Figure 5.8.6 PC Assembly, Audio 3A2A2, page 1 of 9.	5-49
	Figure 5.8.7 PC Assembly, Audio Remote 3A2A4, page 1 of 2.	5-58
	Figure 5.8.8 PC Assembly, I/O Board 3A2A3, page 1 of 4.	5-60
	Figure 5.8.9 PC Assembly, FSK Modem 3A2A3A1, page 1 of 2.	5-64
	Figure 5.8.10 AC/DC Power Supply Chassis and Interconnect Diagram, page 1 of 1.	5-67
	Figure 5.8.11 PC Assembly, 28V Regulator, 5 Amp 3A3A1, page 1 of 2.	5-68
	Figure 5.8.12 PC Assembly, 5/12V Regulators 3A3A2, page 1 of 2.	5-70
	Figure 5.8.13 PC Assembly, Audio Connectors 3A3A3, page 1 of 2.	5-72

THIS PAGE INTENTIONALLY LEFT BLANK.

SECTION I

GENERAL INFORMATION

1.1 SCOPE OF MANUAL

This manual contains information necessary to install, operate, and maintain the RCU-9310 Remote Control Unit. Installation information is in Section II. Operating Instructions are in Section III. Theory of Operation is in Section IV. Maintenance and Repair Procedures are in Section V. Information in this manual applies to all equipment configurations, unless otherwise stated in the text or illustrations.

1.2 PURPOSE OF EQUIPMENT

The RCU-9310 Remote Control Unit is designed to provide complete operational control of a remotely-located RT-9000 Transceiver.

The RCU-9310 allows an operator at a remote site to access and perform all transceiver primary functions: selecting the transmission mode and power level; establishing operating frequencies; automatically tuning the transmitter and associated antenna coupler; manual tuning; and loading, scanning, and operating with preset frequency channels.

The RCU-9310 also enables the remote operator to perform several non-operational, periodic, functions related to equipment setup and maintenance. Diagnostic tests -- to the lowest repairable unit (LRU) -- can be selectively executed on both the transceiver and the remote control unit itself. Other functions include: selection of CW keying speed and filtering options; connection of external devices to the transceiver's audio input and output lines; local I/O port conditioning; transceiver memory dump (i.e., clearing all preprogrammed channels); and transceiver metering at the remote control panel.

In addition, the RCU-9310 allows the remote operator to access and use the transceiver's advanced automated functions: receiver scanning of preprogrammed channels; programming and execution of Automatic Link Establishment (ALE) operations; "sounding" (broadcasting to selected stations in a predefined network); and "network call" (broadcasting to all stations in a network).

1.3 GENERAL DESCRIPTION

The RCU-9310 is intended for use on table tops or in base station 19-inch rack installations. However, its rugged package makes the RCU-9310 adaptable to various environments. Internally, the RCU-9310 is designed with the service technician in mind. Built-in test equipment (BITE), with descriptive front-panel readouts, and modularized plug-in assemblies make the MTTR (Mean Time To Repair) less than fifteen (15) minutes. LEDs located on the assemblies allow the technician to pinpoint faulty modules immediately. The RCU-9310 is lightweight for its capability, weighing only 20 pounds. Available in Olive Drab (OD) or Grey, the RCU-9310 is compatible with most radio station color schemes. (If a particular color other than OD or Grey is required, contact the Sunair Marketing Department for information concerning changes to the standard colors.)

The RCU-9310 has a simple, easily understood, front panel that duplicates the functions of the RT-9000 Transceiver. First time users can operate the equipment without extensive training. The wide screen liquid crystal display (LCD) is continuously updated by the microprocessor with operational status such as Frequency, Channel, Mode, BFO, AGC, Power, Local or Remote Control. The LCD also contains a bar graph meter which selectively indicates signal strength, forward RF power, reverse RF power and Remote transmit and receive audio

The built-in-test routines include power amplifier and antenna coupler status in plain English messages which appear in the display. Softkeys and a softkey menu LCD display selected options such as Time, CW Filter, etc. The softkeys also provide access to remote control configuration, meter selection, speaker control and other operating features not found on the front panel keyboard.

1.4 TECHNICAL SPECIFICATIONS

REMOTE INTERFACE: RS232/422/485 FSK Tone.

NOTE: Must be hardwired between RCU-9310 and RT-9000(A) for mode selected.

TRANSCEIVER INTERFACE: Transmit and receive audio, 0 dBm adjustable into 600 ohms.

BITE: Fault isolated to module level (LRU), descriptive readout on front panel and individual module indication.

INPUT POWER: +26 VDC ±15%; 120/240 VAC ±15%; AC/DC Auto Changeover.

AUDIO OUTPUT: 5 Watts into internal speaker < 5% THD; Two selectable lines, at -20 dBm to +10 dBm into 600 ohms; Headset, low impedance.

SQUELCH: Syllabic.

AUDIO INPUT: Microphone, aux. connector, and two selectable 600 ohm lines at -20 dBm to +10 dBm.

SIZE: (CM): 15.2H X 45.3W X 26.04L.
(INCHES) 5.96H X 17.83W X 10.25L

WEIGHT: (KG): 9.1
(LBS): 20

CONSTRUCTION: Modular plug-in assemblies.

1.5 ENVIRONMENTAL SPECIFICATIONS

TEMPERATURE: -30°C to +50°C.

HUMIDITY: 100% at 50°C.

RAIN: MIL-STD-810D, Method 506.2.

SHOCK: MIL-STD-810D, Method 516.3.

VIBRATION: MIL-STD-810D, Method 514.3.

1.6 EQUIPMENT SUPPLIED

The following is a list of equipment, with appropriate Sunair part numbers, supplied with the RCU-9310 Remote Control Unit.

SUPPLIED EQUIPMENT:	SUNAIR MODEL /PART NUMBERS:
RCU-9310 Remote Control Unit	8078001291 O.D. 8078001258 GRAY
Hand Held Microphone Assembly	8076000602
Operation and Installation Manual	8078000502
Mating Connector Kit	8078000499
Power Cord Assembly, 115VAC	8076002095
or Power Cord Assembly, 230VAC	8076002192

1.7 OPTIONS AVAILABLE

The following is a list of optional equipment or accessories available for use with the RCU-9310 Remote Control Unit.

OPTIONAL EQUIPMENT/ACCESSORIES:	SUNAIR MODEL/PART NUMBERS:	
Headset	0840200005	
Headset (Lightweight)	1010690027	
CW Key with Phone Plug	5024000994	
Handset Assembly	8076000793	
Desktop Microphone	8076000891	
Shroud Kit for Rackmounting	1004770014 O.D. 1004770022 GRAY	
Power Cord Assembly, DC	8101002294	
Real-Time Clock (Smart Watch)	1011190010	
Phone Line Interface	8078500092	
12/28 VDC Converter PS-9015	8078600097	
Cable Assembly Audio and Control (made to length)	8078004591	
Field Module Kit	8078905092	
Audio to External Data Modems Cable Assembly Audio	8076004594	RT 9000 A CONN (LAN) 6 ft long with no connector on the RCU 9310 end

THIS PAGE INTENTIONALLY LEFT BLANK.

SECTION II

INSTALLATION

2.1 GENERAL

Section II contains all necessary instructions for unpacking, inspection, and, if required, reshipment of the equipment or parts. Information regarding location and mounting considerations, power requirements, ground system hookups, and cabling considerations is also provided.

2.2 UNPACKING AND INSPECTION

As soon as you have received your unit(s), unpack and inspect all components and accessories. Check the packing list to be sure you have received all items ordered, and that all items necessary for operation have been ordered.

NOTE: Be sure to retain the carton(s) and associated packing materials should it be necessary to reship the equipment.

Do not accept a shipment when there are visible signs of damage to the cartons until a complete inspection is made. If there is a shortage of items or any evidence of damage, insist on a notation to that effect on the shipping papers before signing the receipt from the carrier. If concealed damage is discovered after the shipment has been accepted, notify the carrier immediately in writing and await his inspection before making any disposition of the shipment. A full report of the damage should also be forwarded to Sunair's Product Services Department. Please be sure to include the following information for prompt service:

a) ORDER NUMBER.
b) MODEL AND SERIAL NUMBER.
c) NAME OF TRANSPORTATION AGENCY.
d) APPLICABLE DATES.

Upon receipt of this information, Sunair will make arrangements for repair or replacement.

2.3 RETURN OF EQUIPMENT TO FACTORY

The shipping carton for the RCU-9310 has been designed to protect the equipment during shipment. The container and its associated packing materials should be used to reship the equipment.

When necessary to return equipment to Sunair for warranty or non-warranty repair, an authorization number is required. This number can be obtained from our Product Services Department: TELEPHONE: (954) 525-1505, FACSIMILE: (954) 765-1322.

If the original shipping carton is not available, be sure to carefully pack each unit separately, using suitable cushioning material where necessary. Very special attention should be given to providing enough packing material around connectors and other protrusions from the unit. Rigid cardboard should be placed at the corners of the equipment to protect against denting. DO NOT USE DUNNAGE (e.g., STYROFOAM PEANUTS) FOR PACKING PROTECTION; it may allow the unit to shift while being shipped, and, therefore, become damaged.

When returning subassemblies or components for repair or replacement, be sure to pack each separately, using suitable cushioning material.

Shipment to be made PREPAID consigned to:

Sunair Electronics, Inc.
Product Services Department
3101 SW Third Avenue
Fort Lauderdale, Florida 33315-3389
U.S.A.

Plainly mark with indelible ink all mailing documents as follows:

US Goods Returned For Repair
Value For Customs - $(Amt.)

Mark ALL SIDES of the package:

FRAGILE - ELECTRONIC EQUIPMENT!

NOTE: Before shipping, carefully inspect the package to be sure it is marked properly and is securely wrapped.

2.4 GENERAL INSTALLATION AND MOUNTING INFORMATION

Satisfactory operation of this equipment will depend upon the care and thoroughness taken during installation.

2.4.1 GENERAL INSTALLATION

For installation and operation with KW equipment, modems, and other peripherals, use this manual in conjunction with their respective operating manuals for complete installation information.

Before starting installation, carefully plan equipment locations to ensure that the operating environment is suitable and that adequate access for maintenance is provided.

If operated on DC power, check for correct polarity before applying power.

The RCU-9310 Remote Control Unit and RT-9000 Transceiver are interconnected as shown in Figure 2.4.1.2.

NOTE: Figure 2.4.1.2 illustrates the direct cabling method for interconnecting the remote control unit and transceiver. While other interface methods may be employed, the relationship between remote control unit and transceiver signals must be maintained.

Connection of the RCU-9310 to power sources and other equipment may be accomplished as follows:

RCU-9310 CONNECTIVITY GUIDE.

TO ADD	CONNECTION(s)	NOTE
AC Power	AC source to J1 on rear panel.	See Figure 2.4.1.1.
DC Power (option)	DC source to J2 on rear panel.	See Figure 2.4.1.1.
Microphone	Microphone to J3 on front panel.	See Figure 2.4.1.1.
Headphones	Headphones to J2 on front panel.	See Figure 2.4.1.1.
CW Key	CW Key to J1 on front panel.	See Figure 2.4.1.1.
Transceiver (RT-9000)	Control Lines from J6 on rear panel to remote connector J8 on rear panel of RT-9000.	See Figures 2.4.1.1, 2.4.1.2, 2.4.1.3, and consult RT-9000 manual. Must be hardwired for mode that the system will use (i.e. RS-232, etc.)
	Audio lines from J4 on rear panel to Audio connector J5 on rear panel of RT-9000.	See Figures 2.4.1.1, 2.4.1.2, 2.4.1.4, and consult RT-9000 manual.
External Data Modems (Direct connection RCU-9310)	Connect modem audio and keyline to J3 on rear panel of RCU-9310.	See Figures 2.4.1.1 and 2.4.1.5.

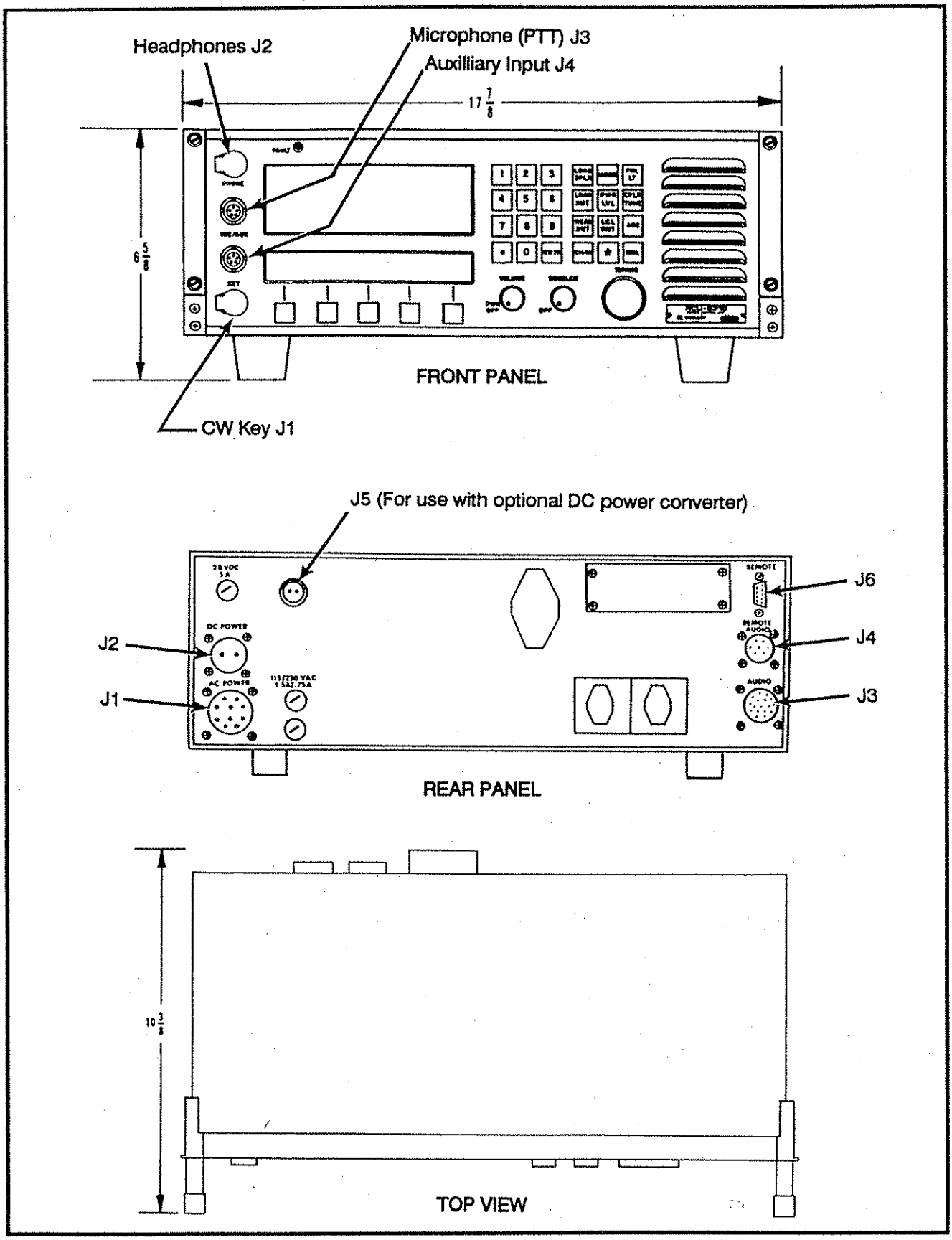

Figure 2.4.1.1 RCU-9310 Outline Dimensions and Connector Locations.

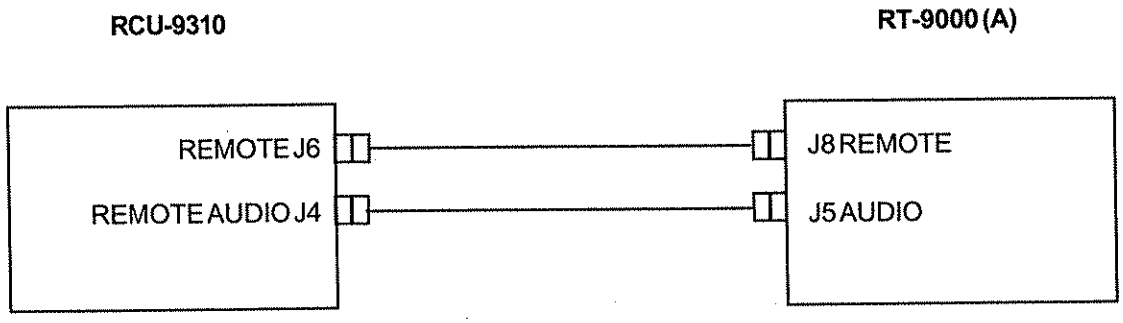

NOTE: Remote control cable must be hardwired for the control mode being used in the system (i.e. RS-232, FSK Tones, RS-422 or RS-485).

NOTE: If multiple RT-9000(A) are being controlled in the system, a mechanical switch or electrical switch must be installed at the RCU-9310 Remote audio in order to select Transmit and Receive audio to/from only one RT-9000(A) at a time.

Figure 2.4.1.2 Interconnection of RCU-9310 Remote Control Unit and RT-9000 Receiver.

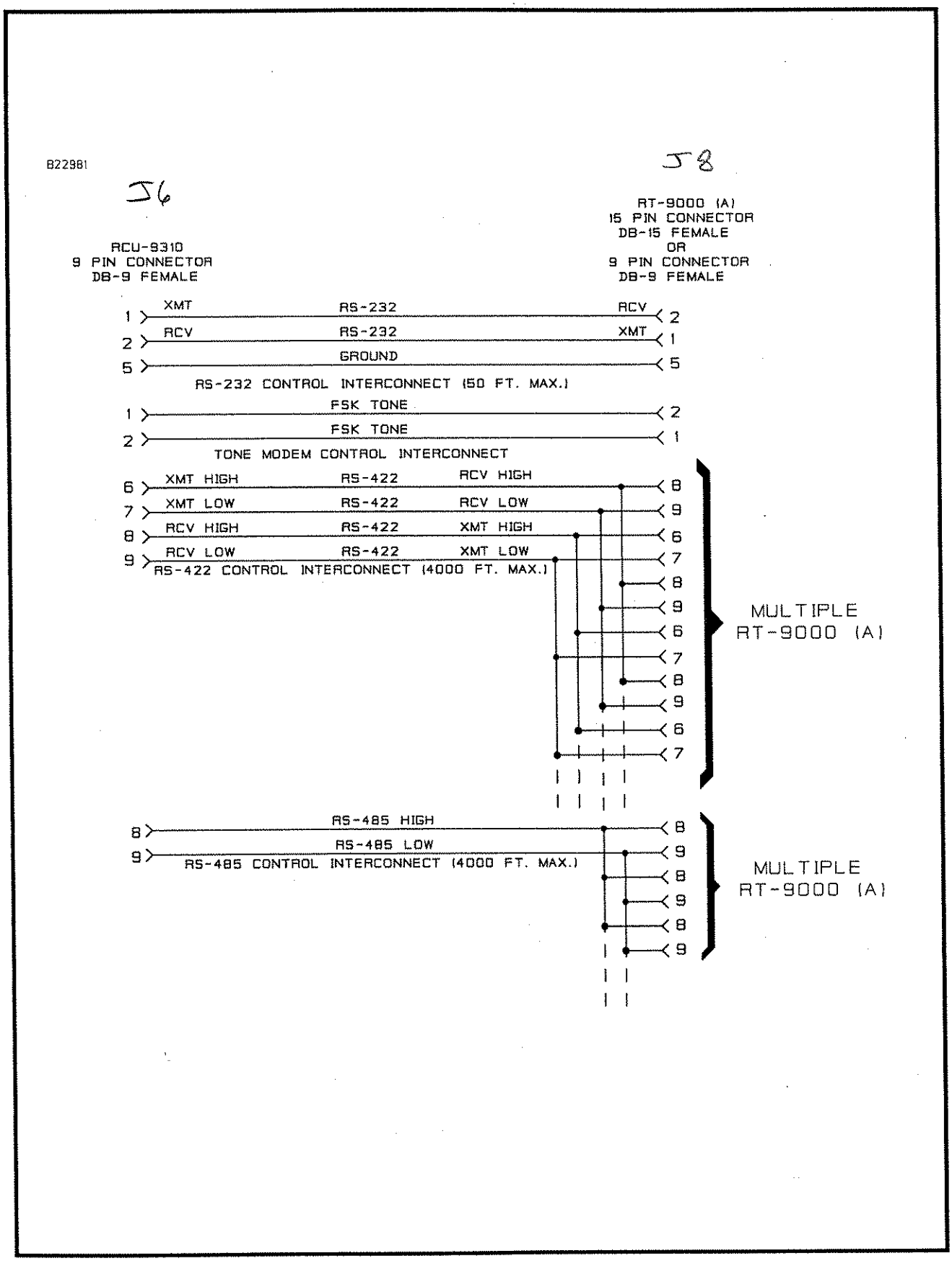

Figure 2.4.1.3 FSK, RS232, RS-422, or RS485 Wiring Diagrams.

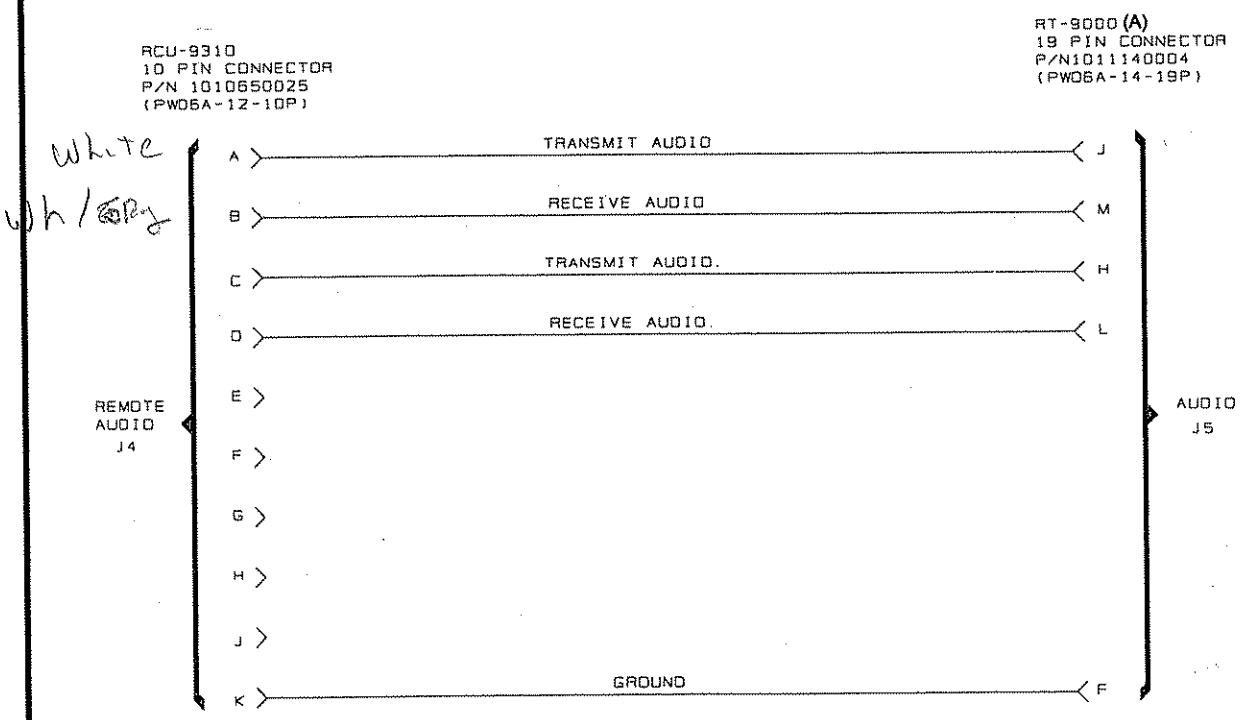

Figure 2.4.1.4 RCU-9310 Remote Audio to RT-9000 (A) Audio Wiring Diagram.

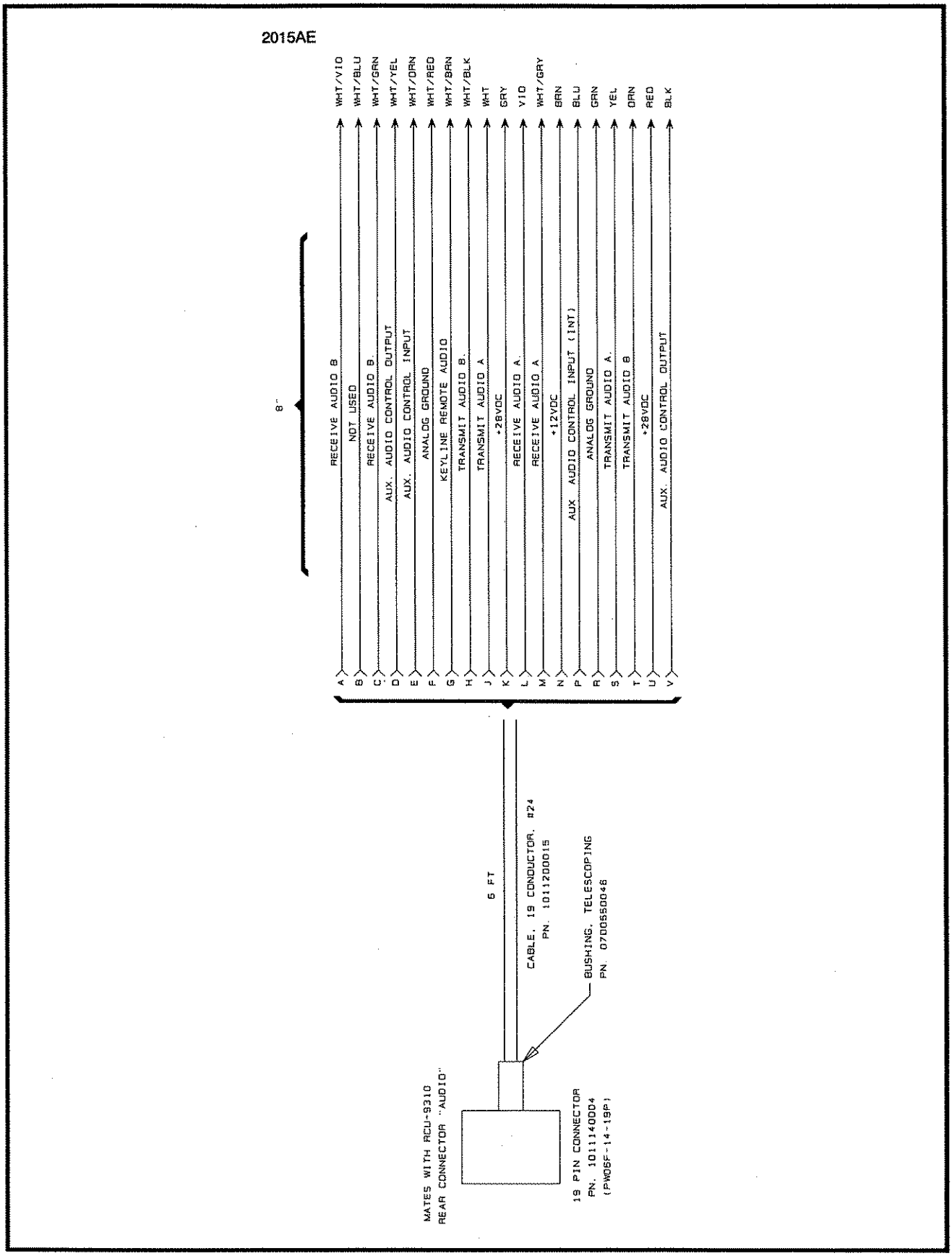

Figure 2.4.1.5 RCU-9310 Audio to External Data Modems Wiring Diagram.

2.4.2 BASE STATION INSTALLATION

The RCU-9310 is equipped with rubber feet so that it can be placed directly on a table, desk, or similar flat surface. Minimum clearances of one (1) inch at the sides and two (2) inches at the rear and top should be allowed to provide for adequate air flow. Figure 2.4.1.1, shows the applicable outline dimensions of the equipment and the location of input/output connectors for microphones, remote units, modems, signal lines, and AC and DC power.

2.4.3 RACK INSTALLATIONS

The remote control unit may be mounted in a standard nineteen-inch (19") rack using the Shroud Kit, Sunair p/n 1004770014(OD) or 1004770022(Gray). The kit includes rack mounting brackets, filler panels and trim strips, and associated hardware. In the rack-mounted configuration, the remote control unit requires a standard panel space of seven inches (7") high. Refer to Figure 2.4.3 below, for assembly details.

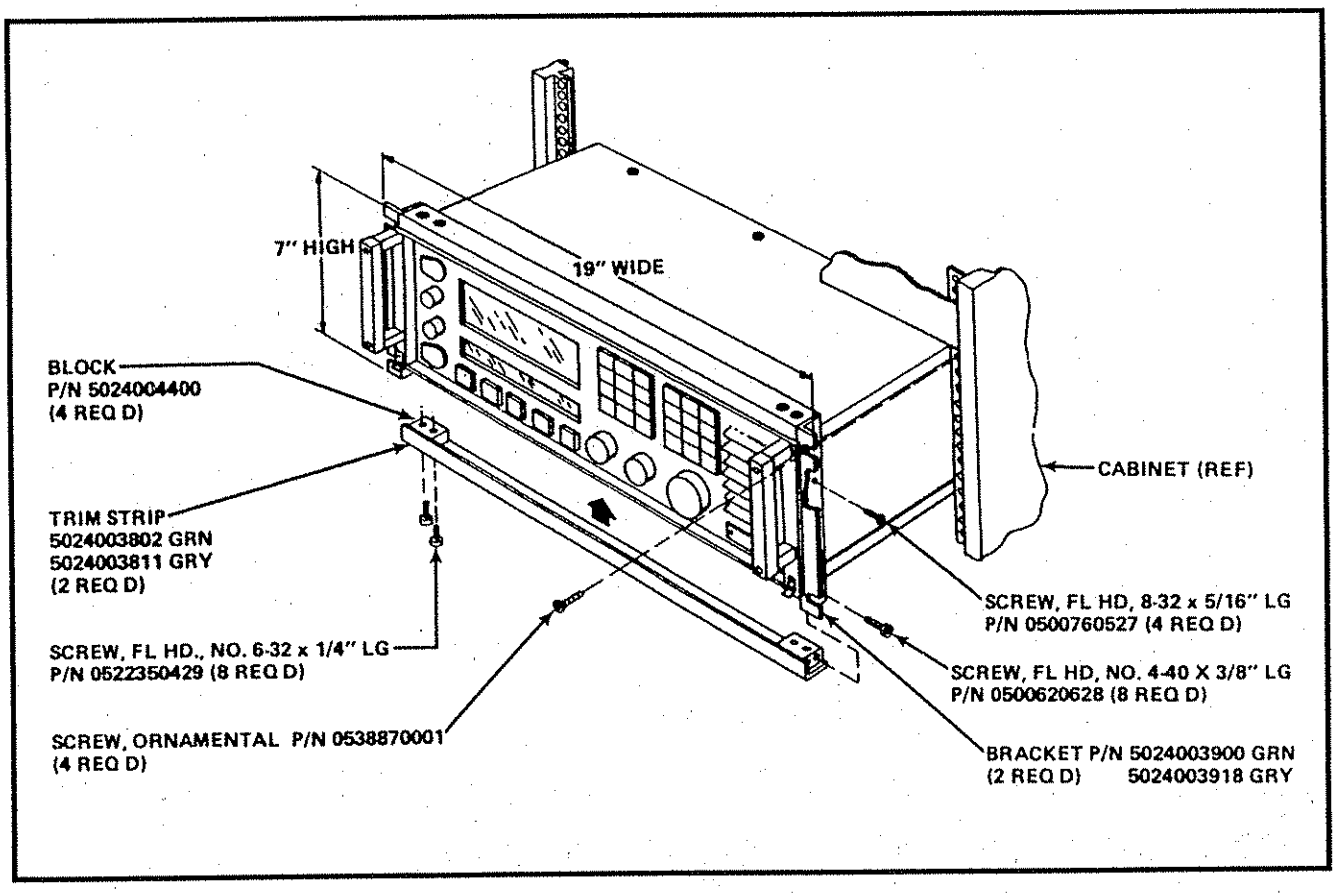

Figure 2.4.3 Installation of RCU-9310 in Equipment Rack.

THIS PAGE INTENTIONALLY LEFT BLANK.

SECTION III

OPERATION

3.1 GENERAL

This section provides the operator with the location and use of the RCU-9310 front panel controls for proper utilization of the equipment. For convenience of discussion, functions are addressed in normal sequence. However, it is not necessary to observe this order once the user becomes familiar with the equipment. Any setting may be changed independently by referring to the appropriate section in this chapter pertaining to the function in question. Reference to Figure 3.1.1 below, shows the location of the control groupings, displays, and their general purpose.

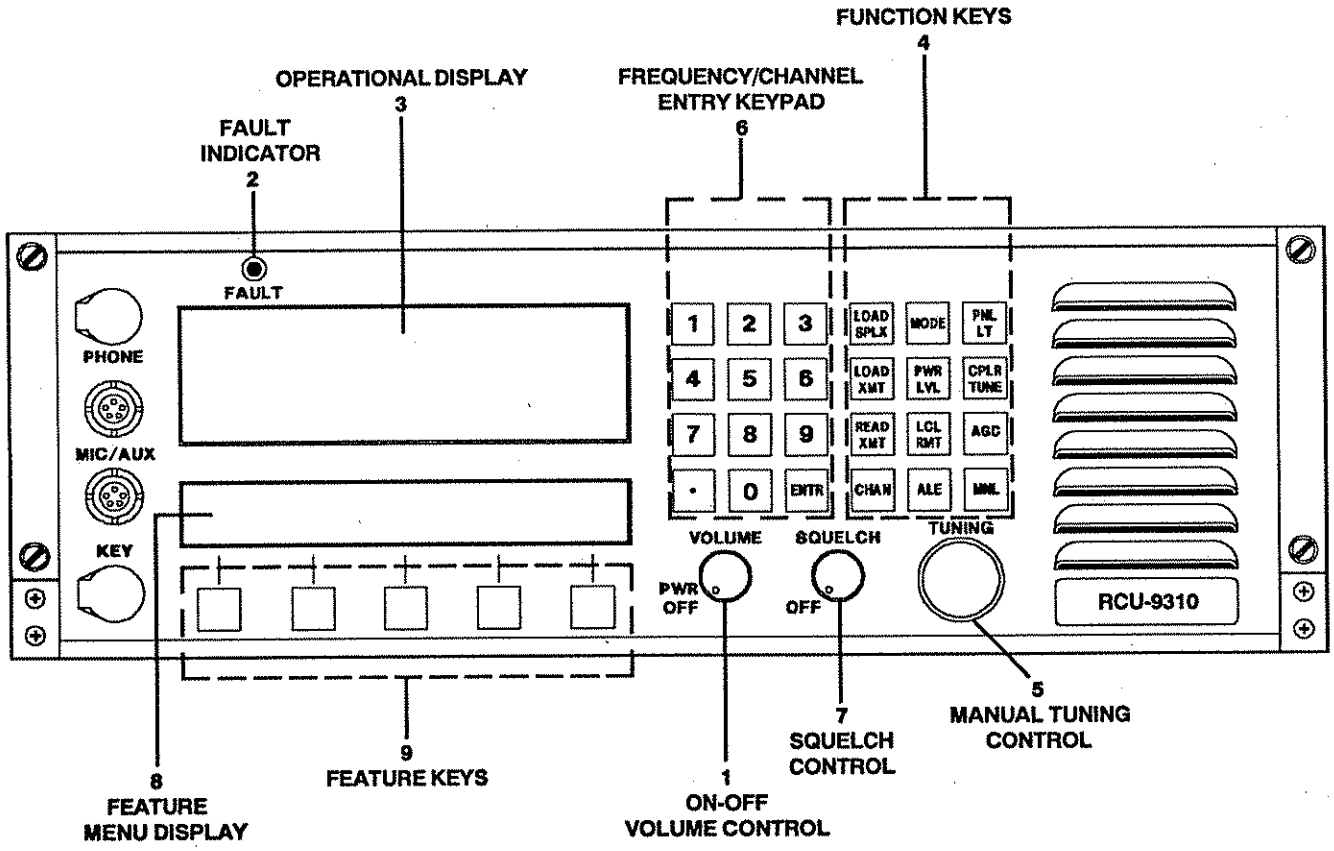

Figure 3.1.1 Front panel controls for the RCU-9310.

1 ON/OFF VOLUME CONTROL

When this control is in the full counterclockwise position, the equipment is off. To apply power simply turn the control clockwise. Once on, the audio signals to the internal speaker are initially at minimum. More speaker audio is achieved by advancing the volume control clockwise to a comfortable listening level.

NOTE: The setting of this control does not affect the level of the remote audio output located at the rear surface of the equipment.

2 FAULT INDICATOR

If at any time this red indicator is lit, there is a fault in the remote control unit or in the transceiver. Please check the installation and proceed to the section on BITE, located in section 3.3.1 of this manual.

3 OPERATIONAL DISPLAY

This Liquid Crystal Display (LCD), provides a variety of information required to operate the equipment. Information will appear in four (4) primary areas of the display as indicated in Figure 3.1.2.

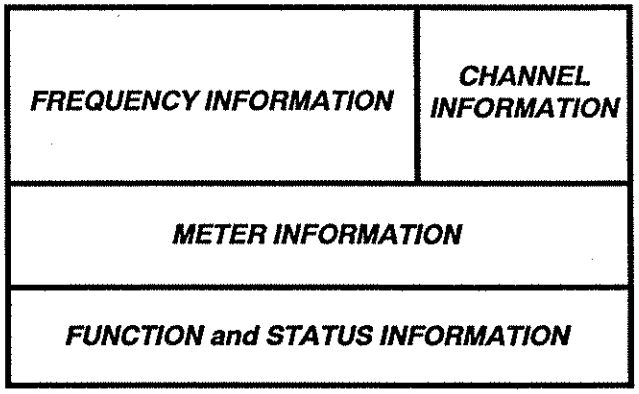

Figure 3.1.2 Operational Display Information Location.

4 FUNCTION KEYS

This grouping of twelve (12) keys are used to control or establish the primary operating functions of the equipment such as mode selection, channel selection, channel loading, AGC characteristic, local/remote operation, power output level selection, panel illumination, coupler tune command, and manual transceiver tuning.

5 MANUAL TUNING CONTROL

This control permits manual tuning of the transceiver frequency or channels. Actual movement of frequency will be indicated on the operational display.

6 FREQUENCY/CHANNEL ENTRY KEYS

This group of twelve (12) numeric keys is used for entry of frequency or channel information, either to establish a particular operating frequency or load frequency information into channel storage for later recall.

7 SQUELCH CONTROL

When this control is in the fully counterclockwise position the equipment is unsquelched. To enable the squelch, turn the control clockwise to the desired threshold (signal strength required to unsquelch receiver). The greater the clockwise setting of the control, the greater the signal strength required to open the squelch.

8 FEATURE MENU DISPLAY

This display provides names or functions for the five (5) keys located directly below the display. In most cases, this display will automatically indicate the appropriate selections based upon the condition of other equipment settings. The menu may be changed at will, however, by depression of the fifth key located under 'MORE'.

9 FEATURE KEYS

This grouping of five (5) 'SOFT' keys will enable the various functions indicated in the display located directly above the key.

NOTE: An asterisk (*) appearing in the display indicates that the feature preceding it is enabled or 'ON'.

Utilization of the controls of the RCU-9310 Remote Control Unit can be divided into three categories:

A. Primary Operations (Section 3.2),

B. Equipment Set Up (Section 3.3), and

C. Advanced Operations (Section 3.4).

3.2 PRIMARY OPERATIONS

NOTE: Except where noted, all procedures are based on operating the RT-9000 Transceiver from the RCU-9310 Remote Control Unit. Prior to performing any of these operations, the remote control unit must be established as the point of control. See page 3-22, section 3.3.6 I/O Port Set Up.

NOTE: If an antenna coupler (such as the CU-9125) is connected to the transceiver, the message

'COUPLER UNTUNED'

will appear periodically on the status screen. This is just a reminder and will not limit the following instructions.

3.2.1 REMOTE TRANSCEIVER SET UP FOR MODE, AGC AND TRANSMIT POWER

Prior to performing any transceiver operations with the RCU-9310, you must ensure that the transceiver is turned on and properly connected to the remote control unit. After verifying these conditions, refer to Figure 3.2.1 and perform the following steps to establish RCU-9310 control over the transceiver.

Turn the remote control unit on **1** and advance the volume control to a comfortable listening level. The operational display should appear as indicated in figure 3.2.1, except that specific channel and modes will reflect the condition of the equipment when last used.

8 This section of the operational display indicates the point of control of the transceiver and should read 'RMT'(Remote).

Depress the 'LCL/RMT' key **9** . The operational display **8** should read 'LCL'. At this point, the operational display will reflect the condition of the transceiver. To change control back to the transceiver simply depress the 'LCL/RMT'(Local/Remote) key **9** .

Depress 'MODE' key **2** , to select the desired mode of transmission and reception as indicated in the display segment at **3** . Choices are 'USB', 'LSB', 'CW', and 'AM'. If the Data filter option has been installed in the RT-9000 Transceiver 'DATA' will be displayed.

Depress 'AGC' key **4** , to select AGC Characteristic, which will be indicated in the display segment at **5.** Choices are 'AGC-S' (Slow), 'AGC-M'(Medium), and 'AGC- F'(Fast). A slow AGC characteristic is generally desirable with speech transmission. A fast AGC characteristic is desirable for data transmission.

Transmitter power output **6** is indicated in this segment of the operational display and will normally read '125W'(Watts). If '65W'(Watts) is desired, then depressing the 'PWR LVL'(Power Level) Key **7** will condition the transceiver accordingly.

NOTE: Since the RT-9000 is frequently used with a one kilowatt Linear Power Amplifier (LPA), provisions have been made in the system for adjustment to the '1000W'(Watt) and '500W'(Watt) levels as well, if the LPA is connected to the output of the tranceiver.

NOTE: If the transceiver is not turned on or not connected to the remote control unit, the message

'PLEASE WAIT'
(followed by)
'NO REPLY FROM REMOTE'

will appear momentarily on the operational display when the 'LCL/ RMT' key is depressed.

NOTE: When the equipment is in the RMT (Remote) condition, any attempt to change frequencies, modes or other functions, except Local/ Remote, will cause the messages

'FUNCTION DISALLOWED'
(followed by)
'UNIT IN REMOTE MODE'
to appear momentarily on the operational display.

THE BASIC FUNCTIONAL PARAMETERS OF THE REMOTE TRANSCEIVER HAVE NOW BEEN ESTABLISHED.

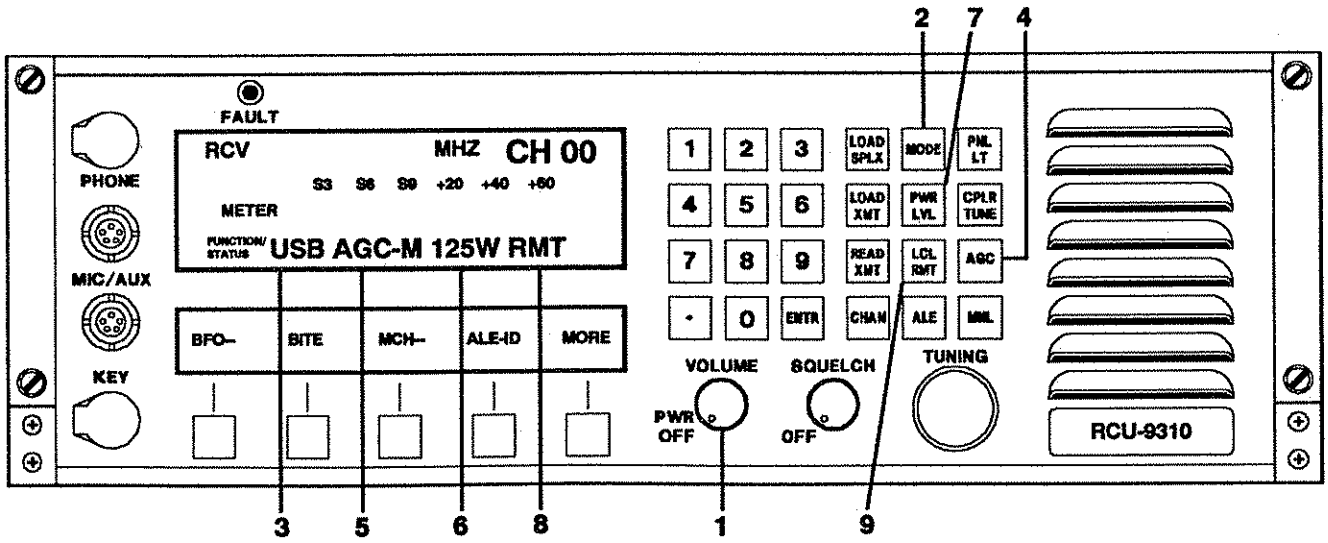

Figure 3.2.1 RCU-9310 Remote Control Display Screens.

3.2.2 ESTABLISHING AN OPERATING FREQUENCY

1 If operational display does not read 'M'(Manual Operation), refer to Figure 3.2.2, then depress 'MNL' key **2** . The display will now read 'M'. (The RCU-9310's feature menu display will also read as indicated in **7** . Depression of the 'LOAD SPLX'(Load Simplex) key, **3** , will blank the operational display frequency located at **4** , and change feature display to provide 'ERASE' and 'END' functions.

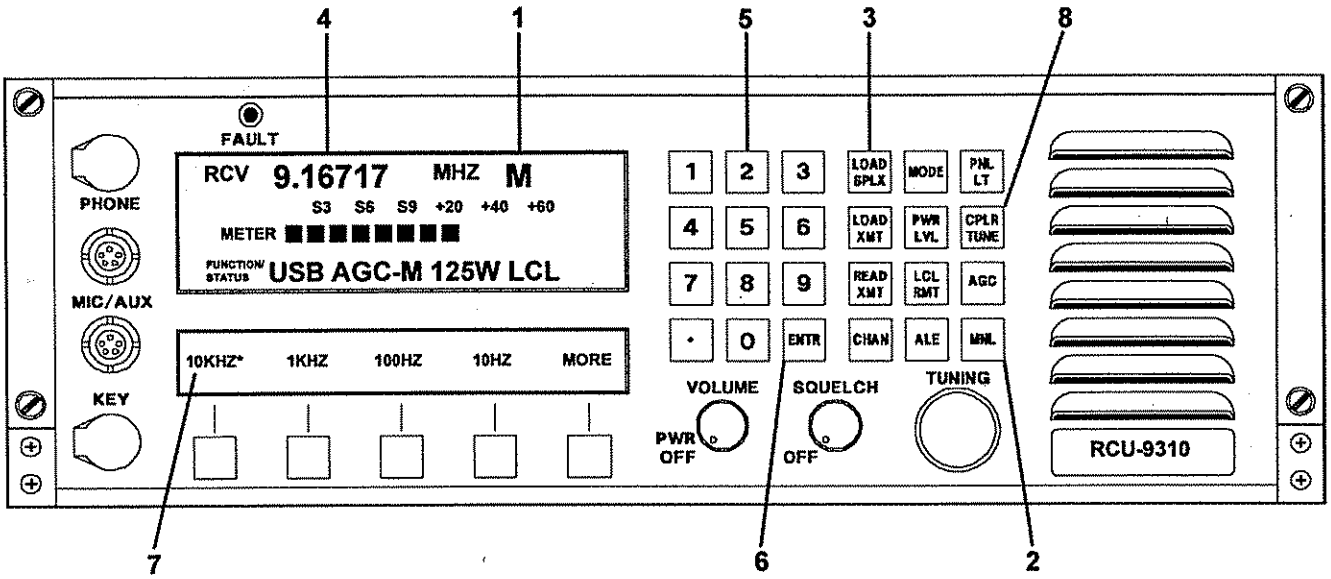

Figure 3.2.2 RCU-9310 Operating Controls.

The numeric keypad, **5** , may now be used to enter any operational frequency by entering seven digits. (For frequencies less than 10MHz, the first digit entered must be '0'. The numbers being entered will appear on the operational display at **4** , in the order of entry from left to right. When seven digits have been entered depress the 'ENTER' key, **6** , to activate the transceiver.

THE TRANSCEIVER IS NOW OPERATIONAL ON THE FREQUENCY SELECTED

NOTE: If an error is made in entering a frequency, simply depress the 'LOAD SPLX' key to clear the display and repeat the procedure.

NOTE: If a frequency below 100kHz is entered, the frequency will flash on and off.

NOTE: If a frequency between 100kHz and 1.59999MHz is entered, it will be accepted and the receiver will function normally. If the transceiver is keyed however, the frequency will flash on the display and the message 'ILLEGAL XMT FREQ' will appear on the operational display.

3.2.3 TRANSMIT TUNING

If the transceiver output is terminated in a Broad Band Antenna, or is feeding a Linear Power Amplifier such as the LPA 9600, whose termination is a Broad Band Antenna, transmitter tuning occurs automatically and:

THE TRANSCEIVER IS NOW FULLY OPERATIONAL

3.2.4 ANTENNA COUPLER TUNING

Once an operating frequency has been selected, as described in section 3.2.2, the transmitter section of the transceiver is automatically tuned to the same frequency (Simplex Operation). If the transceiver output is fed to an antenna coupler (such as the CU-9125), or is connected to a Linear Power Amplifier that in turn feeds an antenna coupler (such as the CU-9100), depression of the 'CPLR TUNE' key, located at **8** , in Figure 3.2.2 will initiate the tune cycle. During this time (a few seconds or less), the message

'COUPLER TUNING'

will appear on the operational display. When coupler tuning has been completed, the message

'SYSTEM READY'

will appear on the operational display.

THE TRANSCEIVER IS NOW FULLY OPERATIONAL

NOTE: If there is no antenna coupler in the system, depression of the 'CPLR TUNE' key will produce the message

'NO ANTENNA COUPLER'

on the operational display.

NOTE: If the coupler is unable to tune the antenna within 10 seconds, the message

'SYSTEM FAULT'

will appear on the operational display. If this occurs, check the installation and the antenna. If all appears in order, proceed to the troubleshooting section of the coupler manual.

NOTE: If the coupler remains in the tune mode for longer than 10 seconds the message

'COUPLER FAULT'

will appear on the operational display. If this occurs, proceed to the troubleshooting section of the coupler manual.

3.2.5 MANUAL TUNING

Once an initial operating frequency has been established and the RCU-9310 is in the 'M'(Manual) mode as indicated by **1** , in Figure 3.2.5, frequency can be increased or decreased by: Turning the 'Tuning' control **2** clockwise to increase frequency or counterclockwise to decrease frequency.

The rate at which the frequency is moved (the increments or frequency 'steps') is indicated in the feature menu display at **3** .

The location of the asterisk (*) **4** , indicates the incremental change in frequency which rotation of the tuning control will produce, in this case 10kHz. To change this rate to 1kHz, 100Hz or 10Hz, simply depress thefeature key **5** located below the desired setting. The asterisk (*) will move to indicate the increment selected.

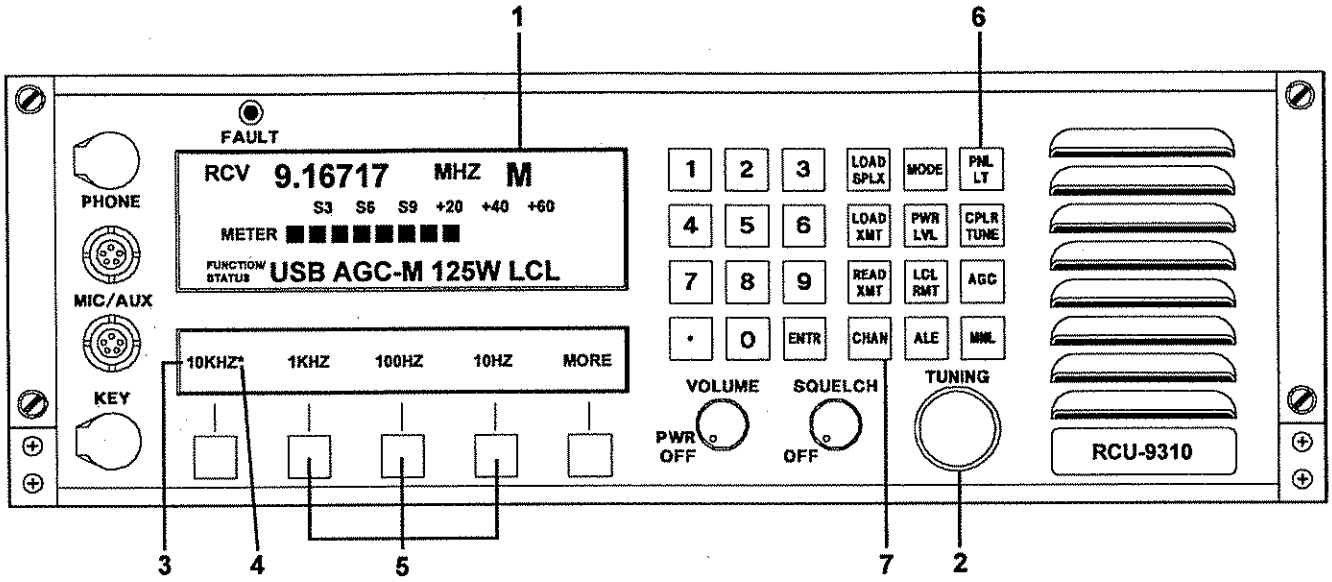

Figure 3.2.5 RCU-9310 Operating Controls.

NOTE: Whenever the frequency is changed it will be necessary to retune the antenna coupler, if present, by depressing the 'CPLR TUNE' key. (See section 3.2.4 for more detailed information.)

To exit 'MANUAL TUNING' depress the "CHAN" key **7** .

3.2.6 PANEL LIGHTING

At initial turn ON the Panel Lighting will be illuminated. If no keyboard activity has been detected for approximately 30 minutes the unit will automatically turn OFF the Panel Lighting. Both the operational and feature menu displays may be illuminated by depressing the 'PNL LT' key located at **6** in Figure 3.2.5. A second depression will turn the lighting off.

NOTE: This is strictly a 'Local' function; i.e., it does not affect the remote transceiver in any way.

NOTE: The backlighting devices for the two (2) Front Panel LCD's will gradually lose their luminescence with time. For this reason the Panel Light should be turned OFF whenever possible. See Section V for replacement of backlight devices.

3.2.7 OPERATING WITH PRESET CHANNELS

Operation using preset channel frequencies can only be accomplished if the desired frequencies have been entered into the memory of the transceiver. If this has not been accomplished refer to section 3.2.9 prior to proceeding.

If equipment is not on, turn the equipment on by advancing the volume control **1** to a comfortable listening level.

Depress the 'LCL/RMT' key **9** . The operational display **10** should read 'LCL'.

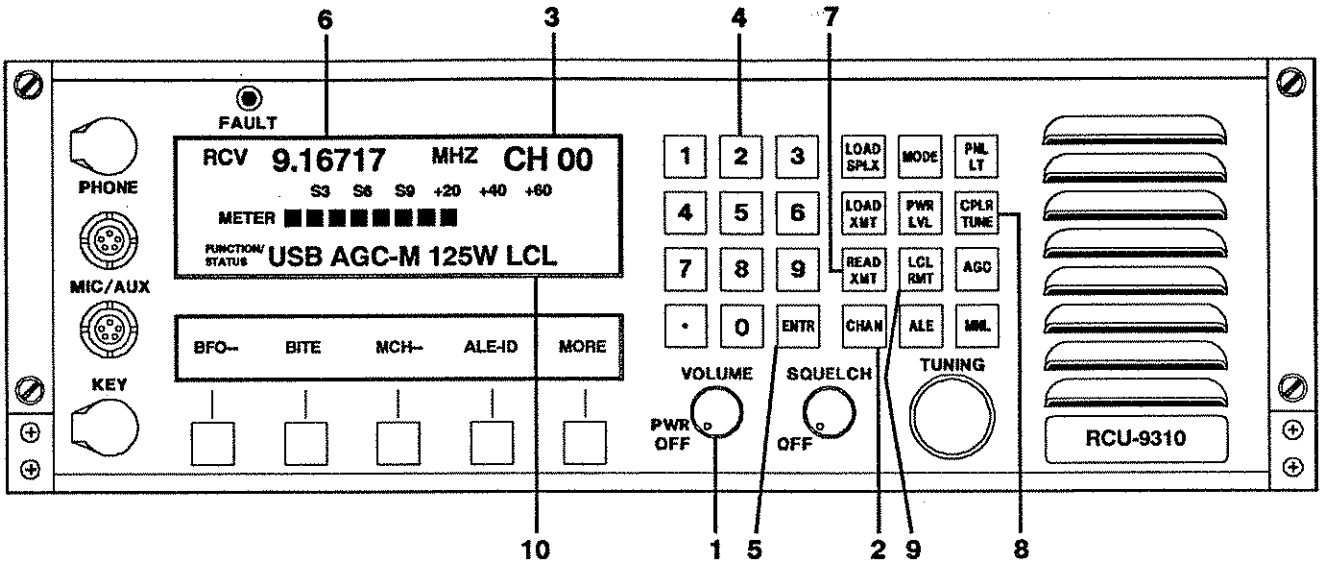

Figure 3.2.7 RCU-9310 Operating Controls.

2 Depress the 'CHAN'(Channel) key to blank the channel number appearing at **3** .

4 Enter any channel number from 00-127 using the numeric keypad. The number entered will be shown on the operational display at **3** .

5 Depress the 'ENTER' key. The receive operating frequency stored for the channel entered will now appear on the operational display at **6** .

NOTE: If the channel entered had been set up for half-duplex operation (i.e. a different transmit frequency), the transmit frequency may be viewed at **6** by depressing the 'READ XMT' key **7** .

If present, the system coupler may now be tuned by depressing the 'CPLR TUNE' key **8** . See section 3.2.4 for more detailed instructions.

THE SYSTEM IS NOW FULLY OPERATIONAL ON THE CHANNEL SELECTED.

3.2.8 MANUAL CHANNEL SCANNING

Once the equipment is in the preset channel mode of operation as outlined in section 3.2.7, all of the channels programmed may be viewed and/or used by:

Depress equipment 'Feature' menu 'MORE' key, **1** , until the feature menu display **2** reads as shown in Figure 3.2.8.

Depress 'MCH'(Manual Channel) key **3** . The CH designator preceding the channel number on the operational display at **4** will change to 'MC'(Manual Channel) and an asterisk (*) will appear next to 'M CH -' in the feature display, denoting that the selected function has been enabled.

Rotation of the tuning control **5** will increase or decrease channel numbers **6** (in order) and the associated stored operating frequency will appear in the operational display at **7** .

NOTE: 'MODE' and 'AGC Characteristic' are also pre-programmable for each channel and may change in the operational display as the tuning control is rotated.

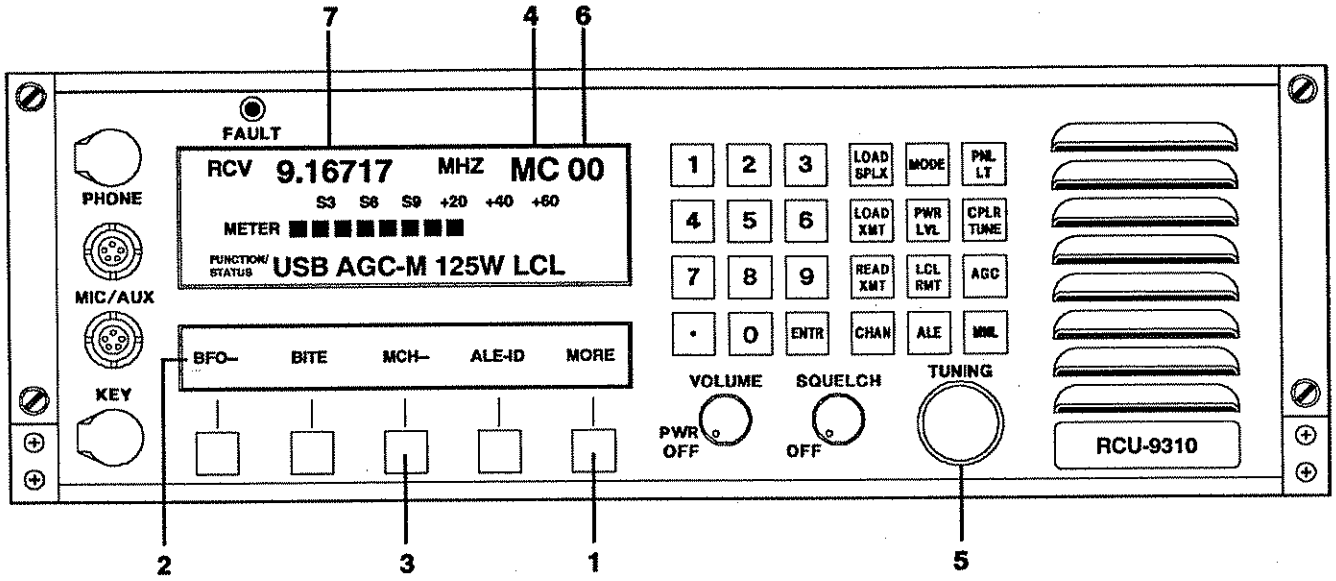

Figure 3.2.8 RCU-9310 Operational Controls.

The RCU-9310 may be set on any channel and the transceiver is fully operational and ready for coupler tuning, if required. The coupler may be tuned by depressing the 'CPLR TUNE' key and waiting for the 'SYSTEM READY' message to appear on the display. See section 3.2.4 for more detailed instructions.

NOTE: This mode provides a rapid means of logging pre-stored channel information, if unknown.

Escaping from this method of operation may be achieved by simply depressing the 'MCH-' key **3** again. The asterisk (*) will disappear. The 'MC' designator at **4** will revert to 'CH', and the channel number **6** and frequency **7** will remain where last left in the manual channel scan operation.

Changing from the displayed channel to any other may be accomplished as described in section 3.2.7.

3.2.9 LOADING PRESET CHANNEL FREQUENCIES

The RCU-9310 is capable of loading operating information on 128 preset channels (numbers 00-127) in the RT-9000 for later recall and use. For each channel the operating information to be loaded consists of:

A. Receive Frequency
B. Transmit Frequency (if different)
C. Mode of Emission
D. AGC Speed
E. Power Level

The following procedure, referring to Figure 3.2.9.1, should be followed to enable proper loading of channels.

If the equipment is not on, turn on by advancing the volume control **1** clockwise to a comfortable listening level, select 'LCL' operation. Depress the 'CHAN'(Channel) key, **2** . The operational display will now read 'CH' at **3** and blank at **4** .

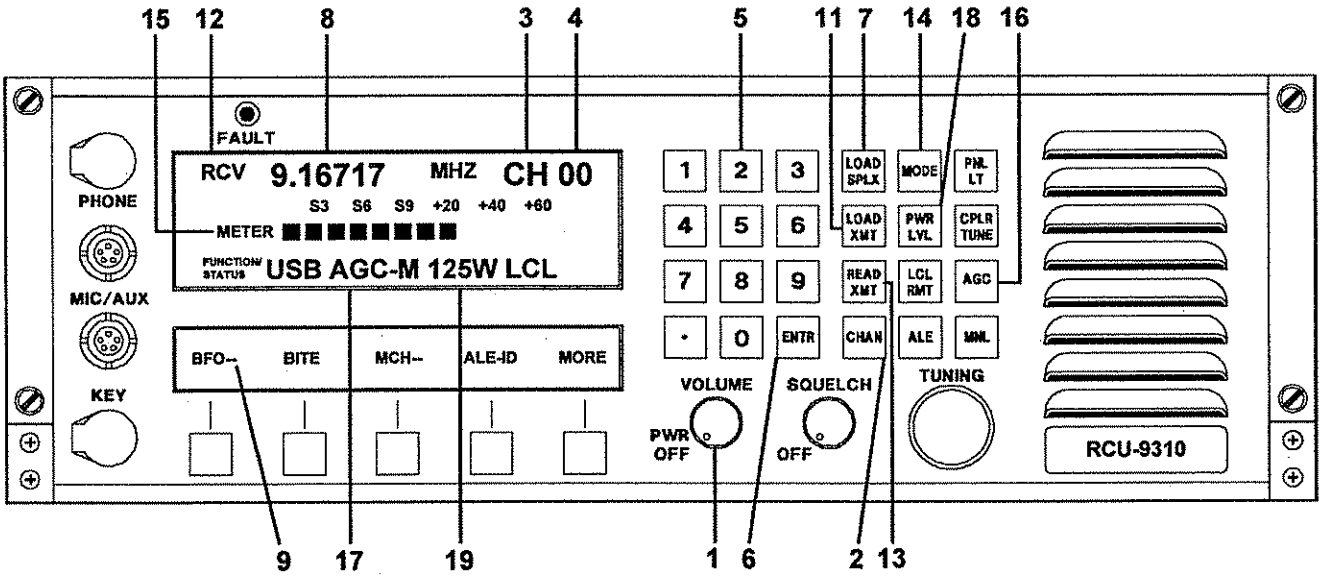

Figure 3.2.9.1 RCU-9310 Channel Loading Controls.

Use the numeric keypad **5** to enter the channel number. Enter a '0' first for a number less than 10. Depress the 'ENTER' key, **6** . The channel number to be programmed will now appear at **4** .

Once the desired channel number has been selected, operational information may be entered as follows:

A. <u>To load the Receive Frequency</u> depress the 'LOAD SPLX' key **7** . The frequency display at **8** will now be blank.

Enter the desired receive, or operating, frequency (Seven digits are required. Enter '0' first if frequency is less than 10 MHz.) Using the numeric keypad **5** . The entered frequency will appear in order of digit entry (left to right) on the operational display at **8** .

NOTE: When the 'LOAD SPLX' key is depressed, the equipment feature menu display **9** will change to provide an 'ERASE' function at **10** . As shown in Figure 3.2.9.2. Depression of this key will erase the numeric frequency entry, one digit at a time, beginning with the last digit entered (right to left). When the desired digits are blanked, simply resume keypad entry of frequency. Do not depress 'END' key **20** unless you desire to abort frequency loading and have the channel revert to its original stored information.

Once the desired receive frequency has been entered, depress the 'ENTER' key **6** .

NOTE: Whatever receive frequency was entered in the above process is also automatically entered as a transmit frequency by the 'LOAD SPLX' (Load Simplex) key. If Operation is to be simplex (identical transmit and receive frequencies) then step **B)** below may be omitted.

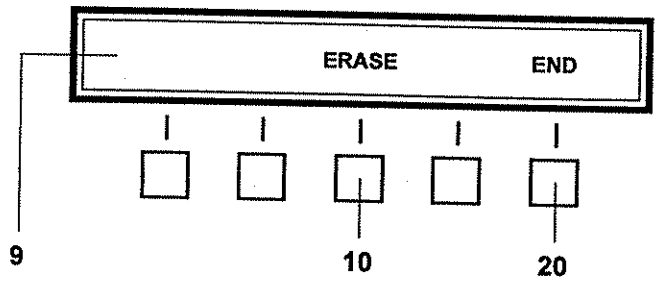

Figure 3.2.9.2 RCU-9310 'Feature Display'.

B. To load the Transmit Frequency, depress the 'LOAD XMT'(Load Transmit) key **11** . The frequency display at **8** will blank and the designator at **12** will change from 'RCV'(Receive) to 'XMT'(Transmit).

As before, enter the desired seven digit transmitter frequency and depress the 'ENTER' key **6** . The operational display at **8** will continue to show the entered transmit frequency briefly and then revert to its normal display of the receive frequency for that channel.

NOTE: The stored transmit frequency for any channel may be viewed by depressing the 'READ XMT' key **13** . The transmit frequency will be displayed briefly, then revert to the normal receive frequency display.

C. To load Mode of Emission, depress the 'MODE' key **14** successively until the desired mode appears on the operational display at **15** . Choices are: 'USB', 'LSB', 'CW', or 'AM'. Depress 'ENTER' key twice **6**.

NOTE: 'DATA' will be displayed only if Data option filter is installed in the RT-9000 Transceiver, and appropriate CPU DIP switch setting has been selected (Refer to Section V) in the Transceiver and Control Unit.

NOTE: If 'CW' is selected as a mode of emission, key release time and filter selections are automatically established by default to medium and normal respectively. Other choices are available and are covered in section 3.3.8 of this manual.

D. To load AGC speed, depress the 'AGC' key **16** successively until the desired speed appears on the operational display at **17** . Choices are 'AGC-S'(Slow), 'AGC-M'(Medium), and 'AGC-F'(Fast). Depress the 'ENTER' key **6** .

NOTE: If the mode of emission selected for this channel is 'DATA', a Fast AGC speed is automatically selected. Any attempt to select another speed will cause the message

'FUNCTION DISALLOWED'

to appear on the operational display for a brief period of time.

NOTE: If the mode of emission selected for this channel is "AM", a fast AGC speed is automatically selected. If another AGC speed is desired, depress the "AGC" key, **16** successively until the desired speed appears on the operational display at **17** .

E. To load Power Level, depress the 'PWR LVL' key **18** until desired power level appears on the operational display at **19**. Choices are '65W' or '125W' (with external LPA-9600 additional choices are '500W' and '1000W'). Depress the ENTER key **6** .

All of the storage data for this channel has now been entered and the transceiver is fully operational on this channel. Additional channels may be loaded by simply repeating this process.

3.2.10 BFO OPERATION

To use the BFO the feature display must indicate the menu shown at **1** in Figure 3.2.10. If this menu is not displayed depress the menu select key 'MORE' **2** successively until indicated menu appears.

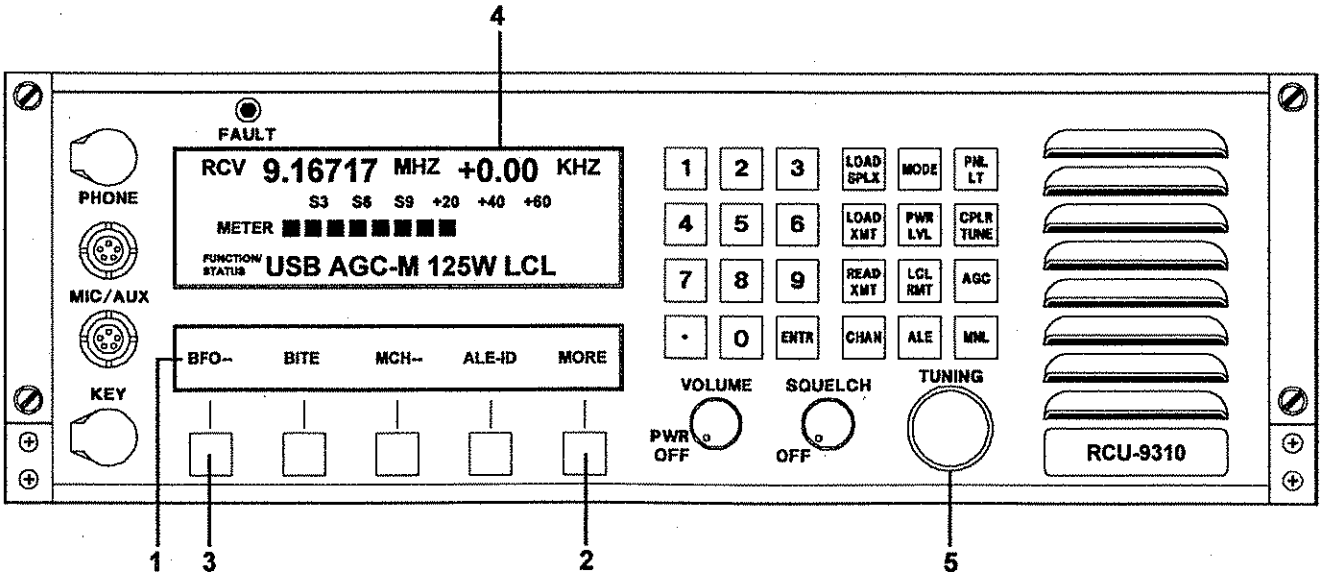

Figure 3.2.10 RCU-9310 Displays, with BFO Enabled.

Depress the 'BFO' feature key **3** . An asterisk (*) will appear next to 'BFO' in the feature menu display indicating that this function is now enabled. The Channel No., screen **4** in the operational display will blank and the BFO offset (initially: +0.00kHz) will appear.

The BFO offset may now be established anywhere within a ±1.99kHz range by rotation of the tuning control **5** . The offset frequency is increased in 10Hz steps by clockwise rotation of this control and decreased (negative) by counterclockwise rotation.

The BFO is disabled by simply depressing the 'BFO' feature key **3** again.

NOTE: BFO offset frequency is established only for the USB, LSB, CW, and Data Mode of the receive section of the transceiver. The transmit frequency remains unaffected and is as indicated on the operational display.

3.3 EQUIPMENT SET UP

This section addresses those features and functions that are either of secondary importance or need be accomplished only infrequently, usually at the time of commissioning.

3.3.1 BITE (Built In Test Equipment)

The RCU-9310 Remote Control Unit and its companion RT-9000 transceiver are both equipped with sufficient self-diagnostics to assure operators or maintenance personnel that all internal subassemblies (LRU's) are functioning correctly; or, in the case of a malfunction, which specific LRU(s) is (are) faulty. This feature may be accessed independently of any prior established modes of operation.

The user may access and execute both of the BITE programs -- the RT-9000 and the RCU-9310 -- from the remote control unit.

Refer to Figure 3.3.1.1 and perform the following steps to access the BITE menu.

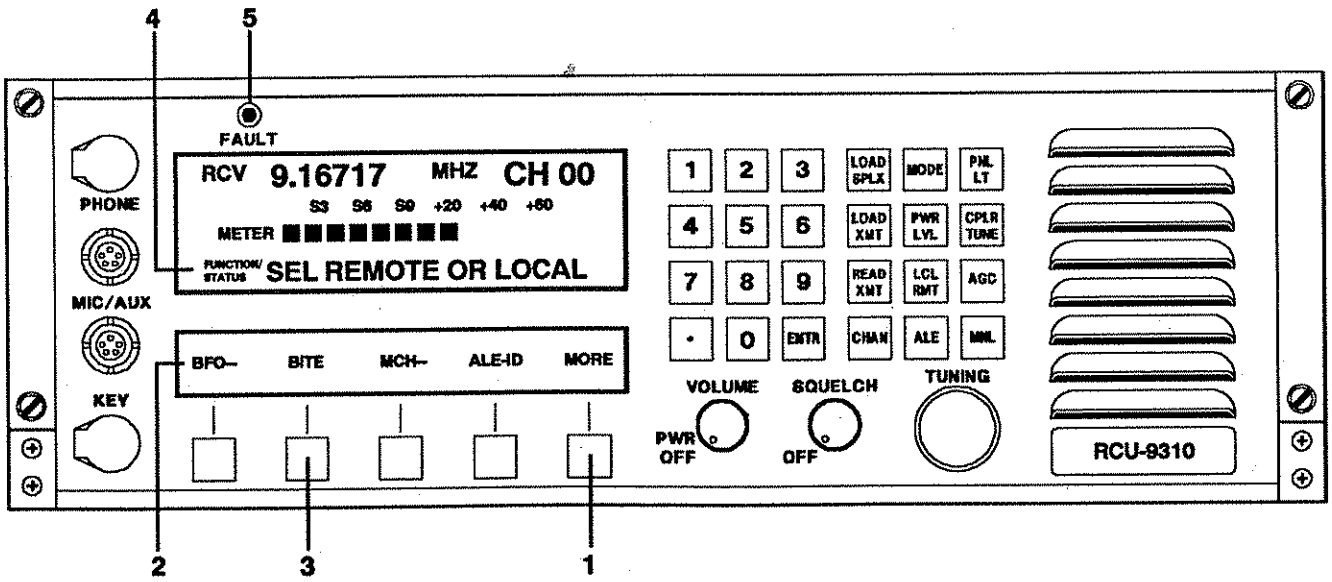

Figure 3.3.1.1 RCU-9310 Feature Menu, BITE Selection.

Depress the 'MORE' key **1** successively until the Feature Menu Display **2** shown in Figure 3.3.1.1 appears.

Depress the 'BITE' key **3** . The message

'SEL REMOTE OR LOCAL'

will appear on the operational display **4** , and the BITE submenu shown in Figure 3.3.1.2 will be displayed on the feature menu display.

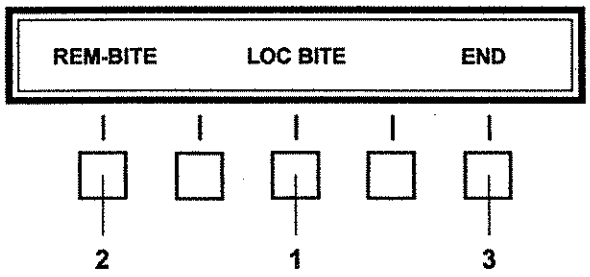

Figure 3.3.1.2 RCU-9310 BITE Submenu.

3.3.1.1 REMOTE CONTROL UNIT SELF-TEST (LOCAL BITE)

The RCU-9310 Remote Control Unit can be tested independently, with or without a transceiver connected.

To execute the remote control unit's self-contained BITE program, refer to Figure 3.3.1.2 and perform the following steps.

Depress the 'LOC BITE' key **1** . The RCU-9310 will initiate a self-test routine and will display messages and/or results on the operational display. The initial message will be

'BITE IN PROGRESS'

As each module is tested, a corresponding message will appear briefly on the operational display in the following order:

'FRONT PANEL O.K.'

'CPU O.K.'

'POWER SUPPLY O.K.'

'I/O O.K.'

NOTE: Audio tone is heard in speaker at this point and turned off at 'TEST COMPLETED'.

'AUDIO O.K.'

At the successful conclusion of the test, the message

'TEST COMPLETED'

will appear on the operational display. To return the remote control unit to its operational state, depress the 'END' key **3** Figure 3.3.1.2.

NOTE: To run the 'Remote' BITE program (i.e., the transceiver test) after completing the 'Local' test, do not depress the 'END' key. Instead, depress the 'REM - BITE' key, **2** , and refer to section 3.3.1.2.

If any of the modules (LRUs) are faulty, the BITE program will halt, the front panel 'FAULT' indicator **5** will light, and the operational display will display a message indicating the faulty module:

'FRONT PANEL FAULT'

'CPU FAULT'

'POWER SUPPLY FAULT'

'I/O FAULT'

'AUDIO FAULT'

In the event of a fault, proceed to Section V of this manual, concerned with fault isolation and repair.

3.3.1.2 TRANSCEIVER TEST (REMOTE BITE)

Refer again to Figure 3.3.1.1 and perform the following steps to access and execute the transceiver's BITE program from the remote control unit.

Depress the 'MORE' key, **1** , successively until the feature menu display **2** shown in Figure 3.3.1.1 appears.

Depress the 'BITE' key **3** . The message

'SEL REMOTE OR LOCAL'

will appear on the operational display, and the BITE submenu shown in Figure 3.3.1.2 will be displayed on the feature menu display.

Depress the 'REM - BITE' key **2** . The message

'REMOTE BITE IN PROG'

will appear on the operational display. When the Remote BITE program has been successfully completed, the message

'TEST COMPLETED'

will be displayed.

To return the remote control unit and transceiver to their operational states, depress the 'END' key **3** .

If the Remote BITE program detects a fault in any of the transceiver modules, the program will halt, and the operational display will display a message indicating the faulty module:

'FRONT PANEL FAULT'

'I/O FAULT'

'CPU FAULT'

'SYNTHESIZER FAULT'

'AUDIO FAULT'

'IF FAULT'

'FRONT END FAULT'

'FILTER MODULE FAULT'

'POWER AMPL FAULT'

'POWER SUPPLY FAULT'

'HI VSWR AT XXXX MHZ'

NOTE: Message displayed if Transceiver detects a High VSWR at any one of the following test frequencies 1.75, 2.75, 3.75, 5.75, 7.75, 10.75, 16.75 and 25.75 MHZ.

'HI VSWR AT MULT MHZ'

NOTE: A High VSWR was detected at two (2) or more test frequencies.

'NO TUNE AT XXXX MHZ'

NOTE: Message displayed if the Antenna Coupler fails to tune any one of the test frequencies.

'NO TUNE AT MULT MHZ'

NOTE: Coupler failed to tune at two (2) or more test frequencies.

In the event of a fault in the transceiver, the appropriate fault isolation and repair procedures should be performed. Refer to Section V of the RT-9000 Manual. The remote control unit itself can be restored to normal operation by depressing the 'END' key **3** .

3.3.2 METER FUNCTIONS

A variety of metering functions are available on the Remote Control Unit's front panel operation display at **1** in Figure 3.3.2.1 for both the receive and transmit conditions.

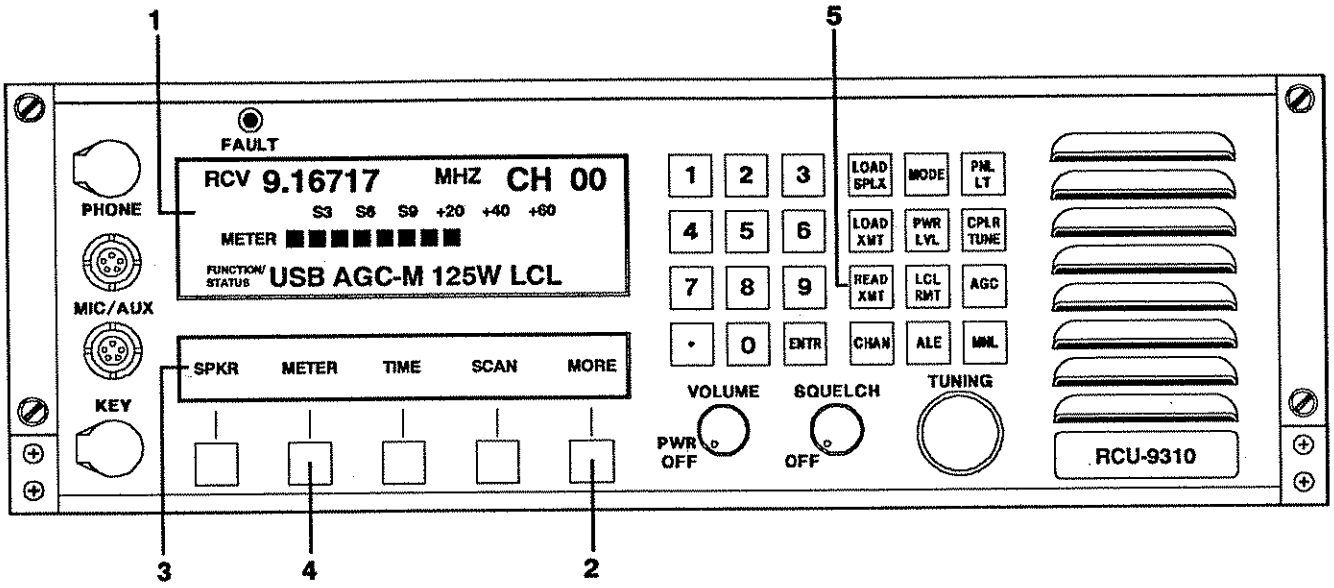

Figure 3.3.2.1 RCU-9310 Operational Displays.

The available Meter functions are:

IN RECEIVE:

'S MTR' - Signal Strength Meter (shown in Figure 3.3.2.1).
'LINE' - 600 OHM Line Audio Output.

IN TRANSMIT:

'FWD -' - Forward RF Power Output.
'RFLD -' - Reflected RF Power.
'LINE' - 600 OHM Line Audio Input.
'ALC' - ALC Voltage.

To make the desired selections depress the feature menu select key 'MORE' **2** until the feature menu display appears as indicated by **3** .

Depress the 'METER' function key **4** and the feature menu display will appear as shown in Figure 3.3.2.2.

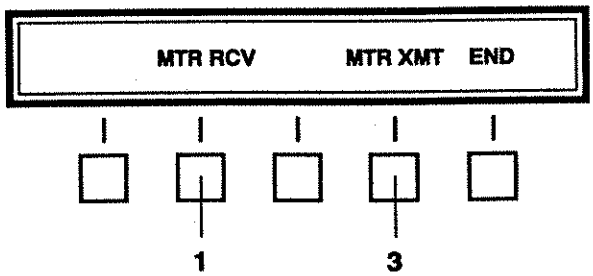

Figure 3.3.2.2 RCU-9310 Feature Select Display.

Depress the 'MTR RCV' (Meter Receive) selector Key **1** and the feature menu display will now appear as shown in Figure 3.3.2.3.

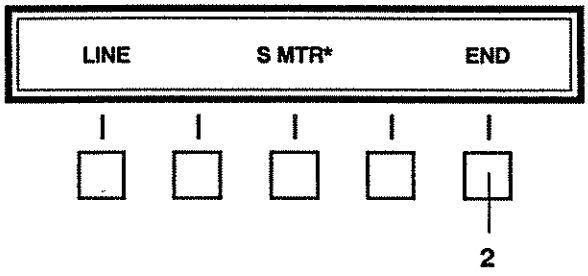

Figure 3.3.2.3 RCU-9310 Feature Menu Select Display.

To select the desired receive meter display simply depress the feature key below the desired display.

NOTE: The asterisk (*) will move to the function selected indicating that it has been enabled.

Once the selection has been made, depress the menu selector key 'END' **2** and the feature menu display will revert to that shown in Figure 3.3.2.2.

The receive metering will now read at **1** in Figure 3.3.2.1.

To select the transmit meter display, depress the 'MTR XMT' (Meter Transmit) selector key **3** and the feature menu display will now appear as shown in Figure 3.3.2.4.

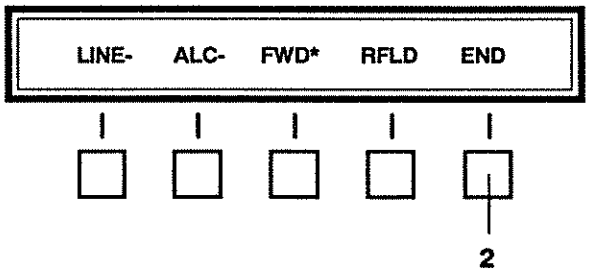

Figure 3.3.2.4 RCU-9310 Feature Menu Select Display.

To select the desired transmit meter display, depress the feature key below the desired readout.

NOTE: The asterisk (*) will move to the entry selected indicating that it will be metered.

Once the meter selection has been made, depress the menu selector key 'END' **2** and the feature menu display

will revert to that shown in Figure 3.3.2.2. The transmit metering will now read correctly at **1** in Figure 3.3.2.1 with the depression of the 'READ XMT' function key **5** .

Depress the 'END' **2** key to restore the feature menu display to its normal display.

3.3.3 SPEAKER ON/OFF FUNCTION

The speaker is normally enabled in the RCU-9310 by default. To disable the speaker:

Depress the feature menu 'MORE' key, **1** , successively until the display indicated in Figure 3.3.3 is shown.

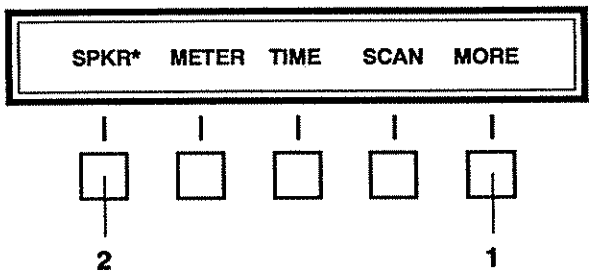

Figure 3.3.3 RCU-9310 Feature Menu Select Display.

Depress the 'SPKR' key, **2** , and the speaker will be disabled and the asterisk (*), enable function, will disappear.

NOTE: This function controls the local speaker only. Therefore, it has no control over speaker in the remote.

NOTE: When the RCU-9310 is turned off, or primary power is interrupted, the speaker will automatically revert to the 'ON' condition when power is restored.

3.3.4 'MHz' or 'kHz' FREQUENCY DISPLAY

The primary frequency display can be indicated in Megahertz(MHz) or Kilohertz(kHz).

Depressing the feature menu select key MORE, **1** , successively until the feature menu display is as shown in Figure 3.3.4.

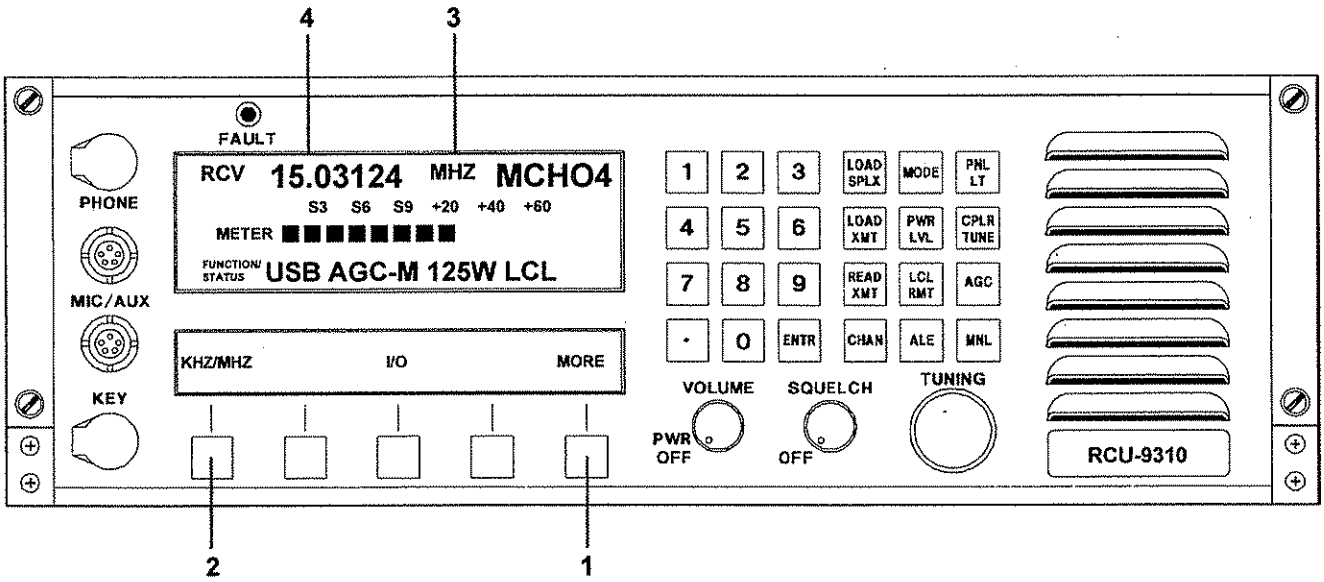

Figure 3.3.4 RCU-9310 Operating Controls.

Depressing the 'kHz/MHz' feature key **2** will toggle the operational display at **3** to read either 'MHz' or 'kHz'. Note that the decimal point **4** will move three digits to the right of the place shown in Figure 3.3.4 when the operational display reads in 'kHz'.

3.3.5 TIME DISPLAY

If a clock has not been installed, depression of the 'TIME' feature key will produce the message "NO CLOCK INSTALLED" on the operational display. For equipment supplied with the clock option, the time function may be accessed by successively depressing the feature menu select key 'MORE' **1** until the feature menu display shown in Figure 3.3.5.1 appears in the display.

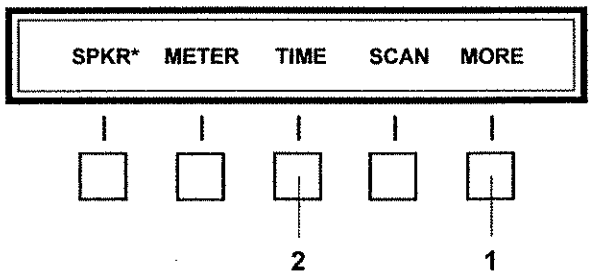

Figure 3.3.5.1 Feature Menu Display.

NOTE: The clock option in the RCU-9310 Remote Control Unit is strictly a "local" function and totally independent of the clock in the RT-9000 Transceiver. The two functions do not communicate in any way; i.e., the remote control unit cannot access the transceiver's clock, or vice versa.

Depress 'TIME' select key **2** . Feature menu display will now appear as shown in Figure 3.3.5.2.

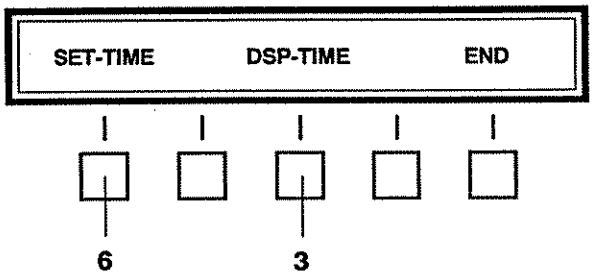

Figure 3.3.5.2 Time Display and Time Set Display.

Time can now be displayed by depressing the feature select key 'DSP-TIME'(Display Time) **3** . The presentation will appear as shown in Figure 3.3.5.3.

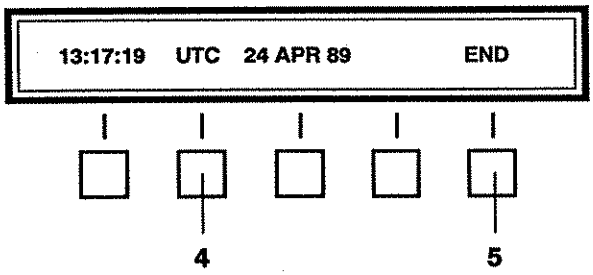

Figure 3.3.5.3 Time Display.

Other times such as 'EST'(Eastern Standard Time) and 'PST'(Pacific Standard Time) may be viewed by successive depressions of the selector key **4** .

Depression of the 'END' key **5** will cause the feature menu display to revert to that shown in Figure 3.3.5.2.

TO SET TIME:

Depress the 'SET-TIME' key **6** . The feature menu display will appear as shown in Figure 3.3.5.4.

NOTE: Use UTC Time ONLY.

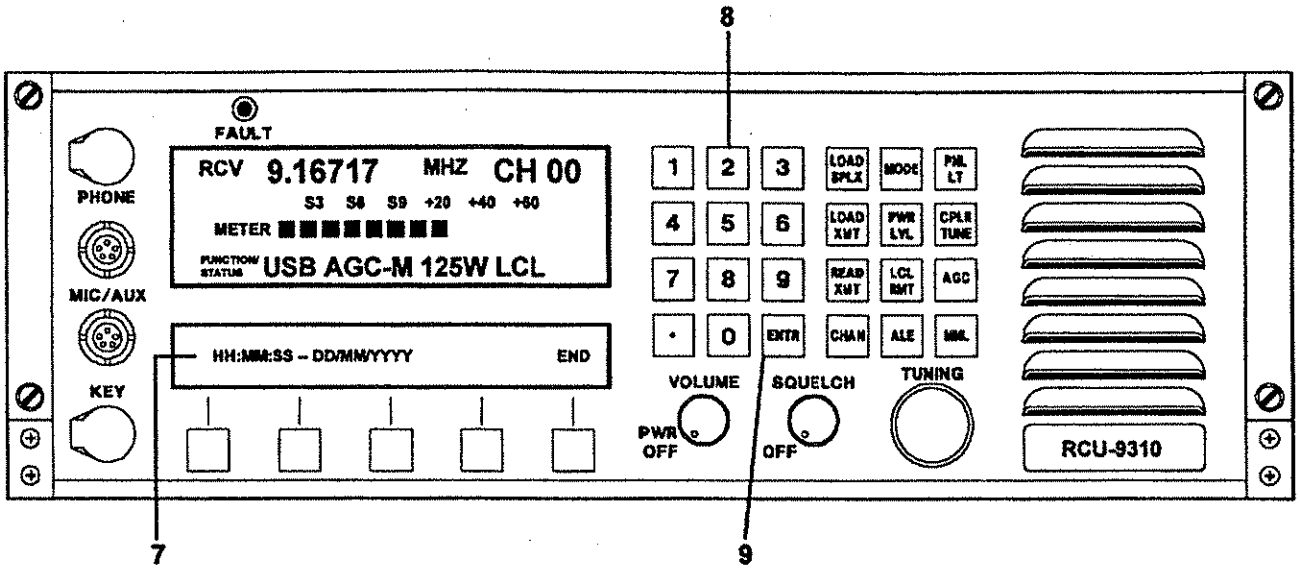

Figure 3.3.5.4 'Set-Time' Display.

7 The first 'H'(Hour) will flash, indicating the space in the display for numeric keyboard entry. As the first number is entered on the numeric keypad, **8** , the second space will flash, and so on, until numbers have been entered for hours, minutes, seconds—day, month, and year.

When the last digit has been entered, depress the 'ENTER' key **9** to set the clock. The display will revert to that shown in Figure 3.3.5.2. Depress the 'DSP-TIME' key **3** to display the time.

3.3.6 'I/O' PORT SET UP

This section deals with conditioning the RCU-9310 to automatically handle information, in the correct format, for external modems and/or remote lines. External connections to two I/O ports are provided by a single DB-9 male connector **1** on the rear panel of the remote control unit as shown in Figure 3.3.6.1.

NOTE: Although both ports use the same connector, the wiring may be split to accommodate different routing for each port.

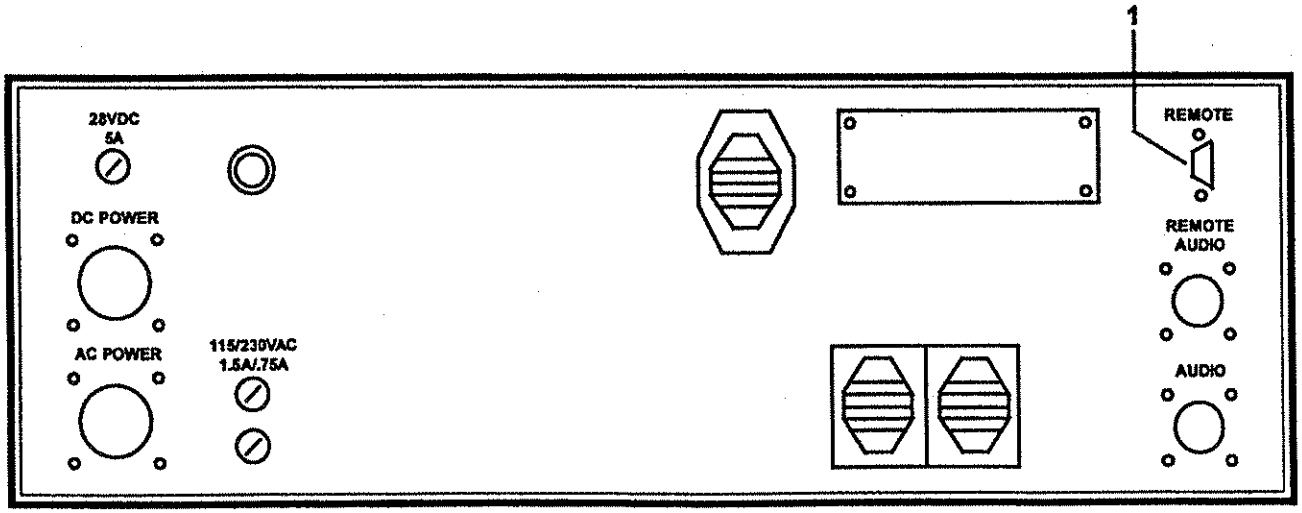

Figure 3.3.6.1 RCU-9310 I/O Port Connector.

9000 SERIES EQUIPMENT REMOTE CONTROL
I/O REMOTE CONTROL SELECTION

INTERIM OPERATING INSTRUCTIONS FOR I/O ACCESS USING CODE KEY

The following instructions apply to software revisions: RT-9000: C24, R-9200: B10, T-9400: A16, RCU-9310: A12, RCU-9310R: A2, RCU-9310T: A2 and all subsequent revisions.

Important Operating Notes:

(a) An * (asterisk) associated with a function indicates that the function is enabled.

(b) If no * (asterisk) appears on the Port A Conditioning Feature Menu Display the I/O is disabled.

(c) Pressing **END** will exit the I/O selection menu.

I/O PORT SET-UP

Refer to section 3.3.8 I/O Port Set-Up page revision 7/29/97 for Feature Menu Display details.

To access and configure the 9000 series equipment I/O PORT SET-UP accomplish the following steps:

1.0 Depress the **I/O** key. Located in position 2 on the Feature Menu Display.

2.0 **ENTER CODE NUMBER** will be displayed at position number 3 on the Feature Menu Display.

3.0 Enter code: **2580**, using the Frequency/Channel Entry Keypad. Note: The Operational LCD display will display a square block on the right-hand side of the Operational Display for each keypress entry.

4.0 The Operational display FUNCTION /STATUS field will now display the selected Mode, AGC , RF power and remote control status.

5.0 The Feature Display will change to: **RS232 RS422 RS485 MODEM END.**

6.0 Select the desired remote control mode, Example **RS232**. Note: The companion remote control device and remote control interconnecting cable must be configured for the selected operating mode and bit-per-second rate before proper operation can be achieved.

7.0 Upon selecting the operating mode the Feature Menu will change to: **BAUD ADDRESS END**.

8.0 Select the desired **BAUD** rate in bit-per-second.

9.0 Select the desired equipment **ADDRESS.**

10.0 Depress **END.**

11.0 **ENTER CODE NUMBER** will be displayed in the Feature Menu.

12.0 Enter code: **2580**, using the Frequency/Channel Entry Keypad. Note: The Operational LCD display will display a square block on the right-hand side of the Operational Display for each keypress entry.

13.0 The Feature Display will change to: **RS232 RS422 RS485 MODEM END**

14.0 Depress **END**.

14.0 The radio will return to normal operation.

Port B is a dedicated, RS232, 9600-baud port, to be used for future specific predetermined operations.

Port A provides the interface between the remote control unit and its companion transceiver. The interface characteristics are selectable and are determined by the requirements of the external device (in this case, the RT-9000). Once the desired format is determined, port A may be conditioned by performing the following procedure.

NOTE: The following procedure configures I/O Port A in the RCU-9310 Remote Control Unit only; the corresponding port in the companion transceiver must be configured locally, at the transceiver control panel. The port configurations must be identical in order for the remote control unit to operate in conjunction with the transceiver.

Depress the feature menu display select key 'MORE', **1** , successively until the display shown in Figure 3.3.6.2 appears.

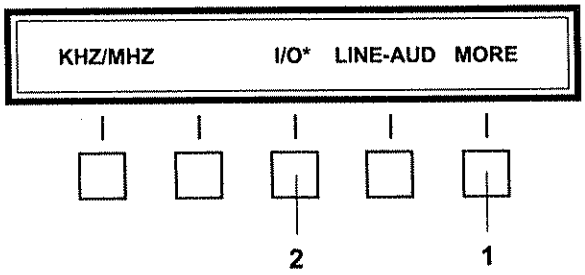

Figure 3.3.6.2 Feature Menu Display of Port 'A' Selection Menu.

Depress the 'I/O'(Input/Output) select key **2** . The feature menu display will now read as shown in Figure 3.3.6.3.

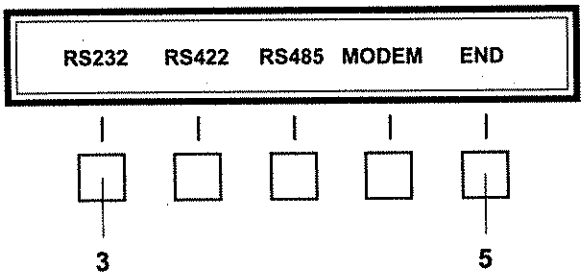

Figure 3.3.6.3 Port 'A' Conditioning Menu.

To select 'RS232', 'RS422', 'RS485', or 'MODEM' (FSK Tones), depress the feature select key immediately below the format desired. In this case, key **3** to select 'RS232'. The feature menu display will now appear as shown in Figure 3.3.6.4 and display the established baud rate.

NOTE: These menu conditioning may be selected, but only the conditioning that the system is hardwired for will allow operation between RCU-9310 and RT-9000(A).

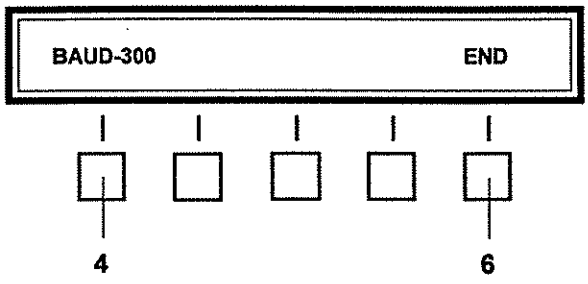

Figure 3.3.6.4 Baud Rate Display.

If a different baud rate is desired than that shown in the display in Figure 3.3.6.4, depress the feature select key **4** and other choices will appear on the display as shown in Figure 3.3.6.5.

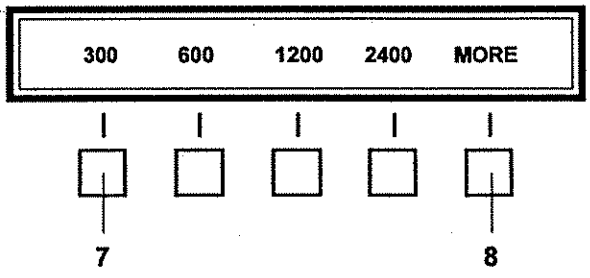

Figure 3.3.6.5 Baud Rate Selection Menu 1.

Depress the feature select Key **8** . The feature menu display will advance to that shown in Figure 3.3.6.6.

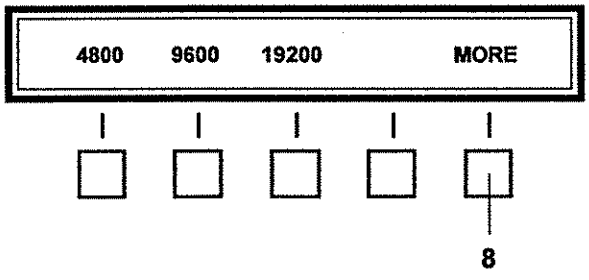

Figure 3.3.6.6 Baud Rate Selection Menu 2.

Depress the selector key immediately below the desired baud rate in Figure 3.3.6.5 or 3.3.6.6. By depressing 'MORE' Key **8** the menu will toggle between 1 and 2. If '300' Key **7** is depressed the feature menu display will immediately revert to that shown in Figure 3.3.6.4 and the newly selected baud rate will be displayed.

Depression of 'END' Key **6** in Figure 3.3.6.4 will cause the display to revert to that shown in Figure 3.3.6.3. Depression of 'END' Key **5** in Figure 3.3.6.3 will condition the I/O and feature menu display will revert to that shown in Figure 3.3.6.2.

NOTE: RS-232 operation maximum baud rate 4800
RS-422 operation maximum baud rate 19200
RS-485 operation maximum baud rate 19200
'MODEM (FSK TONES) operation baud rate is defaulted to 300.

3.3.7 ADDRESS AND SOFTWARE REVISION LEVEL

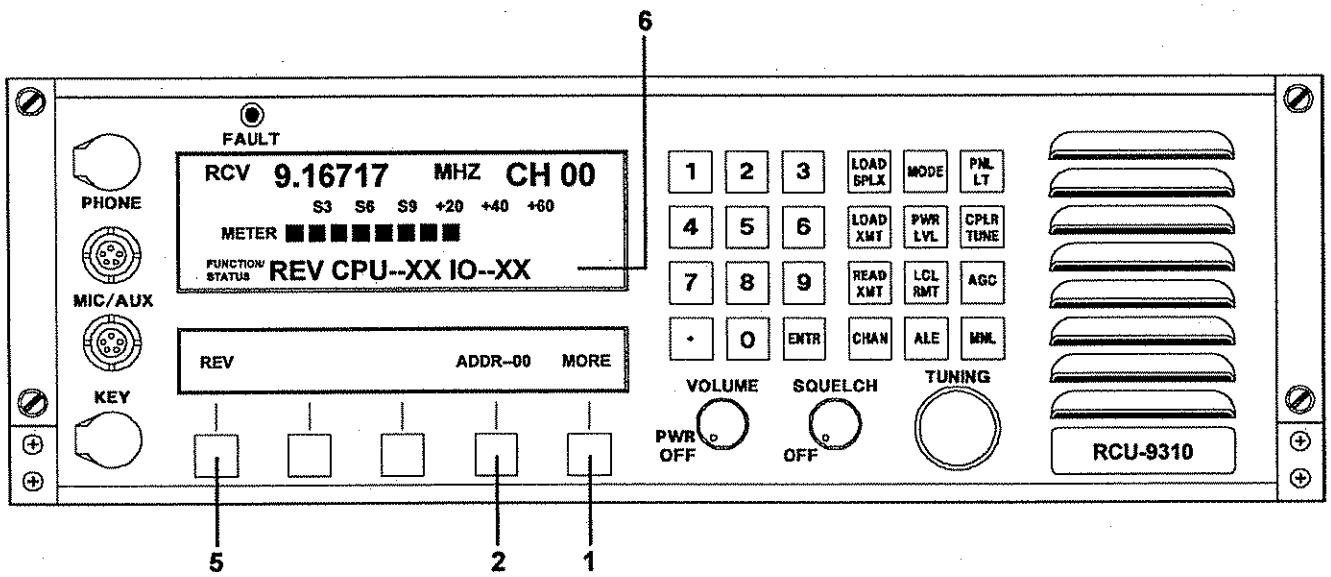

Figure 3.3.7.1 Address and Revision Level Display.

The RCU-9310 is capable of addressing and controlling more than one (1) RT-9000 Transceiver over a RS-485 control line and a switchable audio matrix. Only one RT-9000 may be addressed and controlled at a time. Thus each RT-9000 must have an address assigned I.E. 00 through 99 and the address of the RT-9000 you wish to control entered at the RCU-9310 and the remote audio switched to the applicable RT-9000.

To enter address into the RCU-9310 depress the 'MORE' Key **1** until feature menu display appears as indicated in Figure 3.3.7.1. Depress the ADDR-XX Key **2**. The feature menu display will display as shown in Figure 3.3.7.2.

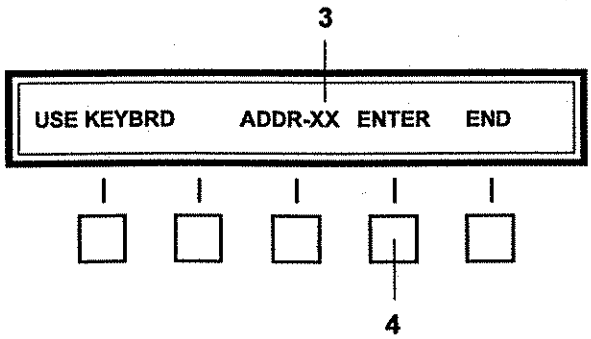

Figure 3.3.7.2 Feature Menu for Selection of Address.

Use keyboard to select the address, this will appear at **3** in the feature menu display. Depress the 'ENTER' Key **4** to establish new address, feature menu display will revert to Figure 3.3.7.1 displaying new address.

NOTE: When only one (1) RCU-9310 is controlling one (1) RT-9000 both units should be address 00.

With feature menu display as displayed in Figure 3.3.7.1 depress the 'REV' Key **5** and the operational display will display at **6** REV CPU--XX IO--XX. Depress 'REV' Key **5** again or 'MORE' Key **1** to return to normal operation. This is a test of the software installed in EPROM'S. If either CPU or IO display blanks at XX, turn unit off and back on to reset CPU and check REV again. If either is still blank the appropriate EPROM is faulty.

3.3.8 'CW' KEY AND FILTER OPTIONS

In order to invoke access to the proper feature menu display, the RCU-9310 must first be put in the 'CW' mode of operation. This may be done by successively depressing the 'MODE' key until the 'CW' mode is displayed on the operational display. Once the 'CW' mode has been selected, the feature menu display will appear as shown in Figure 3.3.8.

NOTE: This only changes on the RCU-9310. Does not affect the RT-9000.

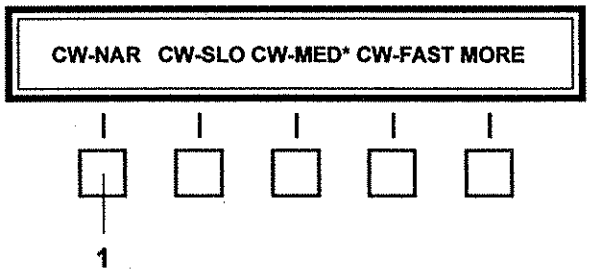

Figure 3.3.8 Feature Menu Display for Selection of 'CW' Options.

The RCU-9310 has been equipped with an audio narrow band CW filter. If this function is desired, it may be employed by depressing the 'CW-NAR'(CW-Narrow) select key **1** . An asterisk (*) will appear next to the 'CW-NAR' function to indicate that the filter is introduced into the equipment for the CW mode of operation.

NOTE: If this filter is chosen, it will automatically be utilized for <u>all</u> CW operations, independent of other menu selections.

The CW key break time is normally set at 'CW-MED'(CW-Medium) when the equipment is shipped from the factory. This setting will accommodate normal keying speeds of 10 to 20 wpm (words per minute). If a setting other than this is desired, it may be selected by depressing the key immediately below 'CW-SLO'(CW-Slow) for under 10 wpm or 'CW-FAST' for over 20 wpm. Note that the asterisk (*) on the display shown in the figure will move next to the speed selected.

3.3.9 LINE AUDIO SELECTION

The 'AUDIO' connector on the RCU-9310 rear panel provides two sets of 600-OHM input and output lines (Set 'A' and Set 'B') to permit the use of two external audio devices with the remote control unit. Through this function, a remote external device may provide Transmit Audio to the transceiver or process Receive Audio from the transceiver.

NOTE: Line Audio selection is strictly a local function that connects one of two external audio devices to the remote control unit. It has no control of, or interaction with, the transceiver's 'Line Audio' function.

Selection of either external device may be made from the front panel by depressing the feature menu display 'MORE' key, **1** , until the display shown in Figure 3.3.9.1 appears.

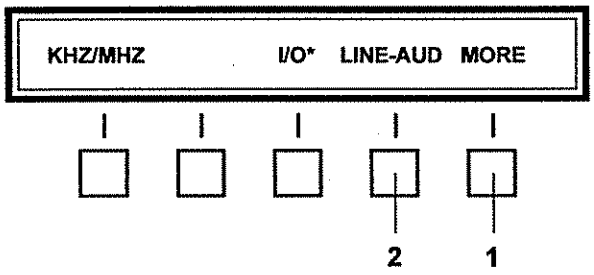

Figure 3.3.9.1 RCU-9310 Feature Menu Select Display.

Depress the 'LINE-AUD' key, **2** , to display the audio selection menu shown in Figure 3.3.9.2.

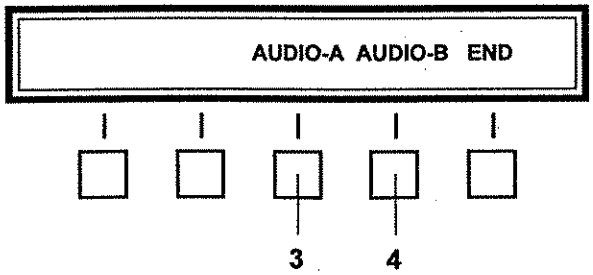

Figure 3.3.9.2 Line Audio Selection Menu Display.

Depressing feature key **3** will connect the device on line A to the remote control unit. Similarly, depressing feature key **4** will connect the device on line B to the remote control unit. The asterisk (*) will appear next to the line that has been selected.

NOTE: Only one external device may be selected at a time. If only one device is to be used in the system, it should be connected to line 'A'.

3.4 ADVANCED OPERATIONS

This section addresses those features and functions that are specialized or invoke some of the unique features of the RCU-9310 Remote Control Unit and RT-9000 Transceiver as presented in sections 3.2 and 3.3 of this manual.

3.4.1 RECEIVER SCANNING

The RCU-9310 has the ability to perform a rudimentary receiver scanning function of all pre-programmed frequencies or any block of consecutive channels between "00" and "127" stored in RT-9000. Frequencies are stored in channel slots as described in Section 3.2.9 of this manual.

To scan any block of frequencies, the RCU-9310 must be in the channelized mode of operation, see Section 3.2.7. The displays will appear as shown in Figure 3.4.1.1.

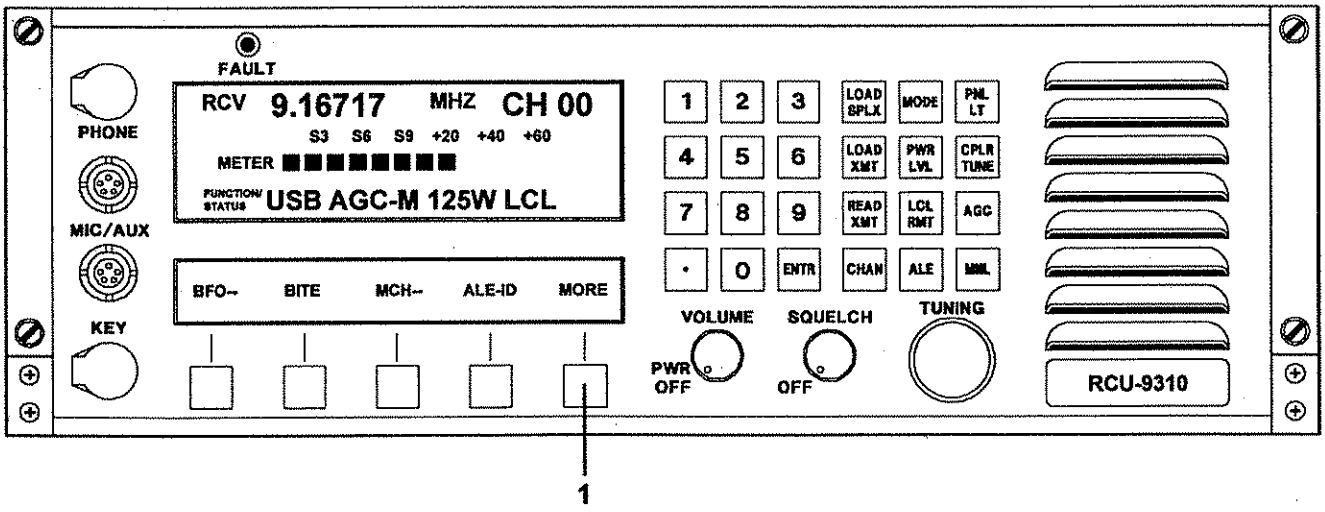

Figure 3.4.1.1 Operational Display for Channelized Mode.

Depress the feature menu display select key 'MORE' **1** successively until the feature menu display appears as shown in Figure 3.4.1.2.

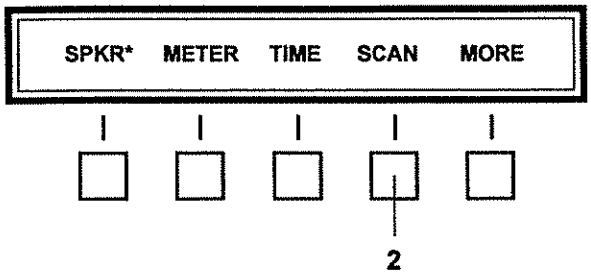

Figure 3.4.1.2 Feature Menu Display for 'SCAN' Select Key.

Depress the 'SCAN' select key **2** and the displays will appear as shown in Figure 3.4.1.3.

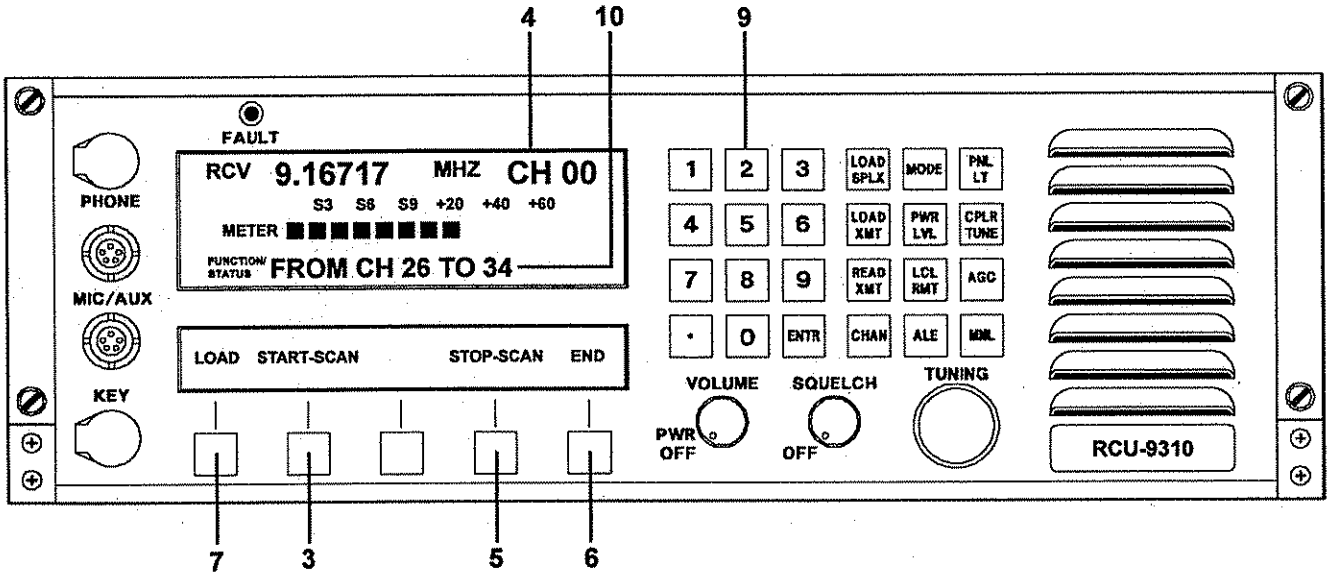

Figure 3.4.1.3 Feature Menu Display for 'SCAN' Function.

To initiate a 'SCAN' function, depress the 'START SCAN' key **3** and the channels being scanned will be shown in the operational display at **4** . To stop the scanning process, simply depress the 'STOP SCAN' key **5** , or key the RCU-9310 with MIC PTT or CW Key. To return to normal channelized operation, depress the 'END' key **6** .

NOTE: The dwell time on any given frequency has been kept to a minimum, about 2 seconds, consistent with recognizing the presence or absence of a signal in order that relatively continuous monitoring occurs. If, for some reason, longer or shorter dwell times are required, please contact Sunair for instructions on how to proceed.

To load a desired block of channels, depress the 'LOAD' key **7** . The feature menu display will appear as shown in Figure 3.4.1.4.

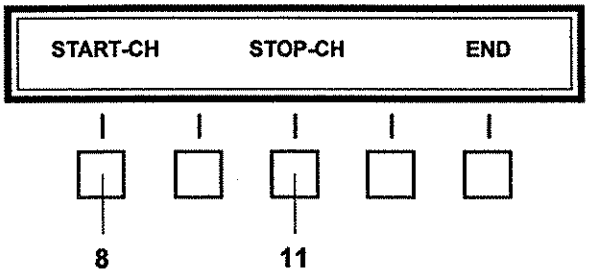

Figure 3.4.1.4 Feature Menu Display for 'SCAN LOAD' Select Key.

The operational display will briefly display the message

'USE KEYB FOR NUMBERS'

To select a new start channel, depress the 'START-CH' key **8** and enter the appropriate digits (00-127) on the numeric keypad, **9** . The newly selected start channel will be displayed on the operational display in the "FROM CH XX TO YY" message, **10** . To select a new stop channel, depress the 'STOP-CH' key **11** and enter the appropriate digits (00-127) on the numeric keypad **9** . The newly selected stop channel will be displayed in the "FROM CH XX TO YY" message **10** . To terminate the loading of a new start channel and/ or stop channel, depress the 'END' key and the feature menu display will revert to that shown on Figure 3.4.1.3.

NOTE: When selecting a start channel or stop channel, ascertain that the start channel number is lower than the stop channel number. Otherwise, the operational display will display the message,

'START MUST BE LESS'

momentarily and a new channel must be entered either for 'START CH' or 'STOP CH'.

3.4.2 AUTOMATIC LINK ESTABLISHMENT (ALE) PROGRAMMING

3.4.2.1 GENERAL

All of the control functions to perform automatic link establishment (ALE) to FED-STD 1045 interoperability requirements are contained within the RT-9000 (A) Transceiver and can be accessed and implemented from the RCU-9310 Remote Control Unit. To establish an automatic linking station, the addition to the transceiver of a Sunair ALE modem is required.

Once the system has been configured and turned on, the net operational frequencies are stored in channel slots as described in Section 3.2.9. Channel frequencies may be stored in any order; but, as a general rule,

linking time may be shortened by entering frequencies in order of most probable use.

It should be noted that channels will be utilized in ALE operation in 10 groups of 10. A group number is indicated by the first digit of the channel number; e.g.:

GROUP 0 - CH 00 to CH 09
GROUP 1 - CH 10 to CH 19
GROUP 2 - CH 20 to CH 29

and so on. If 10 or fewer frequencies are available, they would normally all be programmed in the same group (usually GROUP 0). If more than 10 frequencies are available, they can be distributed among the groups in some meaningful order. For example, 'Daytime' frequencies could be stored in GROUP 0 and 'Nighttime' frequencies in GROUP 1.

NOTE: Remember, ALE scanning will be confined to one group at a time.

NOTE: A three (3) station 'ALE' Network example:

Network ID 'SUNAIR'

Radio #1		Radio #2		Radio #3	
Memory Address Slots	Call ID's Identifier	Memory Address Slots	Call ID's Identifier	Memory Address Slots	Call ID's Identifier
01	'SUN1' (Self ID)	01	'SUN1'	01	'SUN1'
02	'SUN2'	02	'SUN2' (Self ID)	02	'SUN2'
03	'SUN3'	03	'SUN3'	03	'SUN3' (Self ID)

3.4.2.2 ESTABLISHING ALE-ID's

Each radio in the network must be assigned an identifier (ID). Once assigned, the ID is stored in one of 99 available memory address slots in the system memory. Refer to Figure 3.4.2.2.1 and perform the following steps.

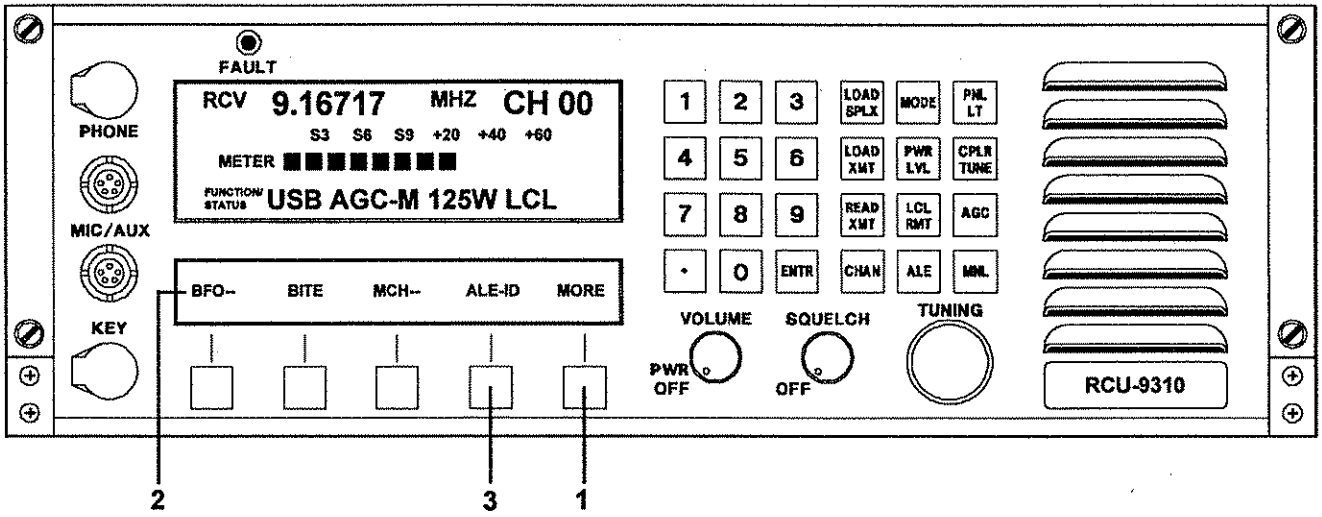

Figure 3.4.2.2.1 RCU-9310 Feature Menu Display.

Depress the Feature menu select key 'MORE' **1** successively until the feature menu display **2** reads as shown in Figure 3.4.2.2.1. Depress the 'ALE-ID' select key **3** to produce the Feature menu shown in Figure 3.4.2.2.2.

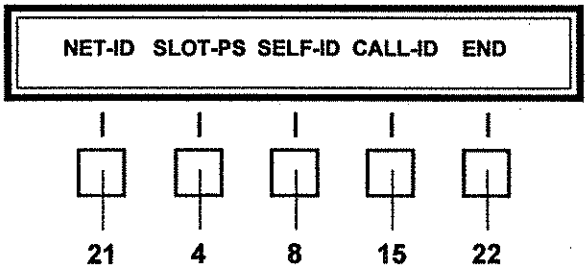

Figure 3.4.2.2.2 Feature Menu Display for 'ALE-ID' Select Key.

NOTE: The memory slot address allocated to the 'SELF ID' is established when the ID code is assigned and will remain fixed unless changed.

A. To Load Slot Position:

Depress the 'SLOT-PS' Key 4. The operational display will display the momentary message

'ENTER CODE WITH DIAL'

The displays will appear as shown in Figure 3.4.2.2.3.

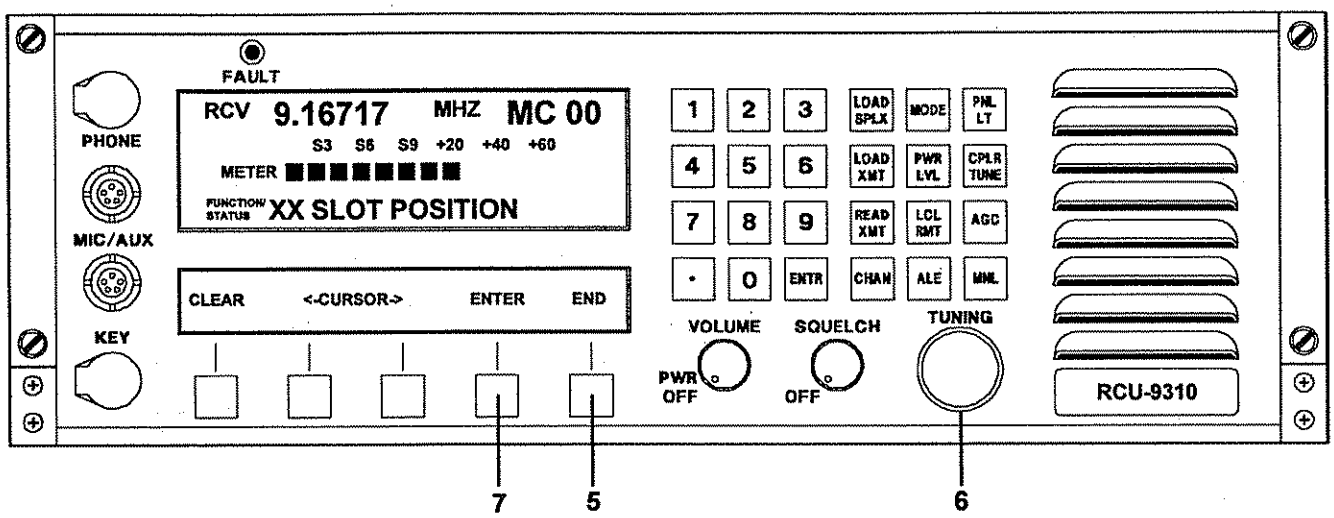

Figure 3.4.2.2.3 RCU-9310 Display for 'SLOT PS' Programming.

The operational display XX is the current 'SELF ID' memory slot address with second X flashing. If this is the proper slot position depress the 'END' key **5** and go on to Load Self ID.

If the displayed XX is to be changed, rotate 'TUNING' knob **6** clockwise to increase or counterclockwise to decrease number 01 through 99.

Once desired memory slot address is displayed, depress 'ENTER' key **7** and feature menu display will revert to Figure 3.4.2.2.2.

B. To Load Self ID:

Refer to Figure 3.4.2.2.2 and depress the 'SELF ID' key **8** . The operational display will display the momentary message

'ENTER CODE WITH DIAL.'

The displays will now appear as shown in Figure 3.4.2.2.4.

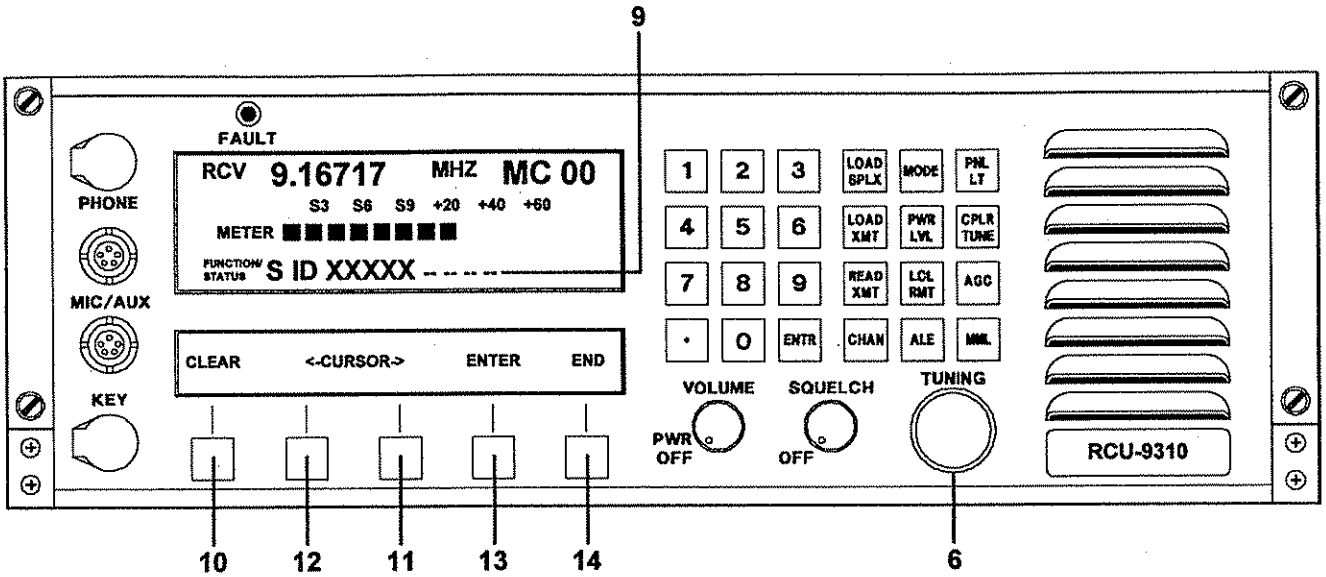

Figure 3.4.2.2.4 RCU-9310 Display for 'SELF ID' Programming.

In the operational display, at **9** , a sequence of fifteen dashes (--) or alphanumeric characters, representing the ID code, should appear after 'S ID'. Any combination of up to fifteen alphanumeric characters may be used.

If there is information other than dashes (--) in these positions, depressing the 'CLEAR' feature select key **10** will remove it.

The first position, or dash (--), will flash to indicate the specific position where a selected character is to be entered. If the first character is satisfactory as is, depressing the right arrow (—>) key **11** will move the flashing cursor one position. Alternately, depressing the left arrow (<—) key **12** will move the cursor one position to the left.

As each position is specified, characters '0' through '9' and 'A' through 'Z' can be selected by turning the 'TUNING' knob **6** either clockwise or counterclockwise. Once the desired character appears in position, depress the right arrow key (—>), **11** . The flashing cursor will move to the next position and the procedure for character selection is repeated until the desired 'S ID' is established.

Once all characters have been selected, depressing the 'ENTER' key **13** will store the 'S ID' and cause the feature menu display to revert to that shown in Figure 3.4.2.2.2. The operational display will return to normal status. Depressing the 'END' key **14** will also restore the displays to their previous status, but will not store the 'S ID' code.

C. To Load Call ID's:

Refer again to Figure 3.4.2.2.2 and depress the 'CALL ID' select key **15** . The momentary message

'ENTER CODE WITH DIAL'

will appear on the operational display. The displays will appear as shown in Figure 3.4.2.2.5.

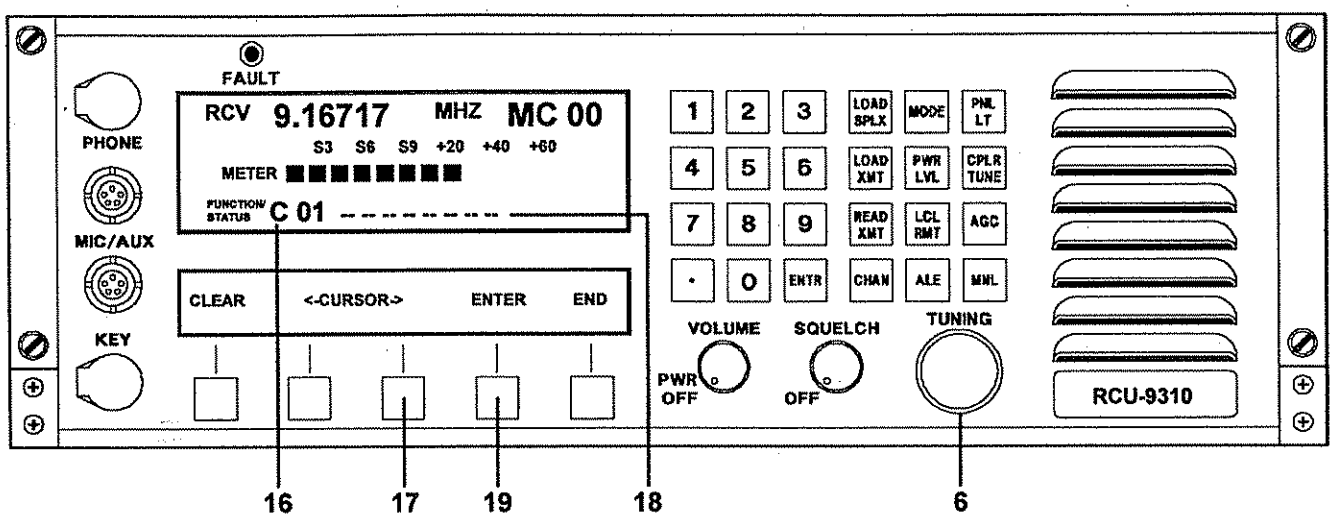

Figure 3.4.2.2.5 Feature Menu Display for 'CALL ID' Select Key.

The system's memory can store 99 station 'CALL ID' numbers (01-99). In the Operational display at **16** , a flashing cursor will indicate each of these numbered addresses, or slots (01-99), as the 'TUNING' knob **6** is rotated either clockwise or counterclockwise. Once an address (slot) has been selected -- by stopping the rotation of the tuning knob on the desired number and depressing the right arrow (—>) key, **17** -- the flashing cursor will move to the first position in a fifteen-character field **18** .

NOTE: The memory address previously selected for 'SELF ID' will, when selected display at **18** .

'THIS IS OUR SELF ID'

The 'CALL ID' number is entered in the same manner as the 'SELF ID' number, as described previously in this section of the manual. (Again, any grouping of up to fifteen alphanumeric characters may be used). When the station 'CALL ID' appears correctly in the display at **18** , depress the 'ENTER' key **19** to store the ID in memory. The next station slot number is then selected by the 'TUNING' control **6** and presented in the display at **16** whereupon the procedure for 'CALL ID' entry is repeated.

When all 'CALL IDs' have been stored in memory, depress the 'END' key **20** . The feature menu display will revert to the display shown in Figure 3.4.2.2.2.

D. To Load Network ID:

Depress the 'NET ID' Key **21** in Figure 3.4.2.2.2, the menu will change to Figure 3..4.2.2.4 and message:

'ENTER CODE WITH DIAL'

Will appear on the Operational display at **9** followed by the appearance of:

'NID ----------'

A sequence of fifteen dashes (----) or alphanumeric characters, representing the 'NID' code should appear after 'NID'. Any combinations of up to fifteen alphanumeric characters may be used.

If there is information other than dashes (----) in these positions, depressing the 'CLEAR' feature select key **10** will clear the positions allowing ease of new entry.

The first position, or dash (-) will flash to indicate the specific position where a selected character is to be entered. If the first character is satisfactory as is, depressing the right arrow (—>) key **11** will move the flashing cursor one position. Alternately, depressing the left arrow (<—) key **12** will move the cursor one position to the left.

As each position is specified, characters '0' through '9' and 'A' through 'Z' may be selected by turning the 'TUNING' knob **6** either clockwise or counterclockwise. Once the desired character appears in position, depress the right arrow key (—>) **11** . The flashing cursor will move to the next position and the procedure for character selection is repeated until the desired 'NID' is selected.

Once all characters have been selected, depressing the 'ENTER' Key **13** will store the 'NID' and cause the Feature display to revert to that shown in Figure 3.4.2.2.2. The feature menu display will return to normal status. Depressing the 'END' key **14** will restore the displays to their previous status, but will not store the 'NID' code. In Figure 3.4.2.2.2 depressing the 'END' key **22** will cause the displays to revert to those shown in Figure 3.4.2.2.1. The system is now ready for ALE use.

3.4.3 AUTOMATIC LINK ESTABLISHMENT (ALE) OPERATION

Once the system has been programmed for operation in the ALE mode, as described in Section 3.4.2 of this manual, operation within an established network is rather simple.

With the equipment on, depress the '*'/'ALE' key **1** as shown in Figure 3.4.3.1.

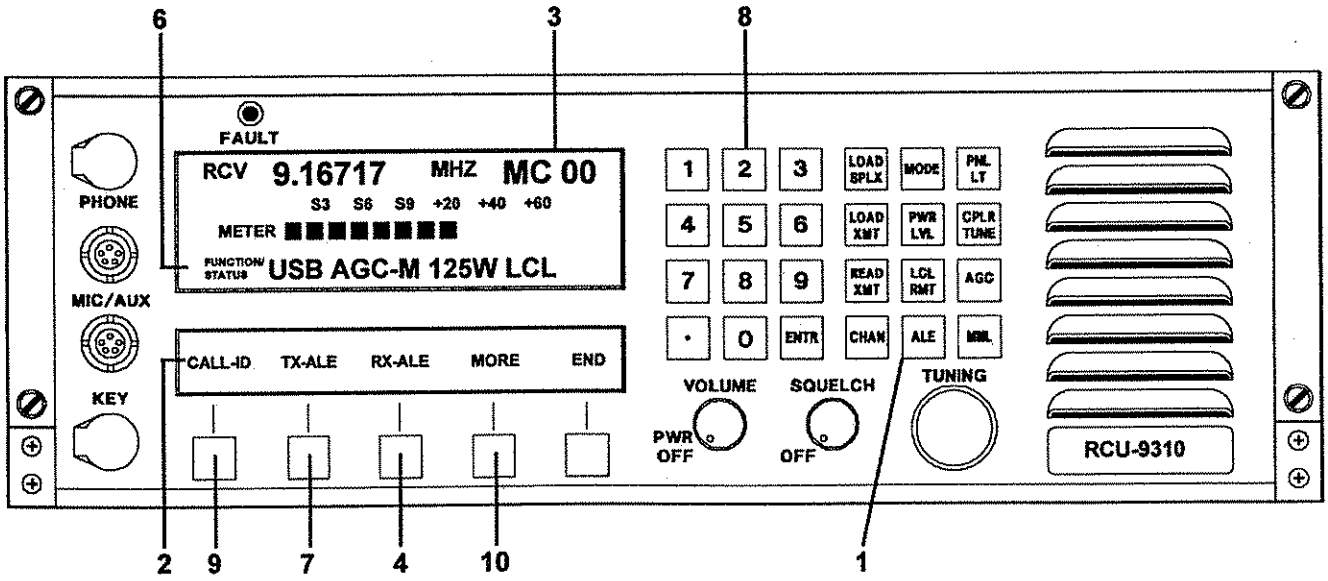

Figure 3.4.3.1 Operational Display for 'ALE' Function.

NOTE: If an ALE modem is not connected to the transceiver or is not powered up, the message 'NO ALE INSTALLED' will be displayed on the operational display when the '*'/'ALE' key is depressed.

The feature menu display **2** will appear as shown in the figure. As discussed in Section 3.4.2, the preprogrammed channels are divided into groups of 10, starting with group 0 and ending with group 9. The group number is indicated by the first digit following 'MC' at **3** .

If the display indicates that you are in the proper group, depress the 'RX-ALE' key **4** to have the system receiver begin scanning.

If the display indicates you are not in the desired group, depress the 'MORE' key **10** and the feature menu display will change to that shown in Figure 3.4.3.2.

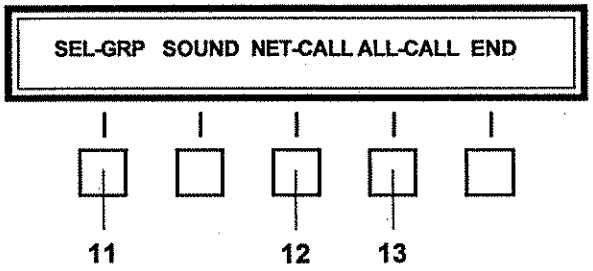

Figure 3.4.3.2 ALE Calling Menu.

Depressing the 'SEL-GRP' key, **11** , will result in the feature menu display shown in Figure 3.4.3.3.

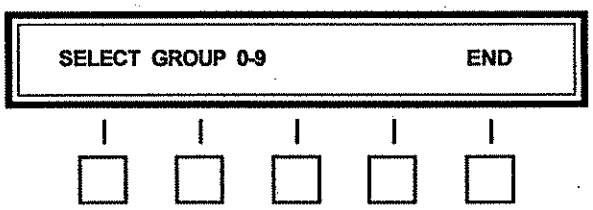

Figure 3.4.3.3 Feature Menu Display for 'Select Group'.

Select the proper group by depressing the appropriate number on the numeric keypad **8** . The selected group number will appear at **3** and the feature menu display **2** will revert to that shown in Figure 3.4.3.1. Depressing the 'RX-ALE' key **4** will begin the scan of the selected preprogrammed group.

NOTE: If the selected group has not been preprogrammed, the message 'GROUP NOT SET UP' will be displayed on the operational display.

NOTE: The message 'PLEASE WAIT' will appear on the operational display while the necessary communications are taking place.

The system is now functional within the ALE network and will automatically respond to an incoming call and take whatever steps are necessary to establish a link.

In this mode, the operational display **6** will be blanked out, except for the message: 'ALE RECEIVE.'

NOTE: If an ALE modem is installed but not operational, the message 'ALE NOT RESPONDING' will be displayed when the 'RX-ALE' key is depressed.

To initiate a call to another network station, depress the 'CALL-ID' (identification number of station to be called) key **9** as shown in Figure 3.4.3.1.

NOTE: In 'REC ALE' cannot go to 'CALL-ID' **2** or 'MORE' **10** without depressing 'END' **15** then 'ALE' **1** again to get back into menu in Figure 3.4.3.1.

Both displays will change to the format shown in Figure 3.4.3.4.

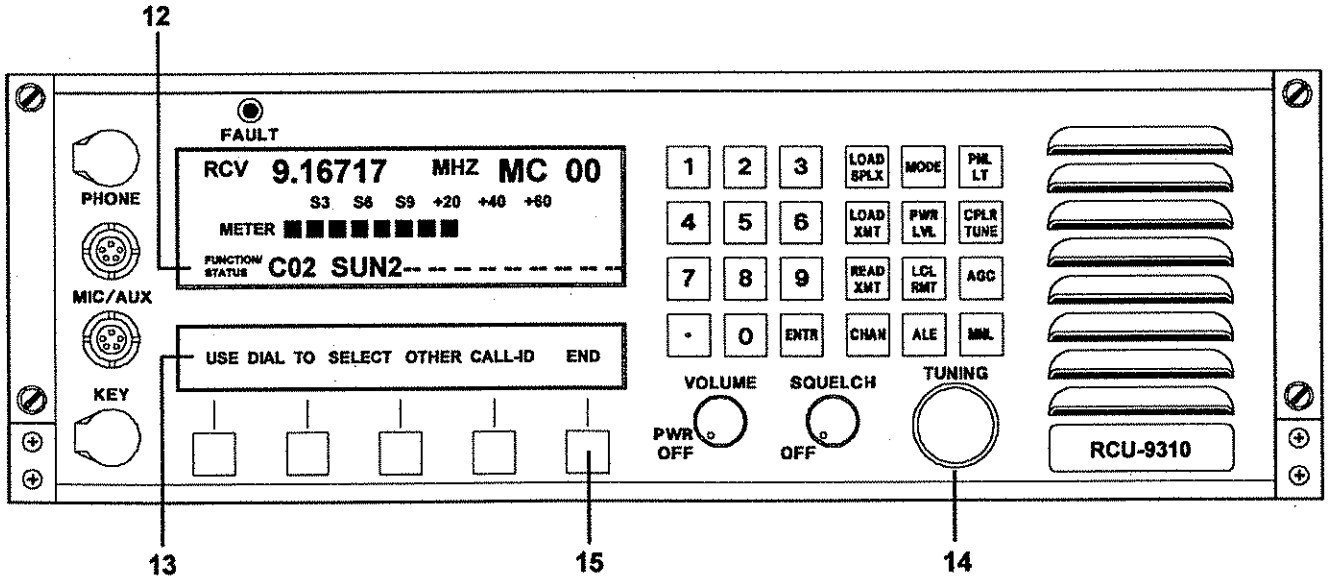

Figure 3.4.3.4 Operational Display for 'CALL-ID' Selection.

The station to be called -- in this case, station number 2, ID number SUN2 -- will appear in the operational display **12** . The message

'USE DIAL TO SELECT OTHER CALL ID'

is displayed in the feature menu display **13** .

As the 'TUNING' dial, **14** , is rotated, each of the stations and its call ID will appear in the operational display **12** . When the desired station appears in the display, depress the 'END' key **15** and the display will revert to that shown in Figure 3.4.3.1. Depressing the 'TX-ALE' (Transmit ALE) key **7** will initiate a call to the selected station on the frequencies within the selected group. During the calling process the operational display will indicate the frequency the station is being called on for the duration of the call (about 3 seconds each channel), and the ID of the station being called as shown in Figure 3.4.3.5 example.

TO SUN2

Figure 3.4.3.5 Operational Display of the Station Being Called.

Once a link has been established, all scanning will cease and the message as shown in Figure 3.4.3.6 example

LK SUN2 H

Figure 3.4.3.6 Operational Display of Link with Station Being Called.

The frequency used for the connection appears as frequency and channel. The operational displays as shown in example Figure 3.4.3.6. SUN2 is station linking back and far right alphanumeric character is the Link Quality Analysis value (LQA). The following is the RT-9000/ALE modem Link Quality Analysis (LQA) to Signal to Noise plus Audio Distortion (SINAD) conversion:

Displayed Value	dB SINAD	Displayed Value	dB SINAD
1	1	G	16
2	2	H	17
3	3	I	18
4	4	J	19
5	5	K	20
6	6	L	21
7	7	M	22
8	8	N	23
9	9	O	24
A	10	P	25
B	11	Q	26
C	12	R	27
D	13	S	28
E	14	T	29
F	15	U	30

At the called station, once a link has been established, all scanning will cease (Note: If called station is unmanned and no Link Terminate is received, the station will remain for approximately 2 hours in this Linked condition) and the message as shown in Figure 3.4.3.7 example.

LK SUN1 J

Figure 3.4.3.7 Operational Display on Called Station after a Link.

If the 'TX-ALE' scanning transmitter has attempted to link with the called station twice on each frequency and is unable to complete a link, transmit scanning will cease and the message

'TX-SCAN TERMINATED'

will appear on the operational display. At this point, you can:

a) revert to a receive scan and try to link at another time (the called station may be busy or propagation may be unfavorable); or
b) initiate the 'TX-ALE' process again.

3.4.4 SOUNDING

The technique of sounding (i.e., broadcasting to other stations in the network) is employed to facilitate ALE operation from memory of existing path conditions between stations and thereby speed the linking process by ordering linking attempts in sequence of probability. It should be noted that this process is not required for contact with other stations employing the SUNAIR ALE Modem, since Link Quality Analysis (LQA) exchanges are always performed as part of the linking process and retained in memory for 45 minutes.

To initiate a 'sound' to another station, it is first necessary to place the system in the 'ALE' mode by depressing the '*'/'ALE' key **1** as shown in Figure 3.4.3.1. Depressing the 'MORE' key (**10** in the same figure) will produce the feature menu display shown in Figure 3.4.4.1.

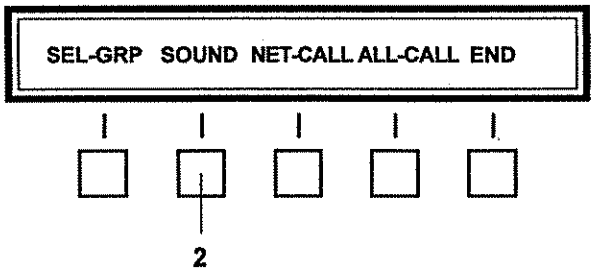

Figure 3.4.4.1 ALE Calling Menu.

Depressing the 'SOUND' key, **2** , will produce the menu shown in Figure 3.4.4.2.

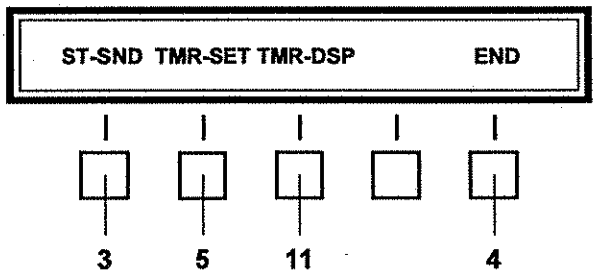

Figure 3.4.4.2 Sounding Menu.

Depressing the 'ST-SND' (Start Sound) key **3**, will initiate the sounding on all frequencies in the established channel group. See example Figure 3.4.4.3. The Operational Display will step through all frequencies displaying 'XMT', Frequency, Channel and 'SOUNDING'.

SOUNDING

Figure 3.4.4.3 Operational Display at Sounding Station.

At the conclusion of the sounding, the operational display will momentarily display 'TX-SCAN TERMINATED' then revert to normal display. The menu may now be changed by depressing the 'END' key **4** causing menu to revert to Figure 3.4.3.1 enabling system to be utilized as a normal HF Transceiver, or by depressing 'RX-ALE/TX-ALE' keys return system to ALE operations.

NOTE: From time to time, the sounding process may skip certain channels; i.e., not sound on those frequencies. This is a normal occurrence: the modem 'listens' to each channel before sounding, and will not transmit if the channel is busy.

The Operational Display at each of the Net Stations will display 'RCV', Frequency, Channel and Function/ Status will momentarily display, SO (Station Sounding) and (LQA) for each channel sounded. See example Figure 3.4.4.4.

SO SUN1 F

Figure 3.4.4.4 Operational Display on Network Stations Receiving Sound.

NOTE: Receiving Network Stations will continue on in 'REC ALE' but operational display will continue to display last sound channel until a new call is received.

Automatic sounding may be invoked if appropriate. Depressing the 'TMR-SET' (Timer Setting) key, **5** , Figure 3.4.4.2 will produce the menu shown in Figure 3.4.4.5.

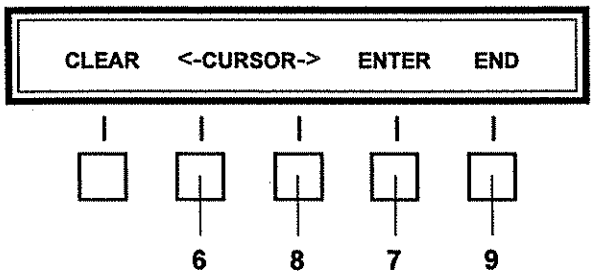

Figure 3.4.4.5 Sounding Timer Menu.

The operational display will display the instruction

'ENTER CODE WITH DIAL'

briefly, and will then display

'00 TIME INTERVAL'

Depressing the '<-- CURSOR' key, **6** , will enable changing the first time interval digit by rotating the 'TUNING' dial to select any digit between '0' and '9'. Once the desired digit appears in the first position, the selection may be stored in memory by depressing the 'ENTER' key, **7** .

Similarly, depressing the 'CURSOR -->' key, **8** , will enable the selection of the second time interval digit in the same fashion.

Once the time interval has been established, depressing the 'END' key, **9** , will return the display to that shown in Figure 3.4.4.2. Sounding signals will now be automatically transmitted on each frequency in order, unless the equipment is in the process of linking or is already linked. Once the sounding exercise has been completed, it will automatically repeat at intervals dictated by the preceding timer entry. The length of time until the next sounding occurs may be determined by depressing the 'TMR-DSP' key, **11** , where the message

'-- -- MINUTES TO SOUND'

will be displayed.

The system may be returned to normal operation by depressing the 'END' key, **4** .

NOTE: If you are in 'ALE' menu, even though you are not in Receive Scan or Transmit Scan the time interval is activated and will cause the system to sound every XX minutes. This sets timer to '00 TIME INTERVAL'.

3.4.5 NET CALL

The Sunair 'ALE' Modem is capable of calling all stations in a prearranged network for purposes of building connectivity matrix information for each network member on each viable frequency path and establishing contact with all or a number of network stations on a single channel at the same time.

It is beyond the scope of this manual to define network structures and operating disciplines.

3.4.5.1 PLACING A NET-CALL

Once net identification and slot positions have been established throughout the net (See Section 3.4.2), a net call may be placed as follows.

Depress the '*'/'ALE' key to place the radio in the 'ALE' mode. The feature menu display will automatically appear as shown in Figure 3.4.3.1. Select the desired channel by rotating 'TUNING' knob.

Depress the 'MORE' key **10** as shown in Figure 3.4.3.1. The feature menu display will change to that shown in Figure 3.4.3.2.

Depress the 'NET-CALL' key **12** .

The system will begin calling the other network stations and the message:

CALLING NET STATIONS

will appear on the operational display. At the end of the call Transmission, the radio will revert to the receive mode to listen for network responses. If heard by other stations in the network, their responses will appear on the operational display as responses below:

NR SUN2 H

Response from SUN2

NR SUN3 I

Response from SUN3

in their pre-determined time slots (approximately 2 seconds apart). All responses and associated Link Quality Analysis (LQA's) will be automatically stored in memory for future use. At the conclusion of all responses (if any), the modem will broadcast an acknowledgement, thus establishing the link. General traffic may be passed at this time. The operational display at the completion of responses display as shown below.

TX-SCAN TERMINATED

At the called Network Stations the operational displays will appear as example below.

NC SUN1 H

Upon completion of the communications, the called station modem(s) will continue to listen for channel activity for 30 seconds. If no additional traffic is heard, the called station modem(s) will automatically break the link and resume 'RX ALE' scanning.

NOTE: The system will remain in 'TX-SCAN TERMINATED' At this time, you may:

a) Depress 'NET CALL' key and re-transmit on same channel or manually select a new channel frequency and depress 'NET CALL' key again or go to Section 3.4.6 and perform an 'ALL CALL'.

b) Depress the 'END' key and the menu will revert to Figure 3.4.3.1. The system may now be utilized as a normal HF Transceiver, or by depressing either 'RX-ALE/TX-ALE' keys return system to ALE operations.

3.4.6 ALL CALL

The 'ALL CALL' protocol can be used to broadcast a message, usually AMD (Automatic Message Display) to all stations, one channel at a time. Utilization of 'AMD' requires the use of an external terminal for message composition and reception(see the ALE Modem manual for details).

The 'ALL CALL' function is invoked by depressing the '*'/'ALE' key **1** as shown in Figure 3.4.3.1, to place the unit in the 'ALE' mode. Depression of the 'MORE' key **10** will cause the feature menu display to change to that shown in Figure 3.4.3.2. Select the desired channel by rotating 'TUNING' knob **14** (see Figure 3.4.3.4) then depression of the 'ALL CALL' key **13** shown in Figure 3.4.3.2 will cause the system transmitter to key and broadcast the 'ALL CALL' (including AMD message, if any). During the period of broadcast the message:

CALLING ALL STATIONS

Will appear on the operational display. At the conclusion of the broadcast, the operational display will display the message:

TX-SCAN TERMINATED

The system will remain in 'TX-SCAN TERMINATED'. At this time, you may:

a) Depress 'ALL CALL' key and re-transmit on same channel or manually select a new channel frequency and depress 'ALL CALL' key again or depress 'NET CALL' key to perform a 'NET CALL'.

b) Depress the 'END' key and the menu will revert to Figure 3.4.3.1. The system may now be utilized as a normal HF Transceiver or by depressing either 'RX-ALE/TX ALE' keys, return the system to ALE operations.

At the called stations at the conclusion of the broadcast, the called stations will display on their operational display the message:

AC SUN1 E

These stations will remain on the channel selected to allow information to be sent. If none occurs within 30 seconds, all called stations will automatically resume receive scanning.

3.4.7 BREAK LINK COMMAND

From time to time it may be necessary to break a link with another station, particularly if it is unmanned. This may be accomplished by sending a link breaking message ('This Was') to the other station. Upon receipt of this message, the other station will abandon the link and resume scanning. This function is easily facilitated by depressing any of the following keys, 'CALL-ID', 'TX-ALE', 'RX-ALE' or 'MORE', as shown in Figure 3.4.7.1. It should be noted that pressing the 'END' key does not send the break link message.

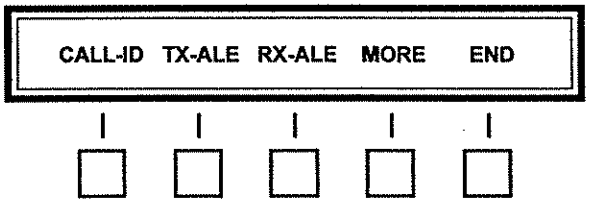

Figure 3.4.7.1 Break Link Keys.

3.4.8 OPTIONS

If the RT-9000 (A) connected to the RCU-9310 has any of the available options installed see applicable section(s) for the operation procedures.

3.4.8.1 LYNCOMPEX

If the RT-9000 (A) Transceiver has been equipped with the internal Lyncompex option, its engagement and operation can be controlled from the RCU-9310 front panel. Successive depressions of the feature menu 'MORE' key will yield the menu shown in Figure 3.4.8.1.1.

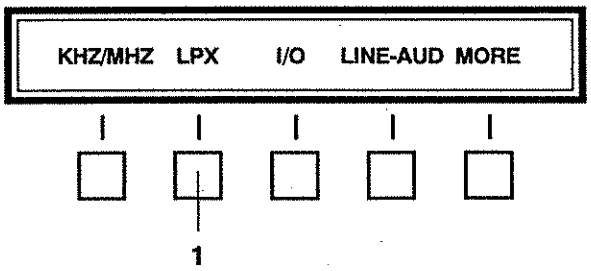

Figure 3.4.8.1.1 Lyncompex Feature Menu Display.

Depression of the 'LPX' (Lyncompex) key **1** will yield the control menu for this feature as shown in Figure 3.4.8.1.2.

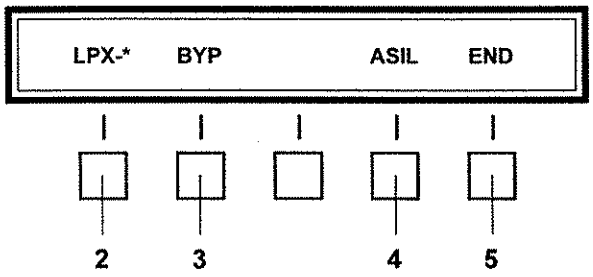

Figure 3.4.8.1.2 Lyncompex Control Feature Menu Display.

Depression of the 'LPX' key **2** will engage the internal Lyncompex feature. The (*) will appear next to 'LPX' when it is engaged. Successive depressions of this key will alternately engage and disengage Lyncompex.

Once Lyncompex has been engaged, an asterisk (*) will appear next to either the 'BYP' (Bypass) display or the 'ASIL' (Autosilence) display indicating which feature is invoked.

The 'BYP' (Bypass Feature) allows reception of normal (non-Lyncompex) signals in addition to those that have been compressed. The internal Module will recognize the existence of a synchronization signal and automatically switch in the internal Lyncompex upon detection of the signal. Normal atmospheric noise background will be heard in the speaker until a Lyncompex signal is received whereupon the receiver will become quieted. When Lyncompex is invoked All transmissions will be made in the Lyncompex format.

The 'ASIL' (autosilence) feature will keep the receiver muted until a lyncompex signal is received.

NOTE: In the 'ASIL' mode ONLY Lyncompex formatted signals will be received. Normal signals will not break the receiver quieting.

Engagement of 'BYP' or 'ASIL' is a selection made by depression of key **3** for 'BYP' or key **4** for 'ASIL'. One or the other will always be activated as long as Lyncompex is engaged.

Escape from this control menu is made by depression of the 'END' key **5** whereupon the display will revert to that shown in Figure 3.4.8.1.1.

3.4.8.2 DATA FILTER

Depress 'MODE' key and mode selected will be displayed on Operational Display. Choices are 'USB', 'LSB', 'CW', 'AM', and 'DATA' (see section 3.2.1).

3.4.8.3 RADIO SECURITY

The RT-9000 (A) and RCU-9310 can be equipped with a security feature which, when invoked, will prevent unauthorized personnel from either viewing Transceiver settings (by blanking the Operational Display), or

changing any Transceiver settings (by disabling the front panel controls).

For further information, contact Sunair.

3.4.8.4 PRE-SELECTOR

Depress 'MORE', key **1** until feature menu display is as shown in Figure 3.4.8.5.1.

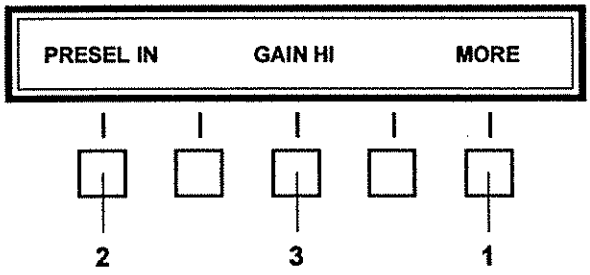

Figure 3.4.8.5.1 Feature Menu Display for Pre-selector Selection.

Depressing 'PRESEL', key **2** will toggle the feature menu display 'IN' or 'OUT' (Placing the 'Pre-selector in or out of operation). Depressing 'GAIN' key **3** will toggle the feature menu display 'HI' or 'LO' (0dB for 'HI' or -10dB for 'LO').

SECTION IV

THEORY OF OPERATION

4.1 REMOTE CONTROL UNIT-TRANSCEIVER INTERFACE AND INTERACTION

The RCU-9310 Remote Control Unit and its companion RT-9000 Transceiver interconnect and communicate by means of two I/O ports and two sets of audio lines. The I/O ports -- one each on the remote unit and transceiver -- provide the communications path for all operational, or control, data:

a) channel number and frequency information
b) mode selection and tuning commands
c) transmit and receive commands
d) automatic scan and ALE setup and activation
e) operator messages

I/O port connections are provided by the 'Remote' connector (J6) on the remote control unit's rear panel.

Receive audio input and transmit audio output are applied, respectively, to the remote unit from the transceiver and to the transceiver from the remote unit over separate pairs of audio lines. The Receive Audio Input and the Transmit Audio Output connections are provided by the 'Remote Audio' connector (J4) on the remote control unit's rear panel.

From an operational standpoint, the RCU-9310 can be viewed as a remote control panel that essentially duplicates the primary operator functions of the RT-9000 Transceiver. When the RCU-9310 assumes control of the transceiver, the transceiver's primary operator controls are inoperative. The reverse is true when the transceiver has control.

Both the RCU-9310 and the RT-9000 are software-controlled, microprocessor-based units, using similar devices and technology. The remote unit's software provides the control and interface capability for the front panel display, processes incoming and outgoing messages, and -- when in control -- generates functional commands to the transceiver.

4.2 REMOTE CONTROL UNIT

The RCU-9310 Remote Control Unit contains the circuitry to allow the remote operator to control all of the primary functions of the RT-9000 Transceiver.

The major functional assemblies of the RCU-9310 Remote Control Unit are listed below and described in the follwing paragraphs.

(1) Front Panel Assembly 3A1
(2) CPU Assembly 3A2A1
(3) Audio/Remote Audio Assembly 3A2A2/3A2A4
(4) I/O Assembly 3A2A3
(5) AC and DC Power Supplies 3A3A1/3A3A2

Figure 4.1, the overall block diagram of the RCU-9310, illustrates the functional relationship between these assemblies; schematic diagrams are included in Section V of this manual.

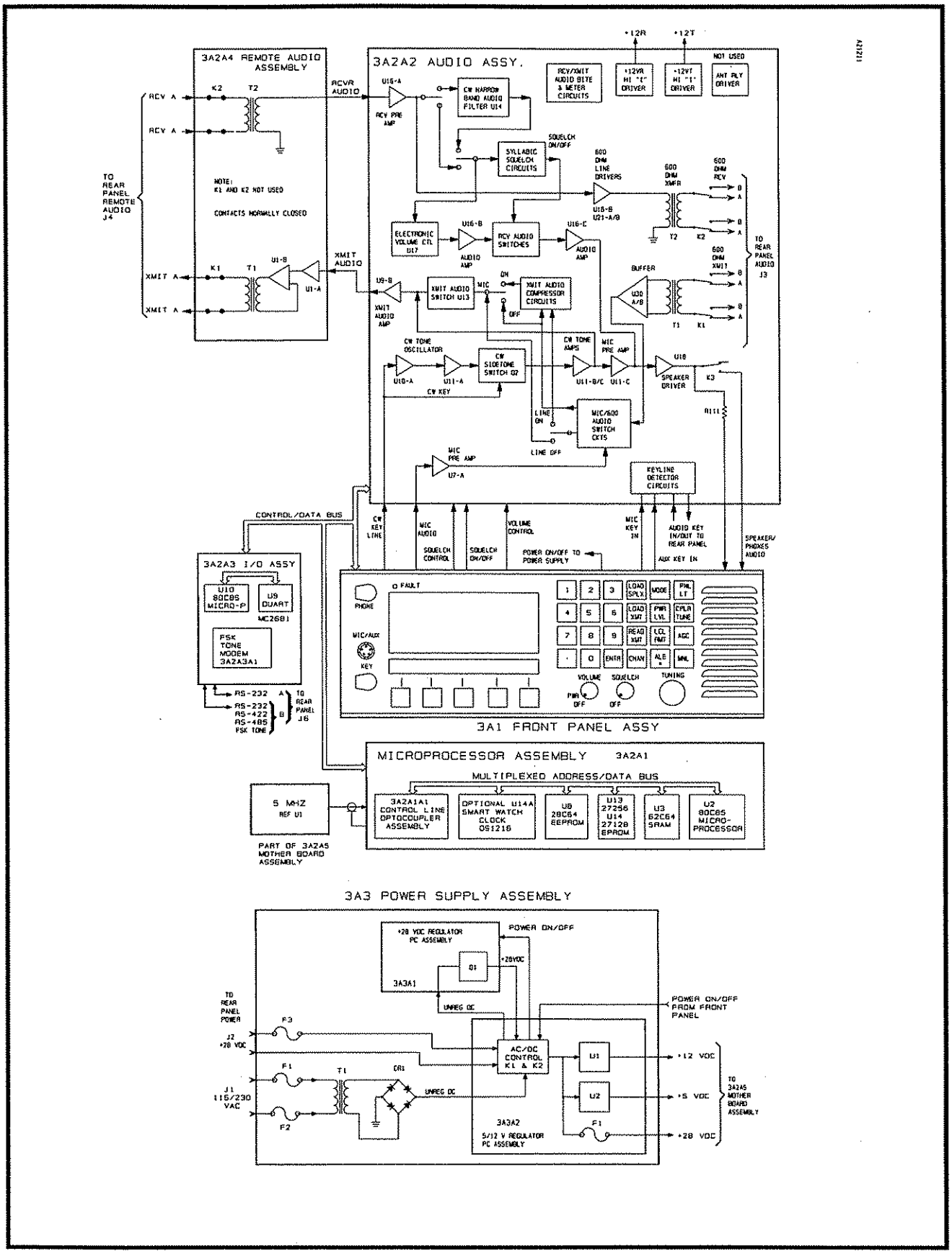

Figure 4.1 RCU-9310 Remote Control Unit Block Diagram.

4.2.1 FRONT PANEL ASSEMBLY 3A1

The front panel assembly contains the circuitry necessary to provide analog and control interfacing with the appropriate subassemblies. It also provides and accepts digital information through the control/data bus via the microprocessor assembly with the various other assemblies. A wide screen Liquid Crystal Display (LCD) indicates (Transceiver) operating status such as frequency, channel, mode, BFO, AGC release time, RF power level, and local/remote control as selected by a front panel keypad. The LCD contains a bar graph display which can selectively indicate receive signal strength, transmit forward/reflected power, and 600-ohm transmit/receive audio levels.

Built-In Test Equipment (BITE) monitors the status of the remote control unit's plug-in assemblies. In addition, the transceiver's BITE can be activated and monitored from the remote control unit front panel. Plain language messages are displayed on the LCD, providing assurance of the continuing functionality of the remote control unit or the transceiver.

Selecting the 'Local BITE' function exercises a comprehensive test routine (contained in the remote control unit's microprocessor software) that checks all plug-in subassemblies to the the Lowest Repairable Unit (LRU). If a fault is detected, the 'FAULT' Light Emitting Diode (LED) in the upper left corner of the panel will light and a message on the LCD will indicate which LRU is inoperative. Similarly, selecting the 'Remote BITE' function will activate the test routines in the transceiver's microprocessor software and the remote control unit LCD will monitor the testing the transceiver's LRU's.

A 'soft-key' menu LCD located directly below the primary display permits the selection of several enhanced functions, such as Scan, Sounding, Automatic Link Establishment (ALE), Local and Remote BITE, Time-of-Day, etc. The soft keys also provide access to meter selection, I/O port configuration, remote audio, and speaker control.

4.2.2 CPU ASSEMBLY 3A2A1

4.2.2.1 GENERAL

The CPU Assembly provides overall control of RCU-9310 functions. It enables most Front Panel controls and status indications and executes the RCU-9310's internal BITE routines. When the RCU-9310 assumes control of transceiver operations, the microprocessor provides message control and generates commands to the transceiver. These commands are decoded by the transceiver to execute the appropriate (transceiver) software routines and perform the designated function(s).

Communications between the Microprocessor Assembly and the other major functional assemblies are provided by the control/data bus.

4.2.2.2 MICROPROCESSOR U2

The 8-bit 80C85 microprocessor, U2, is the primary control for all RCU-9310 functions. It executes the instructions (software) stored in EPROM'S U13 and U14. U2 controls and communicates with the other circuits on the CPU Assembly by means of a multiplexed address/data bus.

4.2.2.3 ERASABLE PROGRAMMABLE READ-ONLY MEMORY (EPROM) U13 AND U14

The EPROM'S, U13 and U14, stores the program(s) or software executed by the microprocessor U2 to control the RCU-9310 functions.

4.2.2.4 ELECTRICALLY ERASABLE PROGRAMMABLE READ ONLY MEMORY (EEPROM) U8

Long term storage of the RCU-9310 ALE functions is handled by the non-volatile memory in U8. U8 is an 8K X 8 bit CMOS EEPROM in which each byte may be reliably written 10,000 times without degrading device operation. The data in the byte will remain valid after its last write operation for ten years with or without power applied.

4.2.2.5 STATIC RANDOM ACCESS MEMORY (SRAM) U3

The SRAM provides temporary storage that is used as a "scratch pad" by microprocessor U2 during the execution of its program with U13 and U14.

4.2.2.6 OPTIONAL SMART WATCH U14(A)

Smart Watch is an optional device that is "piggy-backed" into socket U14. It keeps track of: hundreths of seconds, seconds, minutes, hours, days of the week, days of the month, months, and years. An embedded lithium energy cell maintains time information when the equipment is turned off. The above information is available to microprocessor U2 for selective display on the Front Panel LCD as time-of-day clock.

NOTE: The Smart Watch in the remote control unit is completely independent of the Smart Watch in the transceiver.

4.2.3 OPTOCOUPLER ASSEMBLY 3A2A1A1

The Optocoupler, a subassembly that plugs onto the CPU Assembly, contains optically-coupled isolators. The Optocoupler electronically isolates the CPU's multiplexed address/data bus from the control/data bus to prevent noise transfer to/from the microprocessor (U2).

4.2.4 AUDIO/REMOTE AUDIO ASSEMBLIES 3A2A2/3A2A4

The Audio/Remote Audio Assemblies process the Remote Receive Audio input signal from the transceiver to drive the front panel speaker, headphones, and to provide two selectable 600-ohm audio outputs to external modems.

Audio input from a microphone, CW key, or selected external device is processed by the Audio/Remote Audio Assemblies to produce an amplified 600 ohm Transmit Audio output signal that is applied to the transceiver over the transmit audio lines.

After converting the receive 600 ohm audio to single ended output in the Remote Audio Assembly, the Receive Audio signal is amplified and routed to the 600-ohm line drivers to provide a balanced 600-ohm output to the connected external device ('A' or 'B', as determined by the 'Line Audio' selection described in Section 3.3.9). The amplified input signal can be electronically switched through a CW Narrowband Audio Filter or bypassed-switched to the Syllabic Squelch and Electronic Volume Control circuits. The output of the Electronic Volume Control is amplified and switched (controlled by a designed-in Mute function or Squelch ON/OFF) and routed to the Speaker Driver. The output is dropped through R111 and routed to the front panel for headphone audio. Full power audio is routed through an energized relay (K3) to the front panel speaker.

NOTE: When headphones are plugged into the front panel, relay K3 is de-energized, disabling the audio to the speaker.

The Squelch circuit is a true syllabic type that operates on voice characteristics and rejects other types of received audio, such as noise, data, etc. The Receive Audio input is sampled in the Syllabic Squelch circuit and -- if it has voice characteristics -- turns on the Receive Audio switch and passes through to the Speaker Driver. The Syllabic Squelch circuit is designed to remain inactive (i.e., audio unsquelched) during voice poises or short fades, minimizing the effects of nuisance interruptions.

NOTE: This is a function in the RCU-9310 and does not put the remote transceiver into squelch operation.

During Transmit operation, input to the Audio Assembly originates from one of three sources:

a) Microphone,
b) 600-ohm balanced lines, or
c) CW key.

The microphone input signal from the front panel is routed to the Audio Assembly where it is amplified and electronically switched to the Microphone/600-ohm Audio Switch circuits. This microphone output level is controlled by an internal adjustment. The output may be fed through the Transmit Audio Compressor circuits, or switched to bypass them. The microphone audio is then amplified, switched to the Transmit Audio Amplifier, and applied to a line driver on the Remote Audio Assembly to provide a 600-ohm Transmit Audio signal to the Transceiver.

The 600-ohm balanced audio from external input level is controlled by an internal adjustment. This signal is buffered and electronically switched through the Microphone/600-ohm Audio Switch circuits. This audio signal can also be internally switched to pass through, or bypass, the Transmit Audio Compressor circuits. The 600-ohm audio signal then follows the same path as the microphone signal.

Keying the CW key enables the CW Sidetone Switch. The CW tone is buffered and coupled to the Transmit Audio Amplifier. A second buffer and internal level control provides sidetone to the Speaker Driver.

4.2.5 I/O ASSEMBLY 3A2A3

The I/O Assembly contains two independent I/O ports, designated 'A' and 'B'. Port B is an RS-232, 9600-baud port that is dedicated to be used for future specific predetermined operations. Port A provides the control interface between the remote control unit and its companion transceiver. This port is configurable from the control panel for RS-232, RS-422, or RS-485 formats at speeds of 300, 600, 1200, 2400, 4800, 9600, 19200 baud or FSK tones at 300 baud only.

NOTE: Port A may be used for communications over telephone lines with the FSK Tone Modem (3A2A3A1) and optional PC Assemblies Phone Line Select (3A2A6) and Phone Interface (3A3A4).

I/O Port functions are implemented by a Dual Universal Asynchronous Receiver/Transmitter (DUART) circuit (U9) under control of the I/O Assembly's microprocessor (U10). The I/O Assembly microprocessor executes special instructions (software contained in EPROM U20) in response to messages from the transceiver or commands from the Front Panel or Microprocessor Assembly.

The organization of the I/O Assembly hardware and software is such that both ports can be active simultaneously.

4.2.6 POWER SUPPLY ASSEMBLIES 3A3, 3A3A1, and 3A3A2

The RCU-9310 operates from either a +26 VDC or 120/220 VAC power source. When both power sources are connected, the RCU-9310 operates from the AC line input, using the +26 VDC input as a backup power source. The supply will sense AC line reductions or failure and automatically switch to the backup voltage source. When AC line returns, the unit will automatically switch back to AC line power.

The AC power supply assembly (3A3) produces unregulated DC that is regulated to +28 VDC in PC assembly 3A3A1. This +28 VDC is routed to PC assembly 3A3A2 where the +28 VDC is fuse (3A3A2 F1) protected before being routed to the circuitry in the RCU-9310. The +28 VDC is also sent thru R1 and R2 to 3A3A2 U1 to produce the +12 VDC regulated output routed to RCU-9310 circuitry and to 3A3A2 U2 producing the +5 VDC regulated output for the RCU-9310 circuitry.

SECTION V

FAULT ISOLATION/MAINTENANCE AND REPAIR

5.1 GENERAL

This section provides the procedures for Fault Isolation, maintenance and repair to the Lowest Repairable Unit (LRU) level.

5.2 DISASSEMBLY

Disassembly should be only to the extent necessary to accomplish the repair or replacement of the defective LRU. Procedures for the disassembly of major modules and assemblies are given in the following paragraph.

5.2.1 TOP OR BOTTOM COVER REMOVAL

Refer to Figure 5.2.1.1

a) Remove the three screws at the rear of the cover.

b) Pull the cover up and back from the front panel.

5.3 TEST SET UP

5.3.1 PRELIMINARY

a) Connect RCU-9310 to AC or DC power and turn ON.

WARNING: For personal safety and to prevent damage to voltage sensitive components in the remote control unit, always turn OFF the RCU-9310 whenever reseating printed circuit cards (PC), LRU'S and when replacing fuses.

5.4 BITE

5.4.1 PRELIMINARY

The BITE of the RCU-9310 provides immediate LRU faults. The Surveillance BITE is controlled by the microprocessor on CPU Assembly 3A2A1. It checks the operational status of the LRU's with the exception of the +28 V Regulator 3A3A1. This LRU has a self-surveillance BITE non-dependent upon CPU Assembly 3A2A1. The front panel "LCD" will display a plain language "FAULT MESSAGE", the "FAULT" Red LED will illuminate on the front panel (See Figure 5.4.1.1 and on the faulty LRU (see Figure 5.4.1.3)). The RCU-9310 Remote Control Unit can be tested independently, with or without a transceiver connected. With RCU-9310 connected to selected input power turn ON remote unit and refer to figure 5.4.1.1 and perform the following steps to access the BITE menu.

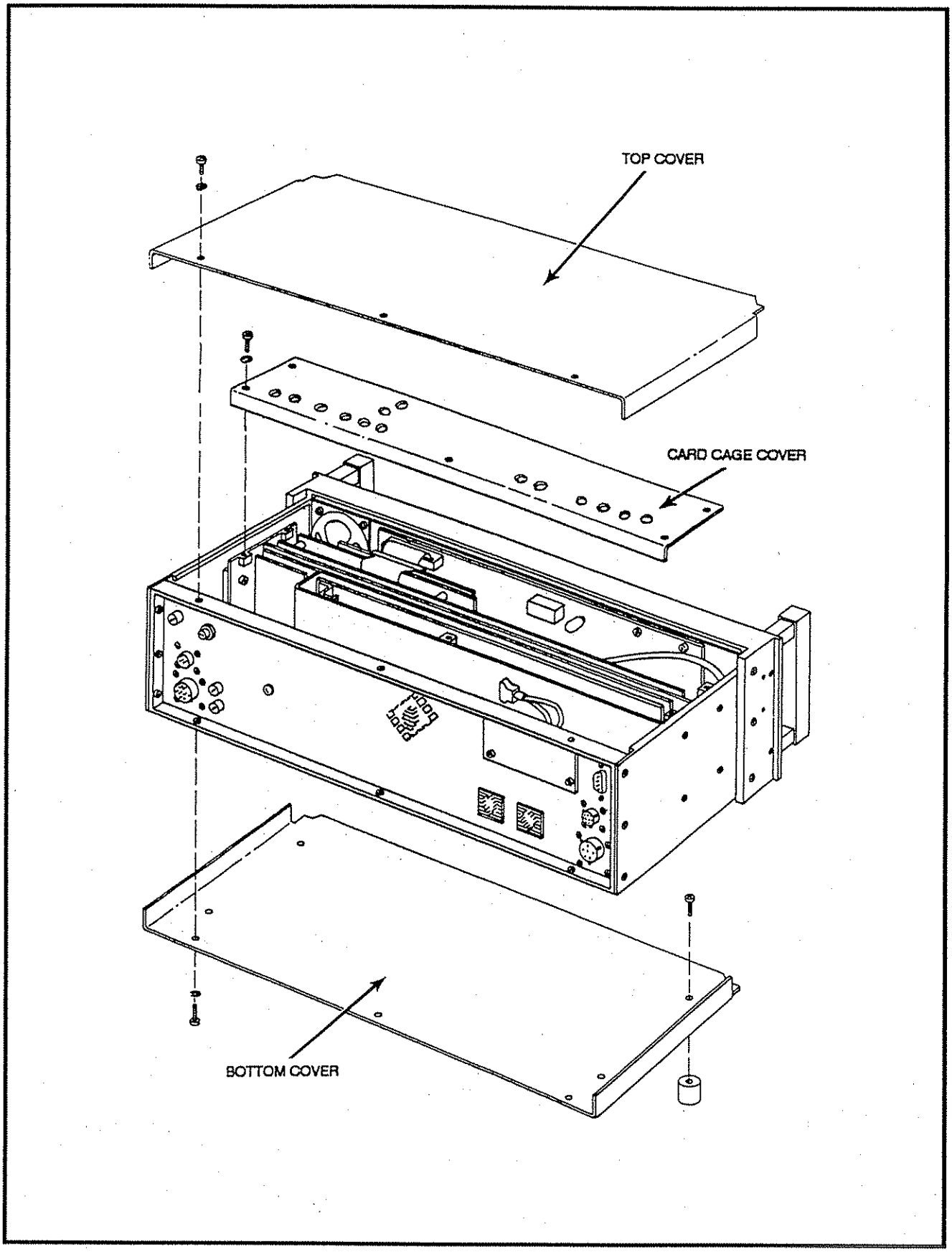

Figure 5.2.1.1 Top/Bottom and Card Cage Covers Removal.

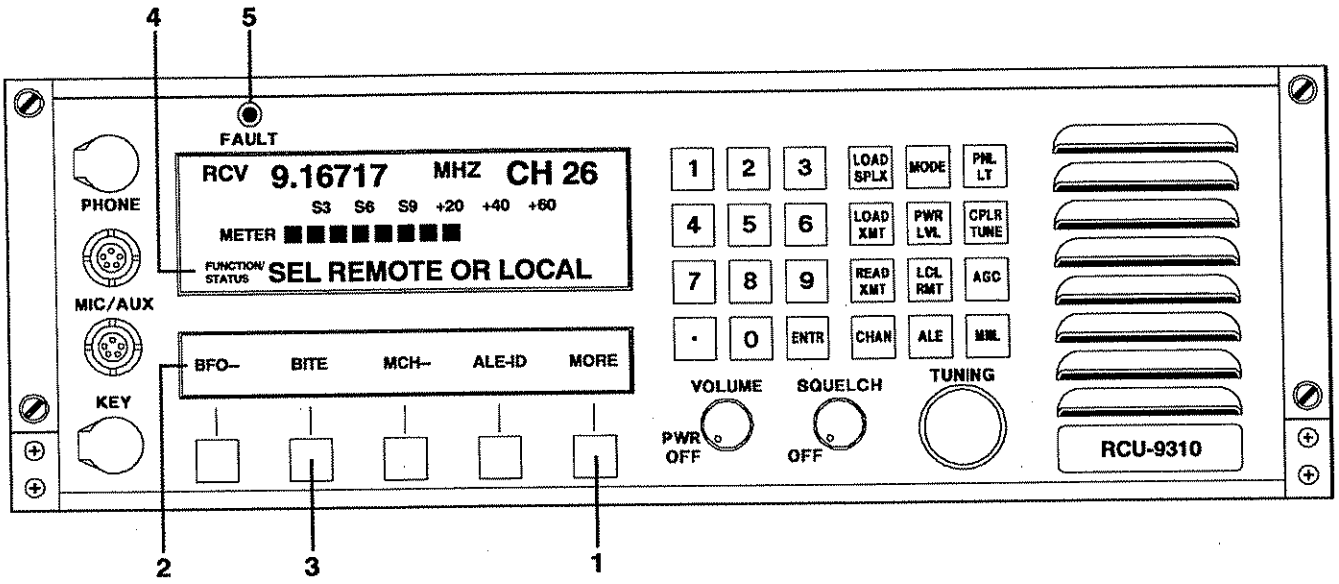

Figure 5.4.1.1 RCU-9310 Feature Menu, BITE Selection.

Depress the 'MORE' key **1** successively until the feature menu **2** shown in Figure 5.4.1.2 appears.

Depress the 'BITE' key **3** . The message:

'SEL REMOTE OR LOCAL'

will appear on the status display screen **4** , and the BITE submenu shown in Figure 5.4.1.2 will be displayed on the 'Feature' screen.

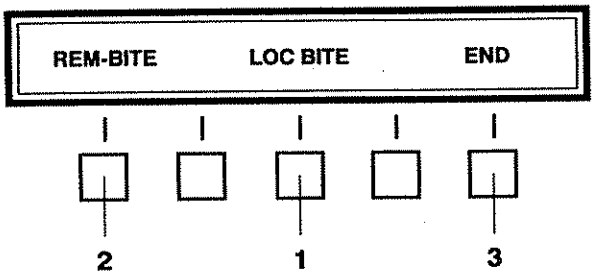

Figure 5.4.1.2 RCU-9310 BITE Submenu.

Depress the 'LOC BITE' key **1** . The RCU-9310 will initiate a self-test routine and will display messages and/or results on the status screen. The initial message will be:

'BITE IN PROGRESS'

As each modules tested, a corresponding message will appear briefly on the screen in the following order:

'FRONT PANEL O.K.'

'CPU O.K.'

'POWER SUPPLY O.K.'

'I/O O.K.'

1000 Hz Audio Tone heard in speaker at this point.

'AUDIO O.K.'

If any of the modules (LRUs) are faulty, the BITE program will halt, the front panel 'FAULT' indicator **5** will light, and the status screen will display a message indicating the faulty module:

'FRONT PANEL FAULT'

'CPU FAULT'

'POWER SUPPLY FAULT'

'I/O FAULT'

'AUDIO FAULT'

5.4.2 COMMON MODULES

NOTE: Refer to Figures 5.2.1.1, 5.4.2.1 and 5.4.2.2 for module cover removal and assembly locations.

5.4.2.1 FRONT PANEL FAULT

This is an indication of a failure on the Front Panel PC Board Assembly 3A1A1.

a) Turn RCU-9310 OFF and remove Front Panel Module 3A1. See Figure 5.4.2.2 on the following page.

b) Remove and replace Front Panel PC Board Assembly 3A1A1. See Figure 5.4.2.2.

c) Reinstall Front Panel Module 3A1. Turn RCU-9310 ON.

d) Repeat "BITE TEST". Upon completion of successful test, return RCU-9310 to operational status and return failed 3A1A1 PC to factory for repair.

e) If in step d) above, test fails the Front Panel test again, turn OFF RCU-9310 and remove 3A1 Module; replace with original 3A1A1 PC Assembly. Return the failed 3A1 Module to factory for repair.

5.4.2.2 CPU FAULT

This is an indication of a failure on the PC Assembly CPU 3A2A1. Check position of DIP Switch S1. (See Figures 5.8.4 and 5.7.3.1).

a) Turn the RCU-9310 OFF and remove and replace PC Assembly 3A2A1. See Figures 5.4.2.1 thru 5.4.2.4.

b) Turn ON RCU-9310 and repeat "BITE TEST". Upon completion of a successful test, return RCU-9310 to operational status.

c) Return failed PC Assembly 3A2A1 to factory for repair.

5.4.2.3 I/O FAULT

This is an indication of a failure on PC Assembly I/O 3A2A3.

a) Turn the RCU-9310 OFF and remove and replace PC Assembly 3A2A3. See Figures 5.4.2.1 thru 5.4.2.4.

b) Turn ON RCU-9310 and repeat "BITE TEST". Upon completion of a successful test return RCU-9310 to operational status.

c) Return failed PC Assembly 3A2A3 to factory for repair.

5.4.2.4 AUDIO FAULT

This is an indication of a failure on the Audio PC Board Assembly 3A2A2. Check DIP Switch S1. See Figure 5.8.6.

a) Turn RCU-9310 OFF and remove and replace 3A2A2. See Figure 5.4.2.1.

b) Turn RCU-9310 ON. Repeat "BITE TEST". Upon completion of successful test, return RCU-9310 to operational status. Return failed 3A2A2 to factory for repair.

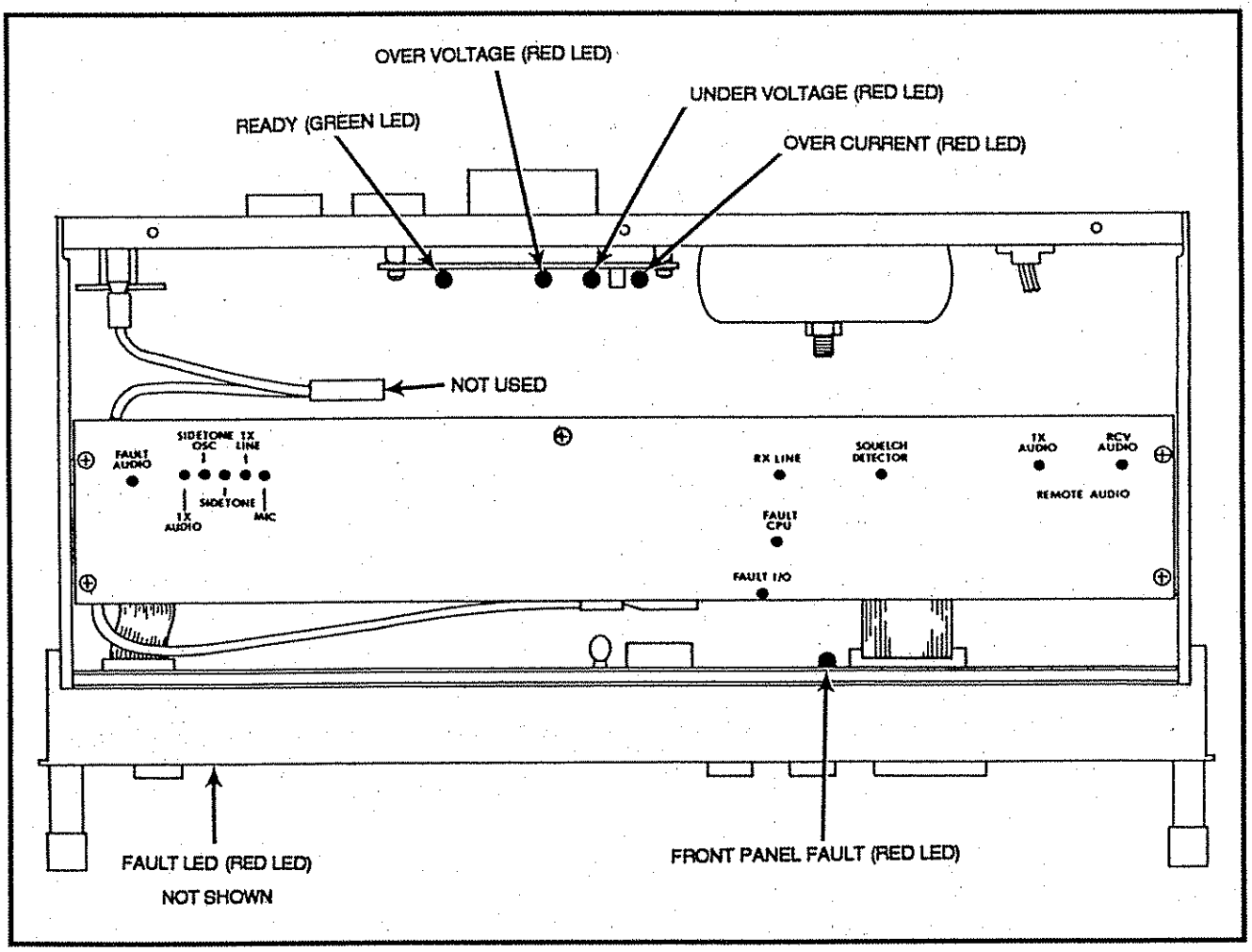

Figure 5.4.1.3 Top View RCU-9310 LRU "Fault Indicators".

5.4.2.5 POWER SUPPLY FAULT

This indicates a failure of the +28VDC out of PC Assembly 3A3A2 usually 3A3A2-F1.

a) Turn OFF RCU-9310 and check 3A3A2-F1, replace as required.

b) If 3A3A2-F1 is not blown, use normal troubleshooting procedures and check the +28VDC lines on Mother Board assembly 3A2A5-J2 pins 23 and 24. If this is correct, the fault is on the CPU assembly 3A2A1.

   1) Turn RCU-9310 Off and remove and replace PC assembly 3A2A1. See Figures 5.4.2.1 thru 5.4.2.4.

   2) Turn ON RCU-9310 and repeat "BITE TEST". Upon completion of a successful test, return RCU-9310 to operational status.

   3) Return failed PC Assembly 3A2A1 to factory for repair.

5.5 TROUBLESHOOTING WITH SELF-SURVEILLANCE BITE

Refer to Figure 5.4.1.3.

5.5.1 AC POWER SUPPLY

The Self-Surveillance Bite for the AC power supply consists of the following LED's (See Figure 5.4.1.3)

a) GREEN = READY (3A3A1-CR8)

b) RED = OVER VOLTAGE (3A3A1-CR7)

c) RED = UNDER VOLTAGE (3A3A1-CR6)

d) RED = OVER CURRENT (3A3A1-CR3)

TROUBLESHOOTING GUIDE.

SYMPTOM(s)	POSSIBLE TROUBLE(s)	CHECKS & CORRECTIVE ACTION(s)
AC POWER ONLY:		
Unable to turn unit ON. No LED's lit on 3A3A1.	1. No AC Power. 2. Open AC fuses 3A3F1 or F2.	1. Check AC power input and take appropriate action. 2. Replace F1 or F2. If fuse opens again use normal trouble-shooting procedures, locate and repair short in AC power supply.

TROUBLESHOOTING GUIDE (CONT...)

SYMPTOM(s)	POSSIBLE TROUBLE(s)	CHECKS & CORRECTIVE ACTION(s)
Unable to turn unit ON and GREEN READY LED on 3A3A1 lit.	1. 3A3A2-K2 or associated circuitry 3A3A2-Q2 or Q3 faulty.	1. Troubleshoot and repair or replace faulty component. 2. Remove and replace PC Assembly 3A3A2.
Unable to turn unit ON and RED UNDER VOLTAGE LED on 3A3A1 lit.	1. 3A3A1-Q1 faulty. 2. Faulty component(s) on 3A3A1.	1. Replace Q1. 2. Troubleshoot and replace faulty components, or remove and replace PC Assembly 3A3A1.
AC or DC POWER:		
Unit turns ON, unable to turn ON Front Panel LCD back lite. Run local BITE. Unit displays "POWER SUPPLY FAULT". No audio tone during audio test and displays "AUDIO FAULT" and Front Panel FAULT LED is lit.	1. 3A3A2-F1 open.	1. Replace F1, if fuse opens again use normal troubleshooting procedures, locate and repair short on +28VDC lines in unit.
Unit turns on, Front Panel LCD glows, but no information is displayed. Unit has no RED FAULT LED's lit. GREEN READY LED on 3A3A1 is lit.	1. 3A3A2-U1 or associated circuitry faulty.	1. Replace U1. 2. Troubleshoot and replace faulty components or remove and replace PC Assembly 3A3A2.
Unit turns on, Front Panel LCD glows, but no information is displayed. Unit has no RED FAULT LED's lit. With AC power applied GREEN READY LED ON 3A3A1 is lit. With DC only READY LED will not be lit.	1. 3A3A2-U2 or associated circuitry faulty.	1. Replace U2. 2. Troubleshoot and replace faulty components or remove and replace 3A3A2.
DC POWER ONLY:		
Unable to turn unit on.	1. No DC power. 2. 3A3A-F3 open. 3. 3A3A2-K1, K2 or associated circuitry faulty.	1. Check DC power input and take appropriate action. 2. Replace F3, if fuse opens again, use normal troubleshooting procedures, locate and repair short in DC circuitry. 3. Troubleshoot and replace faulty component(s) or remove and replace PC Assembly 3A3A2.

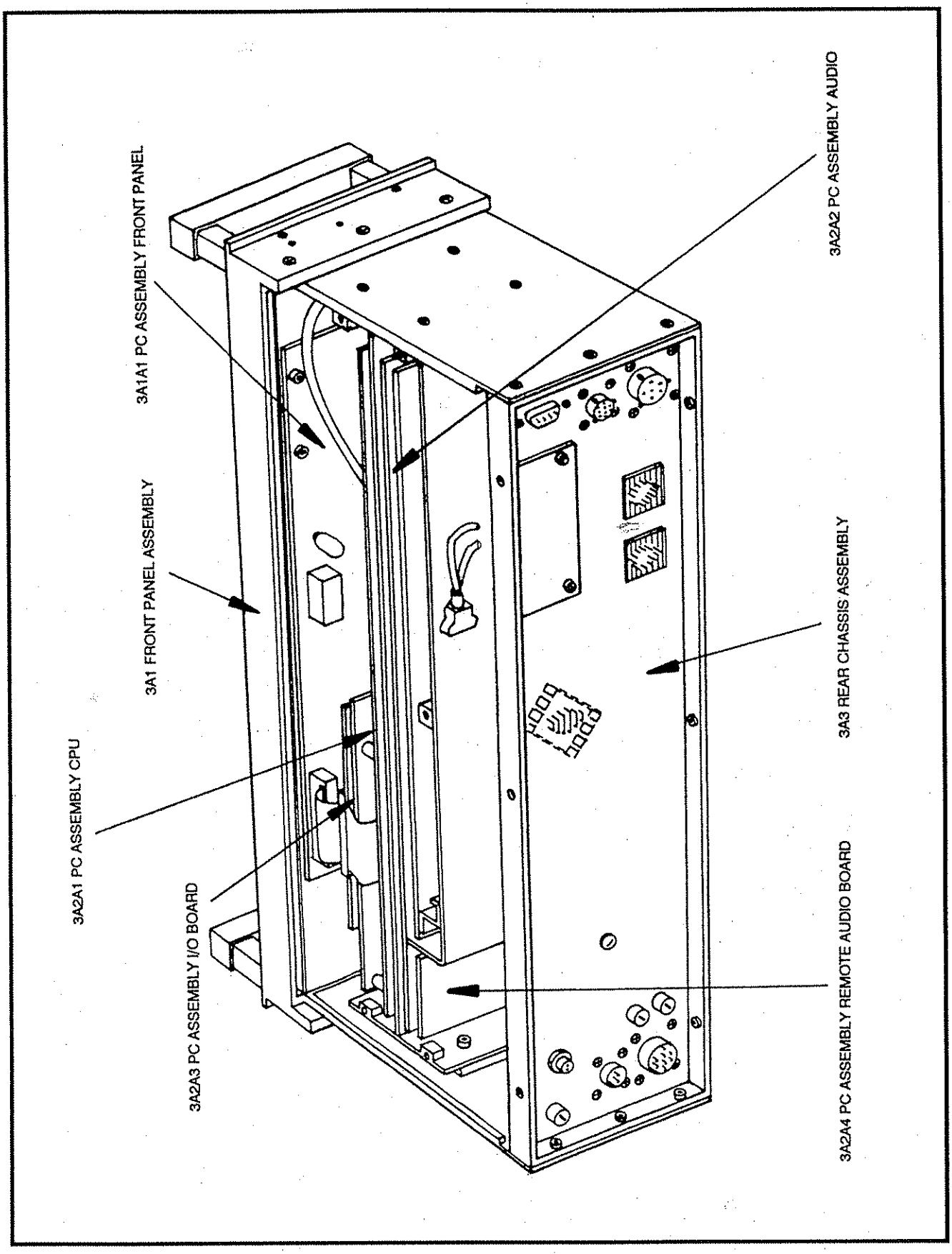

Figure 5.4.2.1 Major Assembly Locations.

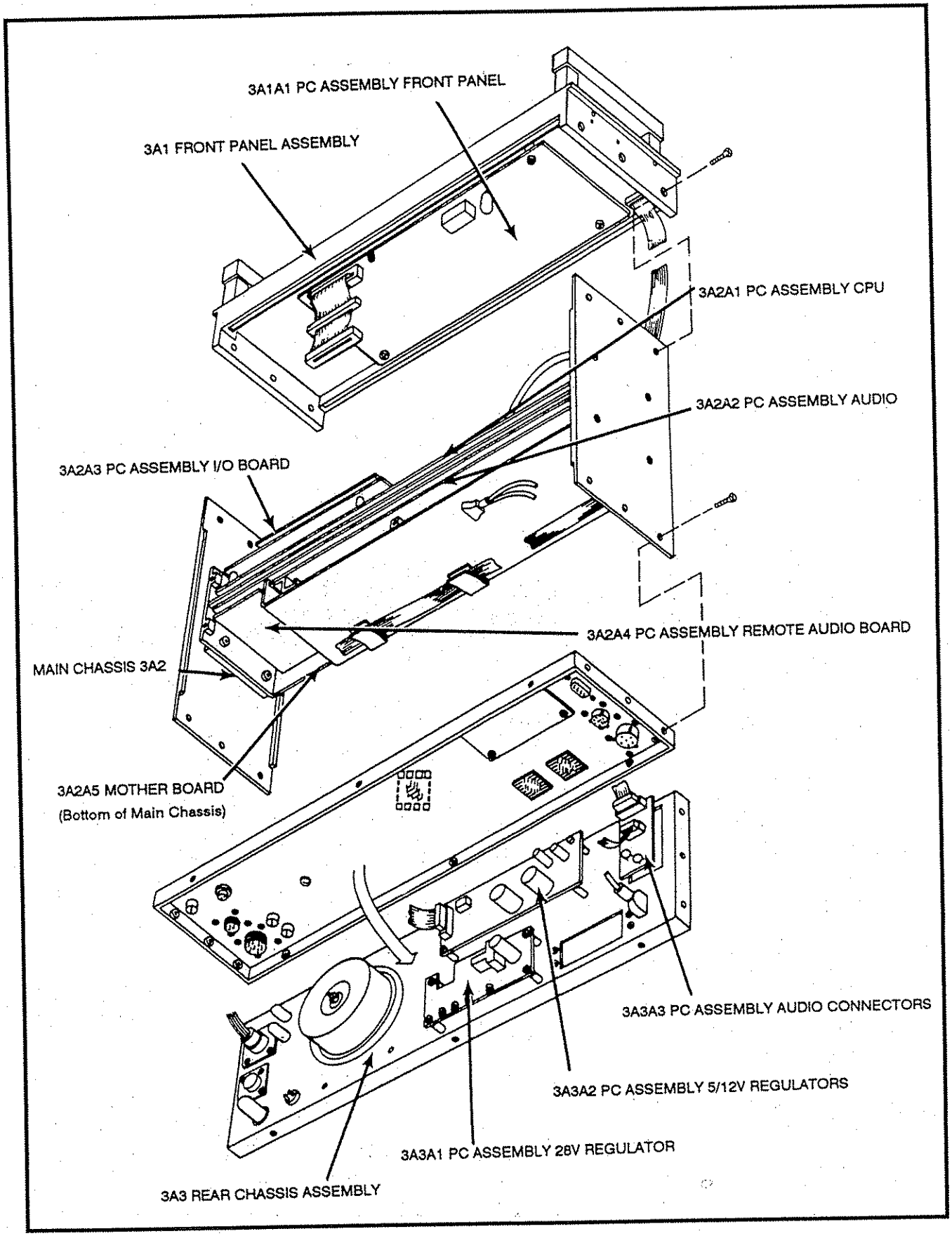

Figure 5.4.2.2 Removal of Front and Rear Panel and Major Assemblies Locations.

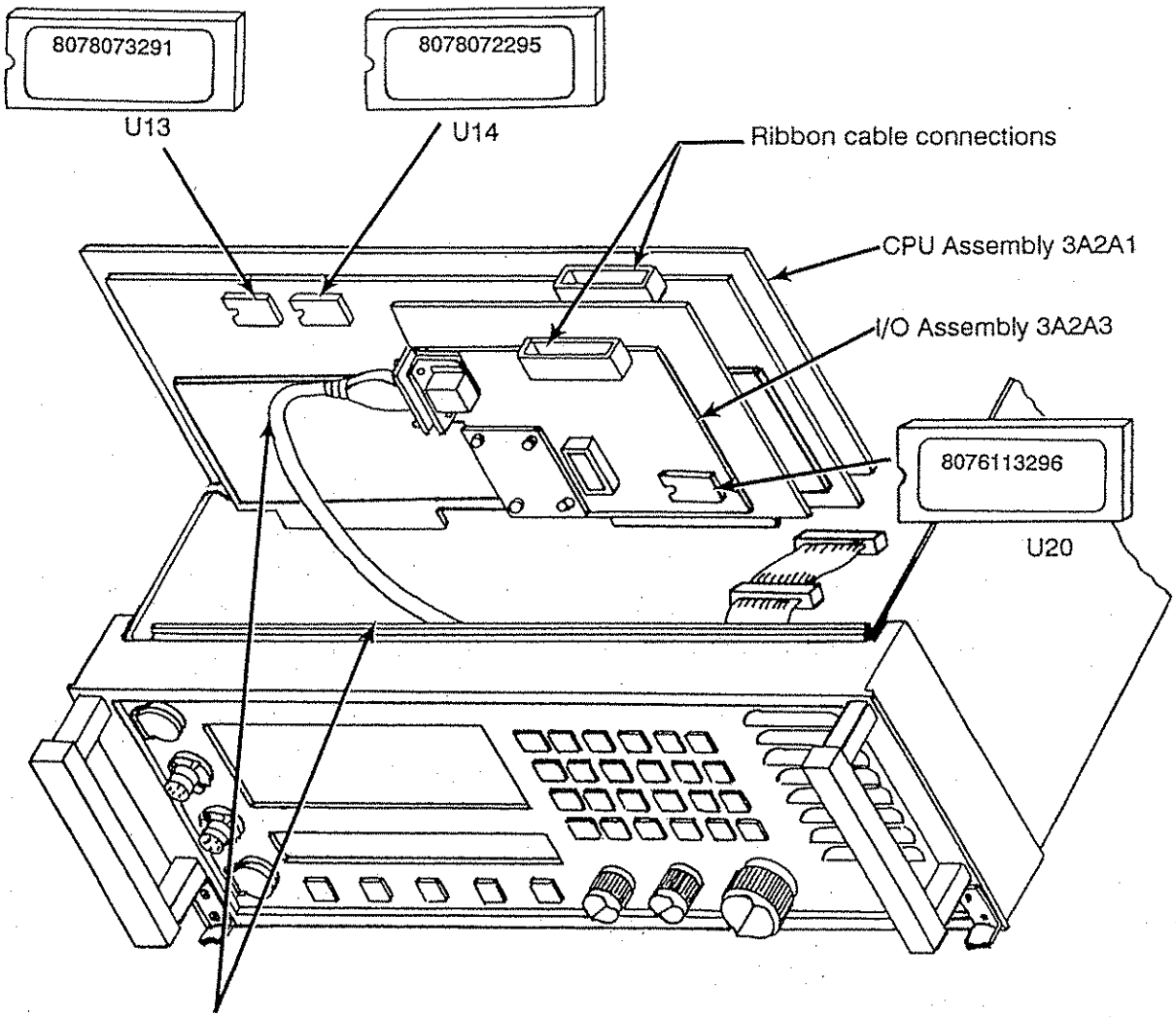

WARNING

Make sure I/O cable doesn't catch on the black transformer located on the Front Panel as the CPU Assembly is removed and replaced.

Figure 5.4.2.3 Removal / Replacement of CPU 3A2A1 and I/O 3A2A3.

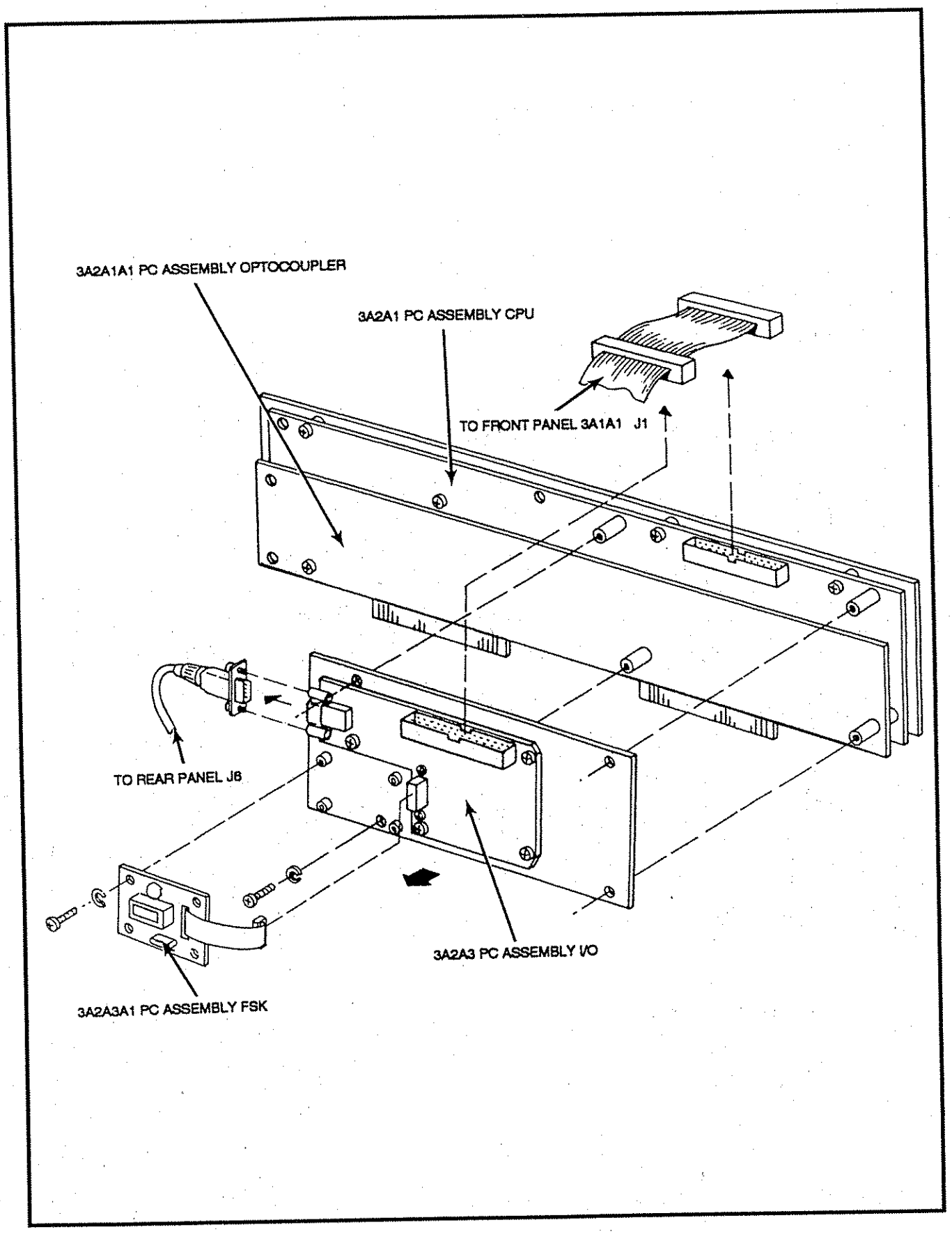

Figure 5.4.2.4 Removal / Replacement of I/O 3A2A3 or FSK 3A2A3A1.

5.5.2 INSTALLATION OF NEW BACKLIGHTING DEVICES FOR FRONT PANEL LCDs.

The Backlighting devices for the two (2) Front Panel LCD's P/N 8076041791 and P/N 8076040892 will gradually lose their luminescence with time. For this reason operating personnel should turn OFF the panel light when ever it is not needed to give the Backlighting devices the longest possible life. This is accomplished by depressing the 'PNLLT' push button on the Front Panel to turn OFF the Backlighting and depressing it again to turn the Back- lighting ON again when needed. Once the Backlighting devices have lost their luminescence, the backlight may be renewed by ordering replacement Backlighting devices for the applicable LCD and installing per Figures 5.5.2.1 through 5.5.2.3.

1. Custom LCD, Full Function, P/N 8076040604.
   Replacement Backlight, Assembly P/N 8076040892.

2. Custom LCD, 1 x 40 Character, Assembly P/N 8076041791.
   Replacement Backlight, P/N 8076041708.

NOTE: Once the Backlights have been replaced initially, they can be replaced again as needed. When the luminescence has decreased remove the installed Backlight and insert a new one in its place.

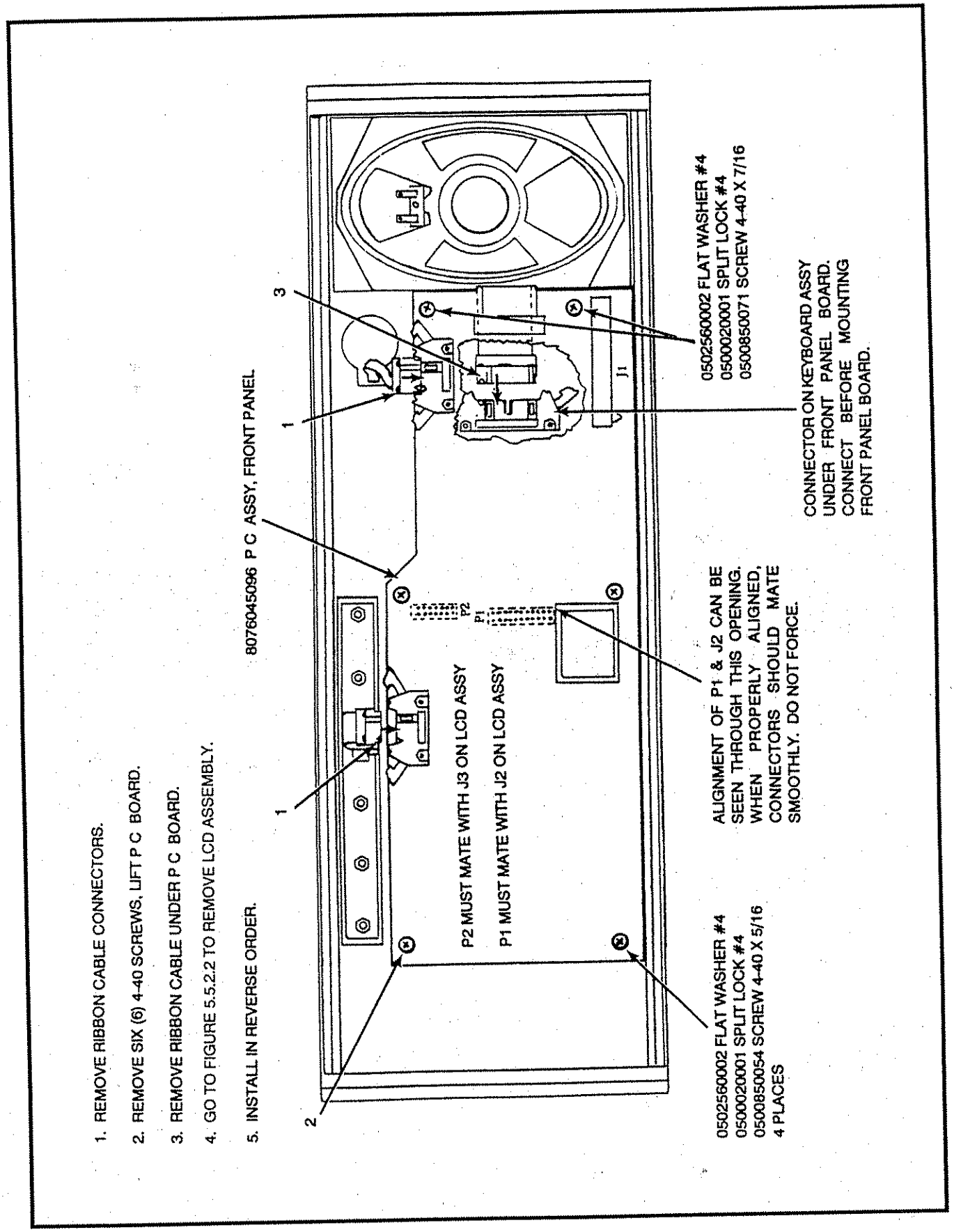

Figure 5.5.2.1 Removal and Installation of Front Panel PC Assembly.

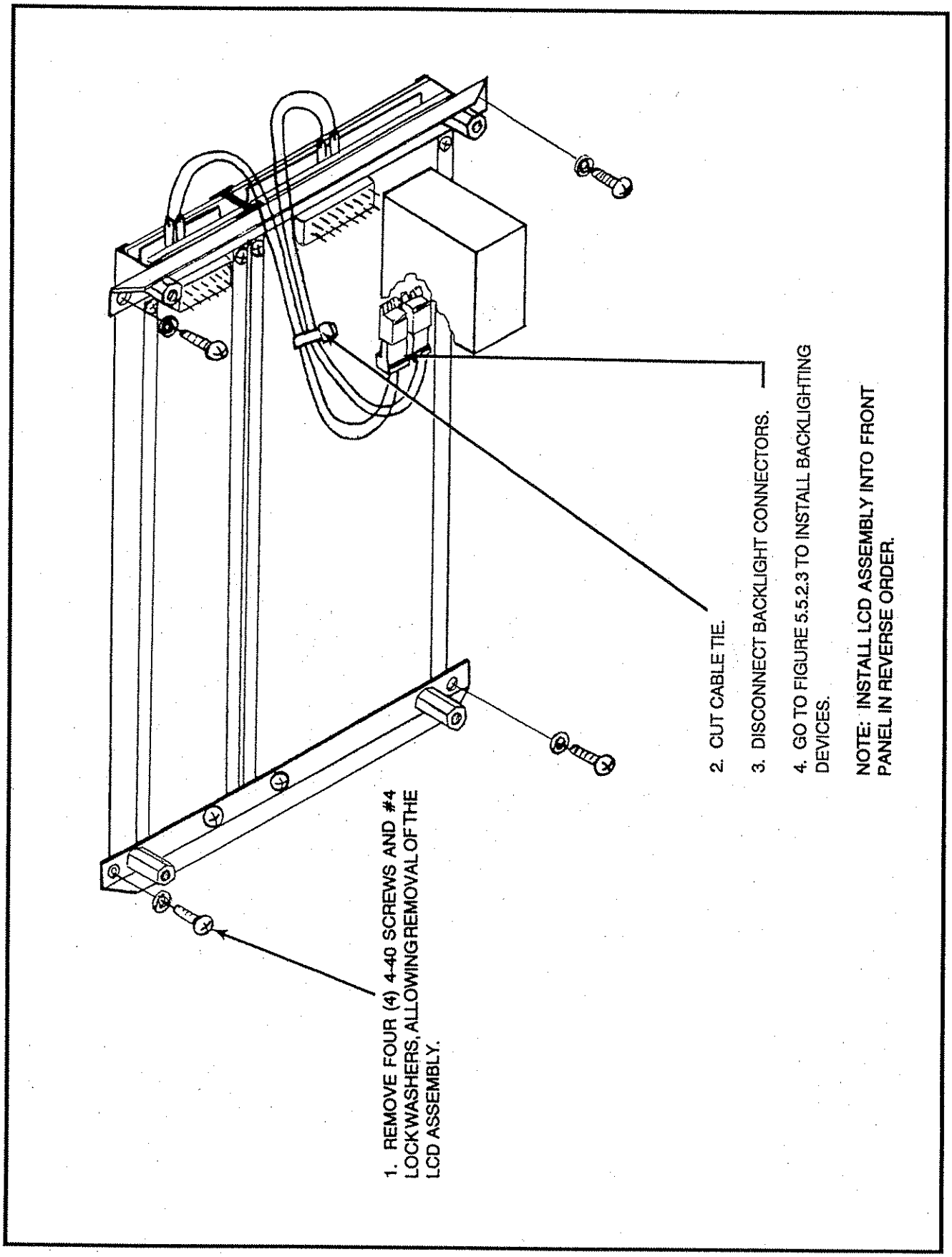

Figure 5.5.2.2 Removal and Installation of LCD Assembly.

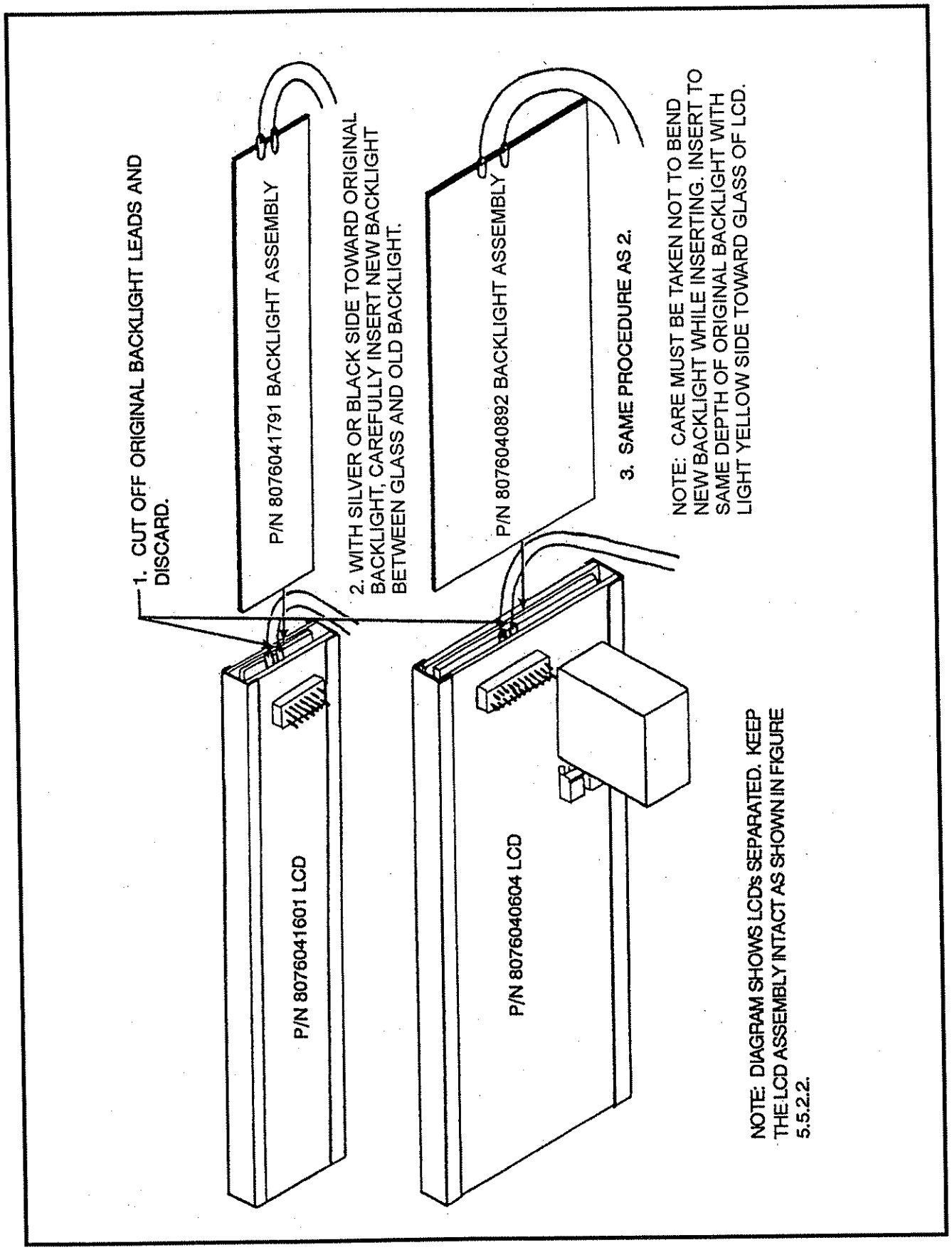

Figure 5.5.2.3 Installation of Backlighting Devices.

5.6 TEST EQUIPMENT REQUIRED OR EQUIVALENT

Multimeter	Simpson 260
Digital Multimeter	Leader LDM-853A
Audio Generator	Leader Model LAG-120B
Audio Voltmeter	Leader Model LMV-181A
Frequency Counter	Systron-Donner Model 6050
Oscilloscope 100 MHZ Bandwith	Tektronix 465
Microphone	Sunair P/N 8076000602
CW Key	Sunair P/N 5024000994
Card Extender	Sunair P/N 8076003091
600 ohm 1/4 Watt Resistors	

WARNING: The adjustments called out in the following alignments are all that should be attempted. Any other adjustments not called out are factory adjustments and cannot be done in the RCU-9310. See Figures 5.7.1.1 and 5.7.2.1for test equipment connections.

5.7 TEST AND ALIGNMENT

5.7.1 TRANSMIT REMOTE AUDIO

The RCU-9310 transmit audio circuits have been factory adjusted to output OdBm audio signal to the transceiver.

The RCU-9310 is checked and aligned as a stand alone unit by connecting unit and test equipment as shown in Figure 5.7.1.1 and accomplishing the following checks and alignments. Use Figures 5.7.1.2. and 5.7.1.3

a) Turn on RCU-9310, go to I/O menu and turn 'OFF' the I/O. Select 'LOCAL', 'MTR-XMT', 'LINE' and 'LINE AUDIO A' and 'MODE CW'.

b) On Audio Board Assembly 3A2A2 set S1 all segments to 'OFF'. Connect CW Key to front panel J1 and key unit or connect a ground to 3A2A5 J3 pin 6.

   1) 1000 Hz audio tone should be heard from front panel speaker. Measure audio level at 3A2A5 J3 pins E and C and adjust 3A2A2 R42 as required for.245 VRMS. With a 600 ohm resistor across rear panel J4 pins A and C measure the audio level at 3A2A5 J5 pins 3 and C and adjust 3A2A4 R1 for OdBm. The CW tone heard in the speaker may be adjusted for loudness with 3A2A2 R29, as volume control has no effect. Unkey unit.

   2) Change mode to USB and connect Audio Oscillator to microphone audio J3/J4 pins A and D, adjusted for 1000 Hz at 100 millivolts and a key switch across pins C and A or ground 3A2A5 J4 pin 5 to key unit. Measure the audio at 3A2A5 J3 pins E and C and adjust 3A2A2 R8 for.245 VRMS and check the output at 3A2A5 J5 pins 3 and C for OdBm. Unkey the unit.

   3) With Audio Oscillator set to 1000 Hz at OdBm connected to rear panel J3 pins S and J and a key switch across pins G and R or ground 3A2A5 J3 pin 20 to key the unit. Measure the audio level at 3A2A5 J3 pins E and C and adjust 3A2A2 R58 as required for .245 VRMS. Check the output at 3A2A5 J5 pins 3 and C for OdBm.

4) Adjust R162 as required for bar meter on RCU-9310 front panel to display OdBm ±one bar. (You will have to have 3A2A2 on card extender P/N 8076003091 to adjust R162).

5) Set 3A2A2 S1 segments 1 and 3 to 'ON'. Measure the audio at 3A2A5 J3 pins E and C and adjust 3A2A2 R21 for .245 VRMS. Check output at 3A2A5 J5 pins 3 and C for OdBm.

6) Checking the output at 3A2A5 J5 pins 3 and C vary the Audio Oscillator output from -10dBm to +10dBm. The output at J5 should remain constant at OdBm. Front panel bar meter should display from -10dBm to +10dBm while varying the Audio Oscillator. Unkey the unit.

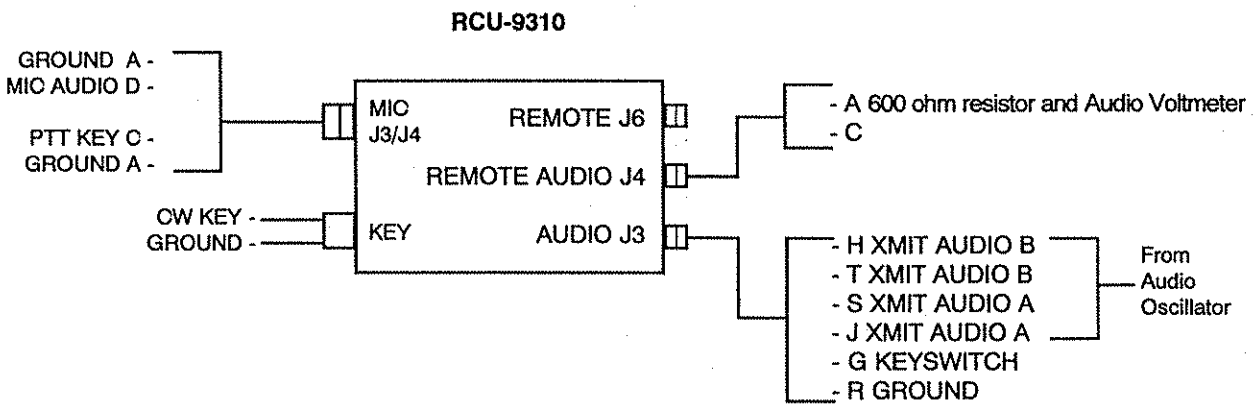

Interconnection of RCU-9310 Remote Control Unit and Test Equipment.

Figure 5.7.1.1 RCU-9310 Stand Alone Audio Test Set Up.

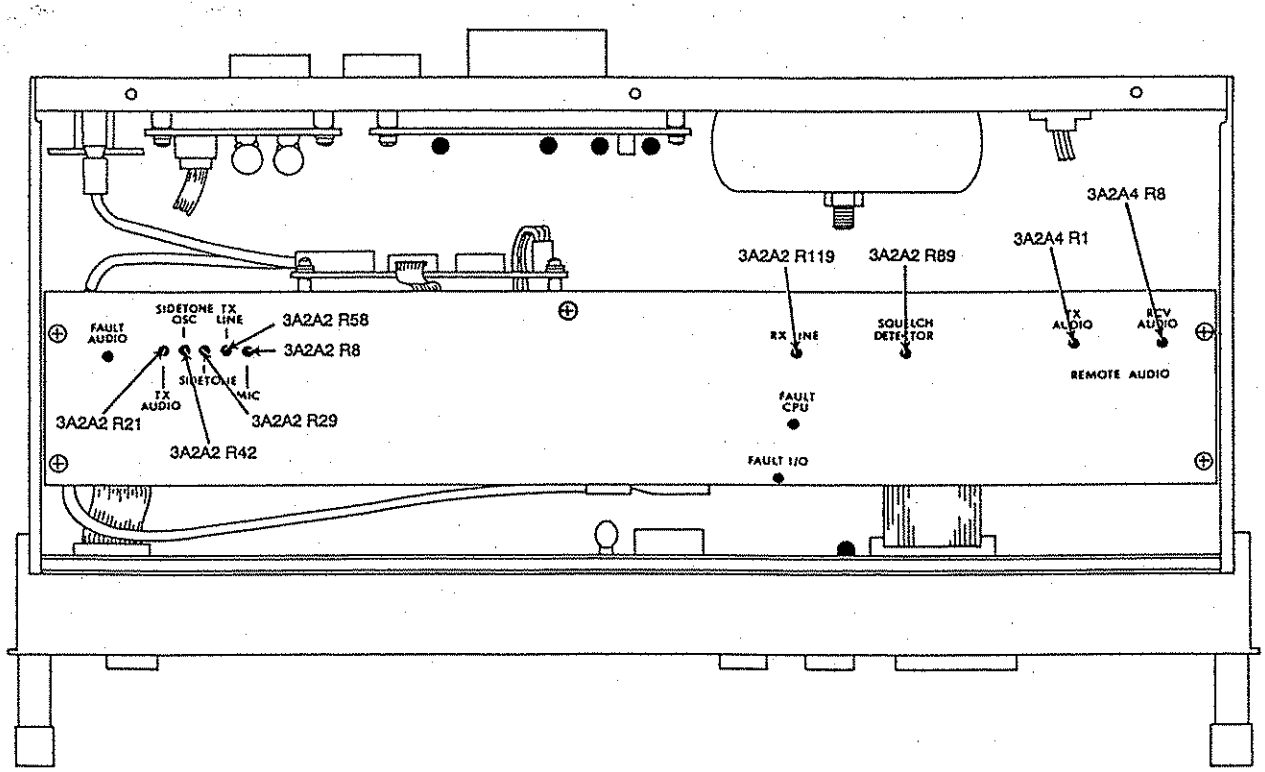

Figure 5.7.1.2 Top View RCU-9310 Alignment Adjustment Locations.

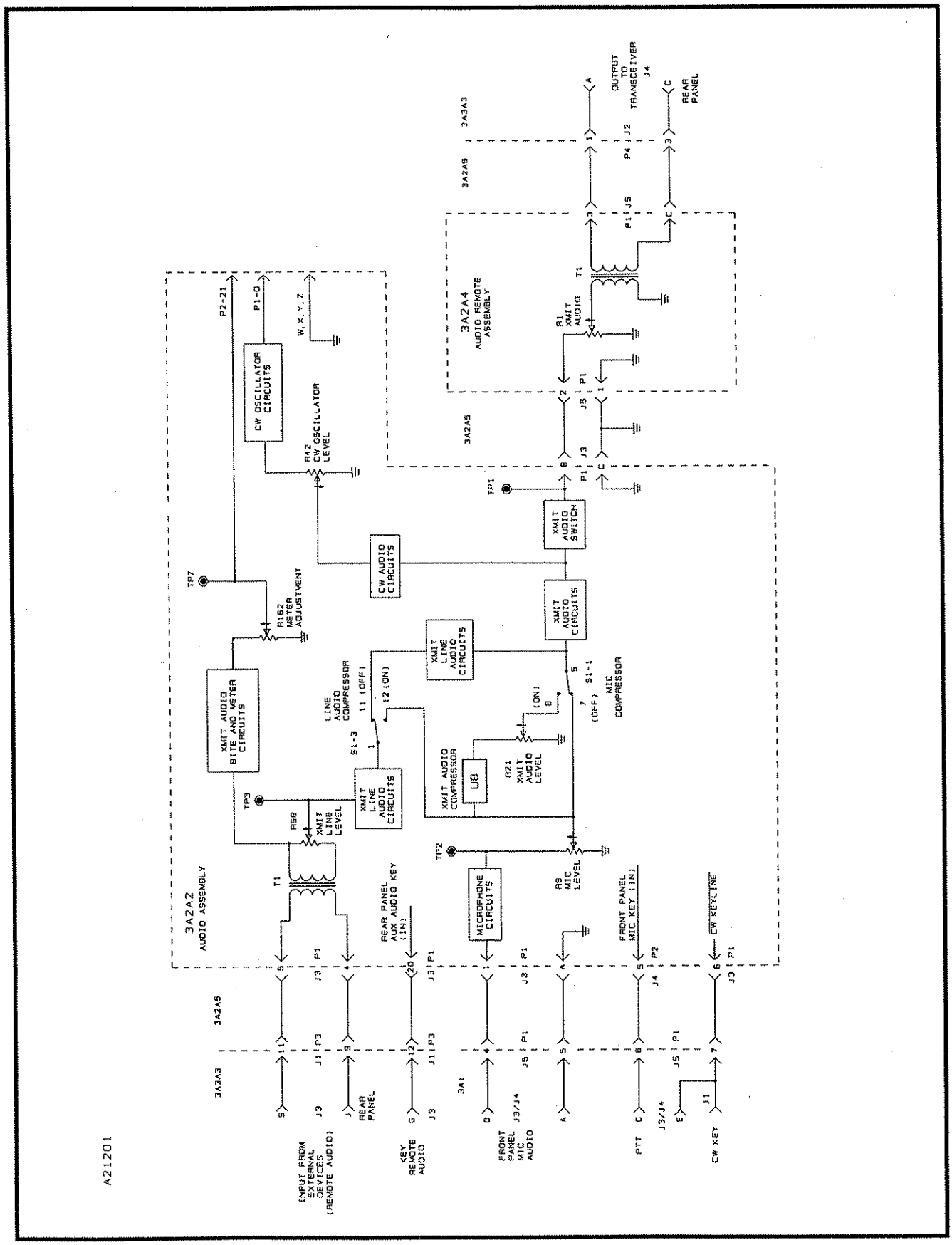

Figure 5.7.1.3 Transmit Path Audio A.

5.7.2 RECEIVE REMOTE AUDIO

The RCU-9310 receive audio circuits have been factory adjusted to provide an OdBm output signal from an OdBm input signal from transceiver.

The RCU-9310 is checked and aligned as a stand alone unit by connecting the unit and test equipment as shown in Figure 5.7.2.1. and accomplishing the following checks and alignments. Use Figures 5.7.1.2 and 5.7.2.2.

a) Turn on RCU-9310, go to I/O menu and turn 'OFF' the I/O. Select 'LOCAL', 'MTR-RCV', 'LINE' and 'LINE AUDIO A'.

   1) With 1000 Hz OdBm input at Remote Audio J4 pins B and D, check for OdBm level at 3A2A5 J5 pins 5 and E.

   2) Measure audio level at 3A2A5 J3 pins H and J and adjust 3A2A4 R8 as required for a reading of .180 VRMS.

   3) Measure audio level at 3A2A5 J4 pins 1 and 2 and adjust 3A2A2 R1 19 as required for a reading of OdBm with 600 ohm resistor connected across rear panel J3 pins M and L.

   4) Bar meter on RCU-9310 front panel should display OdBm ± one bar. Turn 'OFF' RCU-9310.

   5) With DVM measure resistance between right side of 3A2A2 R142 and ground. Adjust 3A2A2 R89 for a 2K ohm reading. Turn RCU-9310 'ON'.

   6) Turn the Squelch Control fully clockwise, the audio output of the RCU-9310 speaker should be squelched. Change the Audio Oscillator to 10kHz and return to 1000Hz. The speaker audio should be active and squelched approximately two (2) seconds after the speaker audio is first heard. This completes receive remote audio check and alignment. Turn 'OFF' and remove test equipment and return RCU-9310 to normal operation.

NOTE: If problems occur during the check and alignment, remove and replace Audio Assembly 3A2A2 or use normal troubleshooting procedures to check and repair defective circuits. Faulty Audio Assembly may be sent to Sunair for repairs.

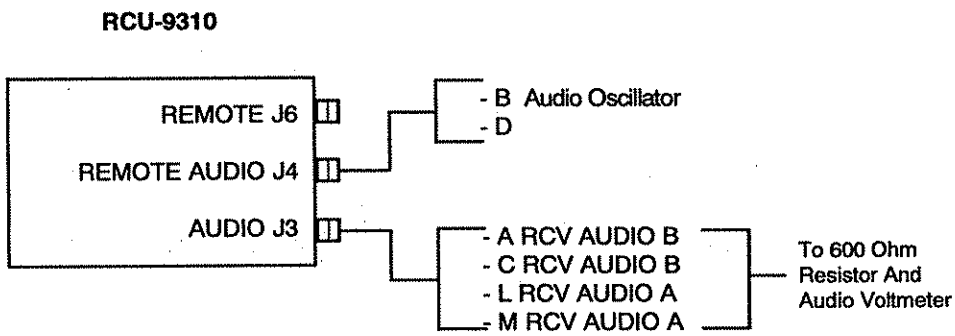

Interconnection of RCU-9310 Remote Control Unit and test equipment.

Figure 5.7.2.1 RCU-9310 Stand Alone Audio Test Set Up.

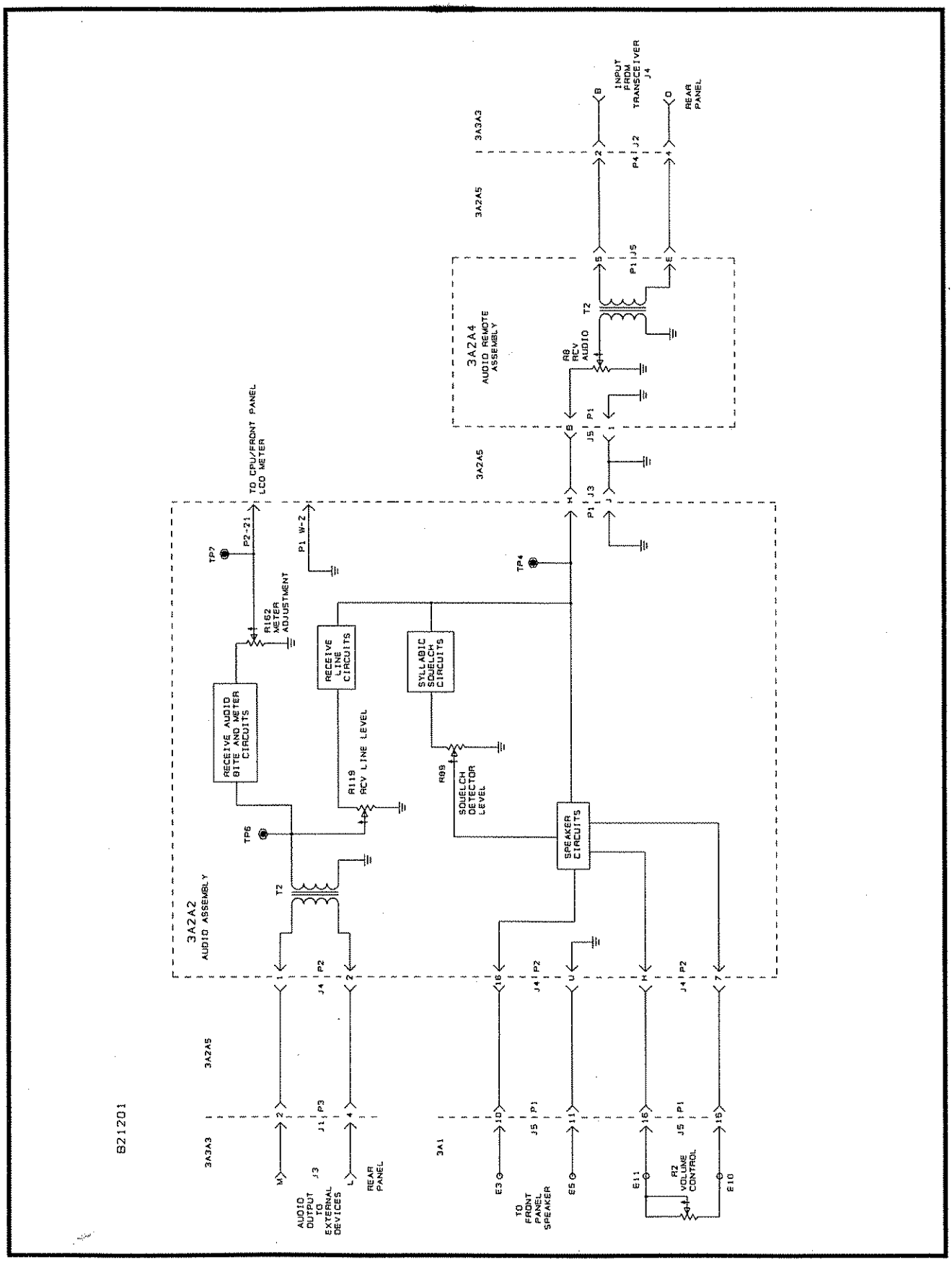

Figure 5.7.2.2 Receive Path Audio A.

5.7.3 SOFTWARE SWITCH SETTING CHECKS

Figure 5.7.3.1 shows the software switch settings on CPU PC Assembly 3A2A1 for RCU-9310 options.

SOFTWARE SWITCH SETTINGS ON CPU PC ASSEMBLY 3A2A1 for RCU-9310 OPTIONS.

NOTE: S1 Sections 1 through 8 are normally set to OPEN position (all rocker switches are raised at open side, see Figure 5.9.4). If while performing maintenance on the RCU-9310 the 3A2A1 is replaced, make sure 3A2A1 S1 is configured for non-optionized or for the applicable options installed in the remote operated transceiver.

S1 SECTION	SELECTION		OPTION/FUNCTION
	RAISED AT OPEN	RAISED AT NUMBER	
1	OPEN		Spare Function / Not used at this time.
			Spare Function / Not used at this time.
2	OPEN		Normal 1A2A3A1 Lincompex not installed at remote operated transceiver.
		2	Optional 1A2A3A1 Lincompex installed at remote operated transceiver.
3	OPEN		Normal ALE/Modem not installed at remote operated transceiver.
		3	Optional ALE/Modem installed at remote operated transceiver.
4	OPEN		Spare Function / Not used at this time.
5	OPEN		Normal No 1A2A4 FL5 installed at remote operated transceiver.
		5	Optional 1A2A4 FL5 installed at remote operated transceiver.
6	OPEN		Normal F-9800 Preselector/Postselector not installed at remote operated transceiver.
		6	Optional F-9800 Preselector/Postselector installed at remote operated transceiver.
7	OPEN		Not Connected / Not used at this time.
8	OPEN		Not Connected / Not used at this time.

Figure 5.7.3.1 Switch Settings for 3A2A1 S1.

THIS PAGE INTENTIONALLY LEFT BLANK.

r the RCU-9310, see Figure 5.8 below.

CRIPTION	SUNAIR PART NUMBER
ASSEMBLY	80760400XX
FRONT PANEL	8076045096
4	8076046807
FULL FUNCTION	8076040604
	8076040892
X40 CHARACTER	8076041601
	8076041791
5	8076046505
/O CHASSIS ASSEMBLY	80780100XX
CPU	8076070091
OPTOCOUPLER	8076075092
AUDIO	8076090091
I/O BOARD	8076110092
FSK MODEM	8076115094
REMOTE AUDIO	8078085095
MOTHER BOARD	8078017090
/O CHASSIS ASSEMBLY	80780100XX
8V REGULATOR 5 AMP	8078021496
5/12V REGULATORS	8078025092
AUDIO CONNECTORS	8078018096

blies and Subassemblies.

5.8 SCHEMATICS AND PARTS LISTS

The following pages contain schematics and parts lists for the RCU-9310, see Figure 5.8 below.

DESIGNATOR		DESCRIPTION	SUNAIR PART NUMBER
ASSEMBLY	SUBASSEMBLY		
3A1		FRONT PANEL ASSEMBLY	80760400XX
	3A1A1	PC ASSEMBLY FRONT PANEL	8076045096
	3A1A2	KEYBOARD, 6X4	8076046807
	3A1A3	CUSTOM LCD, FULL FUNCTION	8076040604
	3A1A3A1	EL BACKLIGHT	8076040892
	3A1A4	CUSTOM LCD, 1X40 CHARACTER	8076041601
	3A1A4A1	EL BACKLIGHT	8076041791
	3A1A5	KEYBOARD, 1X5	8076046505
3A2		MAIN CHASSIS P/O CHASSIS ASSEMBLY	80780100XX
	3A2A1	PC ASSEMBLY, CPU	8076070091
	3A2A1A1	PC ASSEMBLY, OPTOCOUPLER	8076075092
	3A2A2	PC ASSEMBLY, AUDIO	8076090091
	3A2A3	PC ASSEMBLY, I/O BOARD	8076110092
	3A2A3A1	PC ASSEMBLY, FSK MODEM	8076115094
	3A2A4	PC ASSEMBLY, REMOTE AUDIO	8078085095
	3A2A5	PC ASSEMBLY, MOTHER BOARD	8078017090
3A3		REAR CHASSIS P/O CHASSIS ASSEMBLY	80780100XX
	3A3A1	PC ASSEMBLY, 28V REGULATOR 5 AMP	8078021496
	3A3A2	PC ASSEMBLY, 5/12V REGULATORS	8078025092
	3A3A3	PC ASSEMBLY, AUDIO CONNECTORS	8078018096

Figure 5.8 RCU-9310 Assemblies and Subassemblies.

THIS PAGE INTENTIONALLY LEFT BLANK.

FINAL TESTED RCU-9310

	FINAL TESTED RCU-9310	80780012XX
3A2A1	PC ASSY, CPU	8076070091
3A2A2	PC ASSY, AUDIO	8076090091
3A2A3	PC ASSY. I/O BOARD	8076110092
3A2A3A1	PC ASSY. FSK MODEM	8076115094
3A2A4	PC ASSY, REMOTE AUDIO BOARD	8078085095
3A3	CHASSIS ASSY RCU-9310	80780100XX
3A2A1U13	EPROM W/RCU9310 SOFTWARE	8078073291
3A2A1U14	EPROM W/RCU9310 SOFTWARE	8078072295
3A2A3U20	EPROM W/I/O SOFTWARE	8076113296
	BUMPER 13/16 OD 13/16 LG	0508140005
	COVER, CARD CAGE RCU-9310	8078011903
	COVER, TOP RCU-9310	80780123XX
	COVER, BOTTOM RCU-9310	80780125XX

CONNECTOR KIT

	CONNECTOR KIT	8078000499
P3	CONNECTOR, POWER, 19 PIN MALE	1011140004
	CABLE CLAMP, MS3057-8A	1000200001
P4	CONNECTOR, POWER, 10 PIN MALE	1010650025
P6	CONNECTOR, POWER, DB-9, 9 PINFEM	1011960010
	HOOD, W/SCREW LOCK, DB-9	1011970015

CHASSIS ASSEMBLY 3A2/3A3

	CHASSIS ASSEMBLY 3A2/3A3	80780100XX
3A1	FRONT PANEL ASSY	80760400XX
3A2	CHASSIS, CARD CAGE, REMOTE	8078011504
3A2A5	PC ASSY. MOTHER BOARD	8078017090
3A3A1	PC ASSY, 28V REGULATOR, 5 AMP	8078021496
3A3A2	PC ASSY, 5/12V REGULATORS	8078025092
3A3A3	PC ASSY. AUDIO CONNECTORS	8078018096
3A3J1	CONNECTOR, POWER, 10 PIN, MALE	1011050005
3A3J2	CONNECTOR, POWER, 2 PIN ROUND	1010510037
3A3J5	CONNECTOR, POWER, 2 PIN ROUND	1011230011
3A3J6	CONNECTOR, POWER, 9 PIN MALE	1012380025
	JUNCTION SHELL, DB-9	1011130017
	CABLE, RIBBON, 9 COND, 28 AWG	1011150018
3A3CR1	DIODE, BRIDGE CBR25-040	1010630024
3A3F1	FUSE, MDL, 1.5 AMP, 125V	0896540006
3A3F2	FUSE, MDL, 1.5 AMP, 125V	0896540006
3A3F3	FUSE, MDQ, 5 AMP, 250V	0858660008
HSQ1	HEATSINK, TO-3 TRANSISTOR	1005130001
HSQ1	HEATSINK, T0-3 TRANSISTOR	1010710028
HSU1	HEATSINK, T0-3 TRANSISTOR	1005130001
HSU1	HEATSINK, T0-3 TRANSISTOR	1010700022
HSU2	HEATSINK, T0-3 TRANSISTOR	1005130001
HSU2	HEATSINK, T0-3 TRANSISTOR	1010700022
IQ1	INSULATOR, TO-3 SIL ELASTOMER	0841560005
IU1	INSULATOR, TO-3 SIL ELASTOMER	0841560005
1U2	INSULATOR, TO-3 SIL ELASTOMER	0841560005
3A3AQ1	TRANSISTOR, PNP, MJ11031	1010990012
3A3R1	RESISTOR 5, 5% 20W	1000080021
3A3R2	RESISTOR 5, 5% 20W	1000080021
3A3T1	TRANSFORMER, AC, 200VA	1010670026
3A3A2U1	IC. LINEAR LM350K	1010600028
3A3A2U2	IC. LINEAR LM350K	1010600028
XF1	FUSEHOLDER, PANEL MOUNT	0849030005
XF2	FUSEHOLDER, PANEL MOUNT	0849030005
XF3	FUSEHOLDER, PANEL MOUNT	0849030005
3A3ZS1	VARISTOR, MOV V140LA5	1011300010
3A3ZS2	VARISTOR, MOV V140LA5	1011300010
	CAP, PROTECTIVE .485 DIA.X 3/4	1009060015
	CLAMP, CABLE, FLAT 1 1/16 WIDE	1008650005
	CONNECTOR, RIBBON, 10 PIN FEM	1008070017
	CONNECTOR, HOUSING, 20 PIN	1009070011
	COVER, REAR PANEL	8078015305
	LH SIDE PANEL	80780103XX
	RH SIDE PANEL	80780102XX
	STANDOFF, F-F, 4-40 .375 L	1010830023
	PANEL, REAR, REMOTE	8078015101

Nametag 8078 040 903

Figure 5.8.1 Final Tested RCU-9310, Chassis Assembly 3A3, and Connector Kit.

FRONT PANEL ASSEMBLY 3A1

	FRONT PANEL ASSEMBLY 3A1	80760400XX
3A1A1	PC ASSY, FRONT PANEL	8076045096
3A1A2	KEYBOARD, 6X4	8076046807
3A1A3	CUSTOM LCD, FULL FUNCTION	8076040604
3A1A3A1	EL BACKLIGHT	8076040809
3A1A4	CUSTOM LCD, 1 X 40 CHARA	8076041601
3A1A4A3	EL BACKLIGHT	8076041708
3A1A5	KEYBOARD, 1X5	8076046505
C1	CAP. .01µF, 50V, X7R 20%	0281730008
C2	CAP. .01µF, 50V, X7R 20%	0281730008
C3	CAP. .01µF, 50V, X7R 20%	0281730008
C4	CAP. .01µF, 50V, X7R 20%	0281730008
C5	CAP. .01µF, 50V, X7R 20%	0281730008
C6	CAP. .01µF, 50V, X7R 20%	0281730008
CR1	DIODE, LED, RED	1006710001
J1	CONNECTOR, 1/4 IN JACK, 2 COND	0840850000
J2	CONNECTOR, PHONE JACK, 2 COND.	0754430006
J3	CONNECTOR, AUDIO, 5 PIN	1003300022
J4	CONNECTOR, AUDIO, 5 PIN	1003300022
J5	CONNECTOR, HEADER, 20 PIN MALE	1011210207
J6	CONNECTOR, HEADER, 14 PIN MALE	1011210142
LS1	SPEAKER, 3X5 OVAL, 8 OHM, 5W	0877970009
R3	RESISTOR 680, 10%, 1/4W	0176630007
R1/S1	POT. 25K W/SPST SW.	1008790028
R2/S2	POT. 25K W/SPST SW.	1008790028
	MOUNTING BRACKET, KEYBOARD	8076040507
	BRACKET, SPEAKER	8076041309
	CABLE, RIBBON, 40 COND.	1008080012
	CONNECTOR, RIBBON, 10 PIN FEM	1008070017
	CONNECTOR, RIBBON, 40 PIN FEM	1008110035
	JACK COVER, CONNECTOR	0840860005
	PROTECTIVE COVER, LCD MODULE	8076042500
	GASKET KIT, FRONT PANEL	8076042305
	HANDLE	5024043600
	KEY, POLARIZING	1008070033
	KNOB, .70 D, BLK, WHT DOT,SKRT	0346060001
	KNOB, 1.25D, BLK, SKIRTED	1011490005
	MTG RAIL, RH, LCD MODULE	8076042607
	MTG RAIL, LH, LCD MODULE	8076042704
	PANEL, FRONT	80760402XX
	SHAFT ENCODER	1008810029
	SPACER, HANDLE	5024043502
	STANDOFF, F-F, 4-40 X.437LG	1011240009
	STANDOFF, M-F, 4-40 X.312LG	1011250004

1150BP

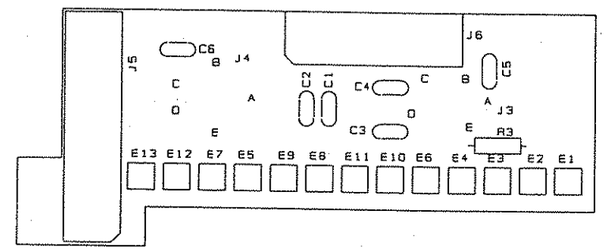

Figure 5.8.2 Front Panel Assembly 3A1, page 1 of 6.

A1150C

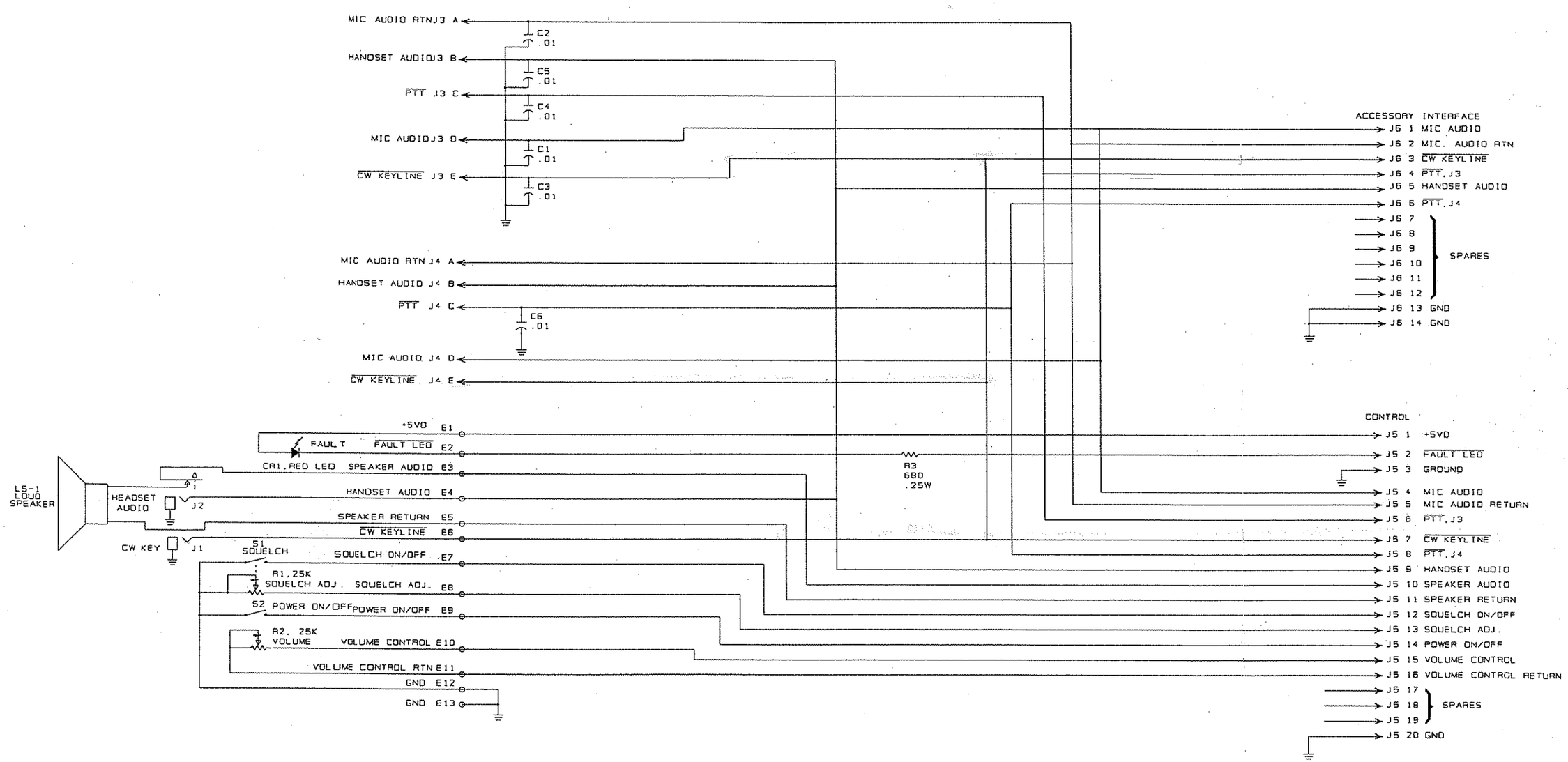

Figure 5.8.2 Front Panel Assembly 3A1, page 2 of 6.

PC ASSY, FRONT PANEL 3A1A1

	PC ASSY, FRONT PANEL 3A1A1	8076045096
C1	CAP. .47µF, 50V, X7R 20%	0283377771
C2	CAP. 0.1µF, 50V, X7R, 20%	0281610002
C3	CAP. 0.047 µF, 50V, X7R, 10%	1010740008
C4	CAP. 100µF 20V 20%	1005120030
C5	CAP. 47µF, 35V	0282190007
C6	CAP. 0.001µF, 100V, X7R, 20%	0281630003
C7	CAP. 0.001µF, 100V, X7R, 20%	0281630003
C10	CAP. .01µF, 50V, X7R 20%	0281730008
C11	CAP. .01µF, 50V, X7R 20%	0281730008
C12	CAP. .01µF, 50V, X7R 20%	0281730008
C13	CAP. .01µF, 50V, X7R 20%	0281730008
C14	CAP. .01µF, 50V, X7R 20%	0281730008
C15	CAP. .01µF, 50V, X7R 20%	0281730008
C16	CAP. .01µF, 50V, X7R 20%	0281730008
C17	CAP. .01µF, 50V, X7R 20%	0281730008
C18	CAP. .01µF, 50V, X7R 20%	0281730008
C19	CAP. .01µF, 50V, X7R 20%	0281730008
C20	CAP. .01µF, 50V, X7R 20%	0281730008
C21	CAP. .01µF, 50V, X7R 20%	0281730008
C22	CAP. .01µF, 50V, X7R 20%	0281730008
C23	CAP. .01µF, 50V, X7R 20%	0281730008
C24	CAP. .01µF, 50V, X7R 20%	0281730008
C25	CAP. .01µF, 50V, X7R 20%	0281730008
C26	CAP. .01µF, 50V, X7R 20%	0281730008
C27	CAP. .01µF, 50V, X7R 20%	0281730008
C28	CAP. .01µF, 50V, X7R 20%	0281730008
C29	CAP. .01µF, 50V, X7R 20%	0281730008
C30	CAP. .01µF, 50V, X7R 20%	0281730008
C31	CAP. .01µF, 50V, X7R 20%	0281730008
C32	CAP. .01µF, 50V, X7R 20%	0281730008
C33	CAP. .01µF, 50V, X7R 20%	0281730008
C34	CAP. .01µF, 50V, X7R 20%	0281730008
C35	CAP. .01µF, 50V, X7R 20%	0281730008
C36	CAP. .01µF, 50V, X7R 20%	0281730008
C37	CAP. .01µF, 50V, X7R 20%	0281730008
C38	CAP. 22µF, 15V, T368	0296660001
C39	CAP. .01µF, 50V, X7R 20%	0281730008
C40	CAP. .01µF, 50V, X7R 20%	0281730008
C41	CAP. 1µF, 35V, T368	0283630001
C42	CAP. 22µF, 15V, T368	0296660001
C43	CAP. .01µF, 50V, X7R 20%	0281730008
C44	CAP. .01µF, 50V, X7R 20%	0281730008
C45	CAP. 22µF, 15V, T368	0296660001
CR1	DIODE, RECTIFIER 1N4004	0405180004
CR2	DIODE, RECTIFIER 1N4004	0405180004
CR3	DIODE, RECTIFIER 1N4004	0405180004
CR4	DIODE, LED, RED, PC MOUNT	1008480029
CR5	DIODE, RECTIFIER 1N4004	0405180004
J1	CONNECTOR, HEADER, 40PIN	1010740016
J2	CONNECTOR, PC, 10 PIN HEADER	1008070009
J3	CONNECTOR, PC, 10 PIN HEADER	1008070009
J4	SOCKET, BOARDMOUNT, 15 PIN	1011010151

Figure 5.8.2 Front Panel Assembly 3A1A1, page 3 of 6.

J5	SOCKET, BOARDMOUNT, 15 PIN	1011010151
P1	CONNECTOR, MOLEX 26 PIN	1008720020
P2	CONNECTOR, MOLEX 14 PIN	1008730025
P3	CONNECTOR, RIBBON, 20 PIN FEM	1008120031
Q1	TRANSISTOR, NPN, SI. 2N4922	0445490004
Q2	TRANSISTOR, NPN, SI. 2N2222A	0448580004
R1	RESISTOR 470, 5%, 1/4W	0184110009
R2	RESISTOR 470, 5%, 1/4W	0184110009
R3	RESISTOR 10K, 10%, 1/4W	0170410005
R4	RESISTOR 10K, 10%, 1/4W	0170410005
R5	RESISTOR 2.2K, 5%, 1/4W	0178070009
R6	RESISTOR 220, 10%, 1/4W	0171320000
R7	RESISTOR 47K, 10%, 1/4W	0171060008
R8	RESISTOR 330, 5%, 1/4W	0170910008
R9	RESISTOR 330, 5%, 1/4W	0170910008
R10	RESISTOR 6.8K, 5%, 1/4W	0174810008
R11	RESISTOR 6.8K, 5%, 1/4W	0174810008
R12	RESISTOR 22K, 5%, 1/4W	0172230004
R13	RESISTOR 100K, 10%, 1/4W	0170390004
RP1	RES NTWK 10 PIN SIP 10K COM	1006130021
U1	IC. DIGITAL 74HC374	1006450033
U2	IC. DIGITAL 74HC244	1006460039
U3	IC. DIGITAL 74HC30	1010240021
U4	IC. DIGITAL 74HC74	1008000019
U5	IC. DIGITAL 74HC14	1006490027
U6	IC. DIGITAL 74HC14	1006490027
U7	IC. DIGITAL 74HC10	1008010006
U8	IC. DIGITAL 74HC138	1006480013
U9	IC. DIGITAL 74HC138	1006480013
U10	IC. DIGITAL 74HC373	1006480030
U11	IC. LINEAR LM556	1011170019
U12	IC. DIGITAL 74HC374	1006450033
U13	IC. DIGITAL 74HC08	1006490019
U14	IC. DIGITAL 74HC14	1006490027
U15	IC. DIGITAL 74HC74	1008000019
U16	IC. DIGITAL 74HC74	1008000019
U17	IC. DIGITAL 74HC165	1008710016
U18	IC. DIGITAL MC14504	1006090037
U19	IC. DIGITAL MC14504	1006090037
U20	IC. DIGITAL MC14504	1006090037
U21	IC. DIGITAL MC14504	1006090037
U22	IC. DIGITAL MC14504	1006090037
U23	IC DIGITAL 74HC154	1010160028
U24	IC. DIGITAL 74HC02	1010290029
U25	IC. DIGITAL 74HC244	1006460039
U26	IC. DIGITAL 74HC374	1006450033
	CABLE, FLAT, 20 COND. 28AWG	1008080004
	CONNECTOR,PCB,TRANSITION,20PIN	1011090201
	KEY, POLARIZING	1008070033

1113DP

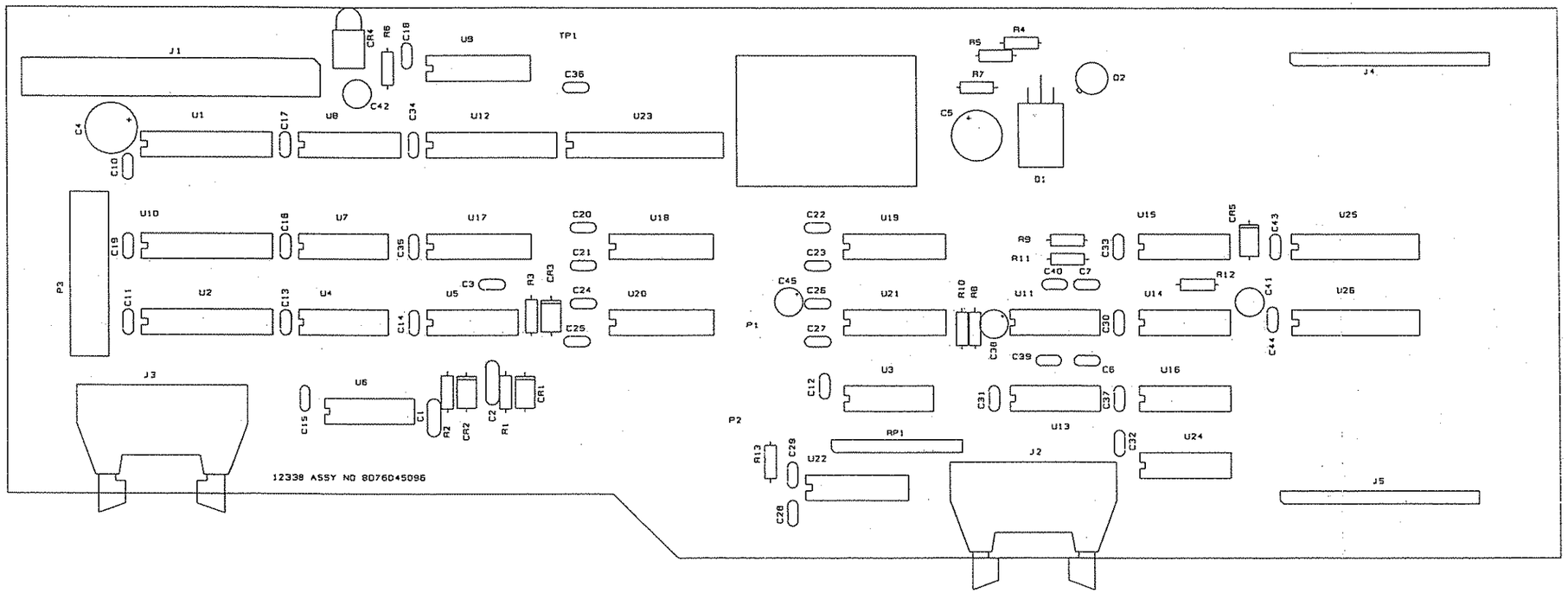

Figure 5.8.2 Front Panel Assembly 3A1A1, page 4 of 6.

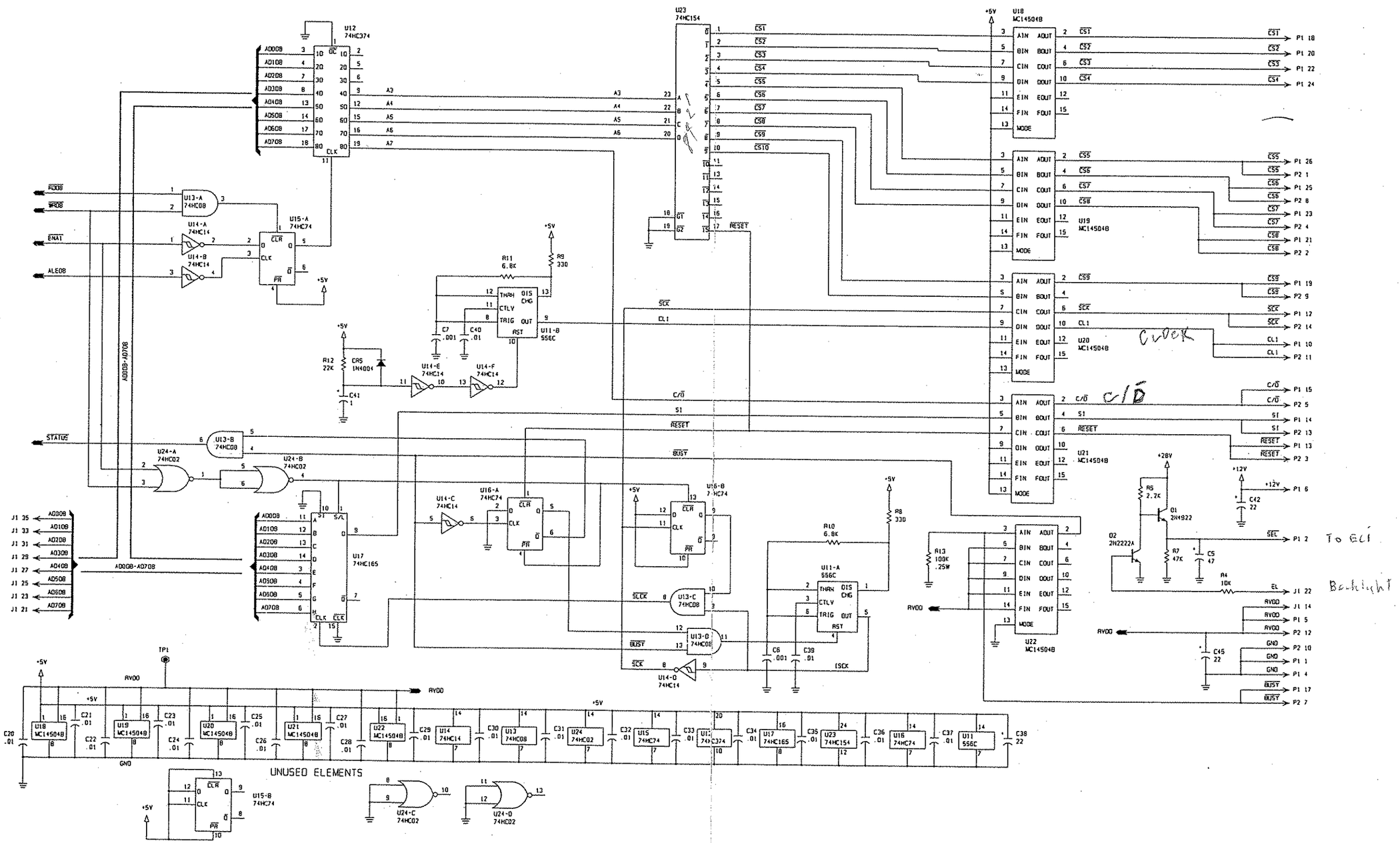

Figure 5.8.2 Front Panel Assembly 3A1A1, page 5 of 6.

NEW

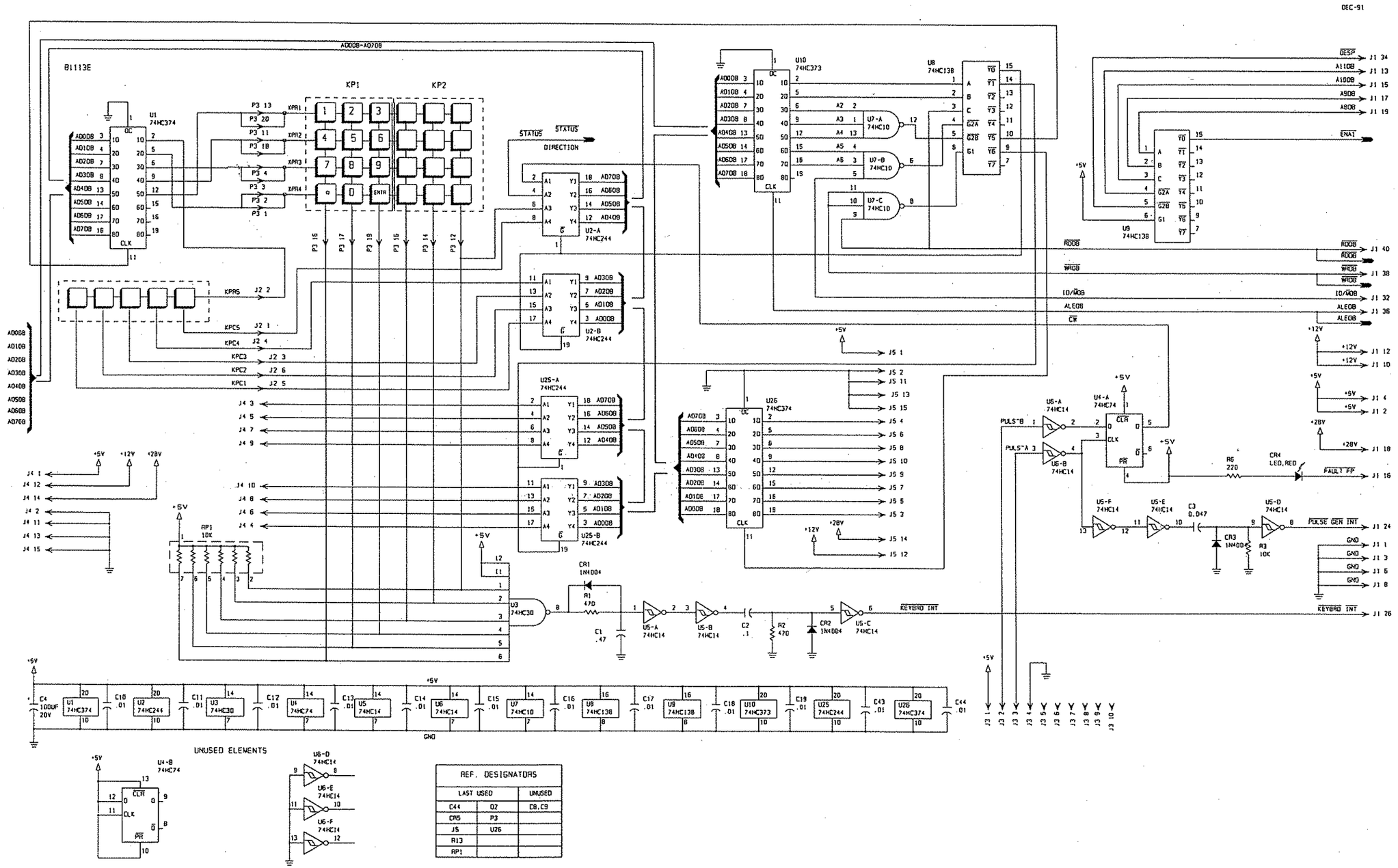

Figure 5.8.2 Front Panel Assembly 3A1A1, page 6 of 6.

PC ASSY, MOTHER BOARD 3A2A5

	PC ASSY, MOTHER BOARD 3A2A5	8078017090
C1	CAP. .01µF, 50V, X7R 20%	0281730008
C2	CAP. .01µF, 50V, X7R 20%	0281730008
C3	CAP. .01µF, 50V, X7R 20%	0281730008
C4	CAP. .01µF, 50V, X7R 20%	0281730008
C5	CAP. .01µF, 50V, X7R 20%	0281730008
C6	CAP. .47µF, 50V, X7R 20%	0283377771
C7	CAP. 15µF, 15V, 196D	0281720002
C8	CAP. 15µF, 15V, 196D	0281720002
C9	CAP. .01µF, 50V, X7R 20%	0281730008
C10	CAP. .01µF, 50V, X7R 20%	0281730008
J1	CONNECTOR, PC. 40 PIN DUAL	1010920006
J2	CONNECTOR, PC. 40 PIN DUAL	1010920006
J3	CONNECTOR, PC, 22PIN DUAL,FEM	1008830003
J4	CONNECTOR, PC, 22PIN DUAL,FEM	1008830003
J5	CONNECTOR, PC, 6 PIN DUAL, FEM	1011160005
L1	CHOKE, POWER	8076104700
L2	CHOKE, POWER	8076104700
L3	CHOKE, POWER	8076104700
L4	CHOKE, POWER	8076104700
P1	CONNECTOR, RIBBON, 20 PIN FEM	1008120031
P2	CONNECTOR, RIBBON, 26 PIN FEM	1008340031
P3	CONNECTOR, RIBBON, 20 PIN FEM	1008120031
P4	CONNECTOR, RIBBON, 10 PIN FEM	1008070017
U1	CRYSTAL OSCILLATOR, 5.00 MHZ	1010580027
XP1	CONNECTOR,PCB,TRANSITION,20PIN	1011090201
XP2	CONNECTOR,PCB,TRANSITION,26PIN	1011090261
XP3	CONNECTOR,PCB,TRANSITION,20PIN	1011090201
XP4	CONNECTOR,PCB,TRANSITION,10PIN	1011090104
	CABLE, FLAT, 20 COND. 28AWG	1008080004
	CABLE, RIBBON, 10 CONDUCTOR	1008340014
	CABLE, FLAT, 26 COND. 28AWG	1011180006

Figure 5.8.3 PC Assembly, Mother Board 3A2A5, page 1 of 4.

1088CP

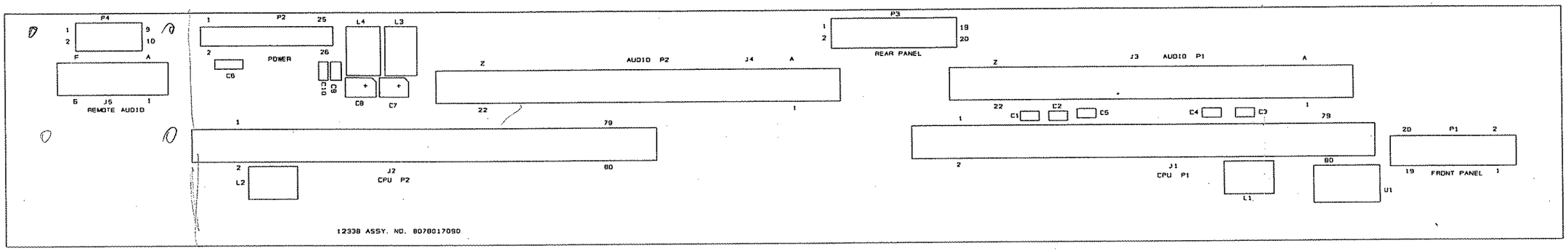

Figure 5.8.3 PC Assembly, Mother Board 3A2A5, page 2 of 4.

A1088D

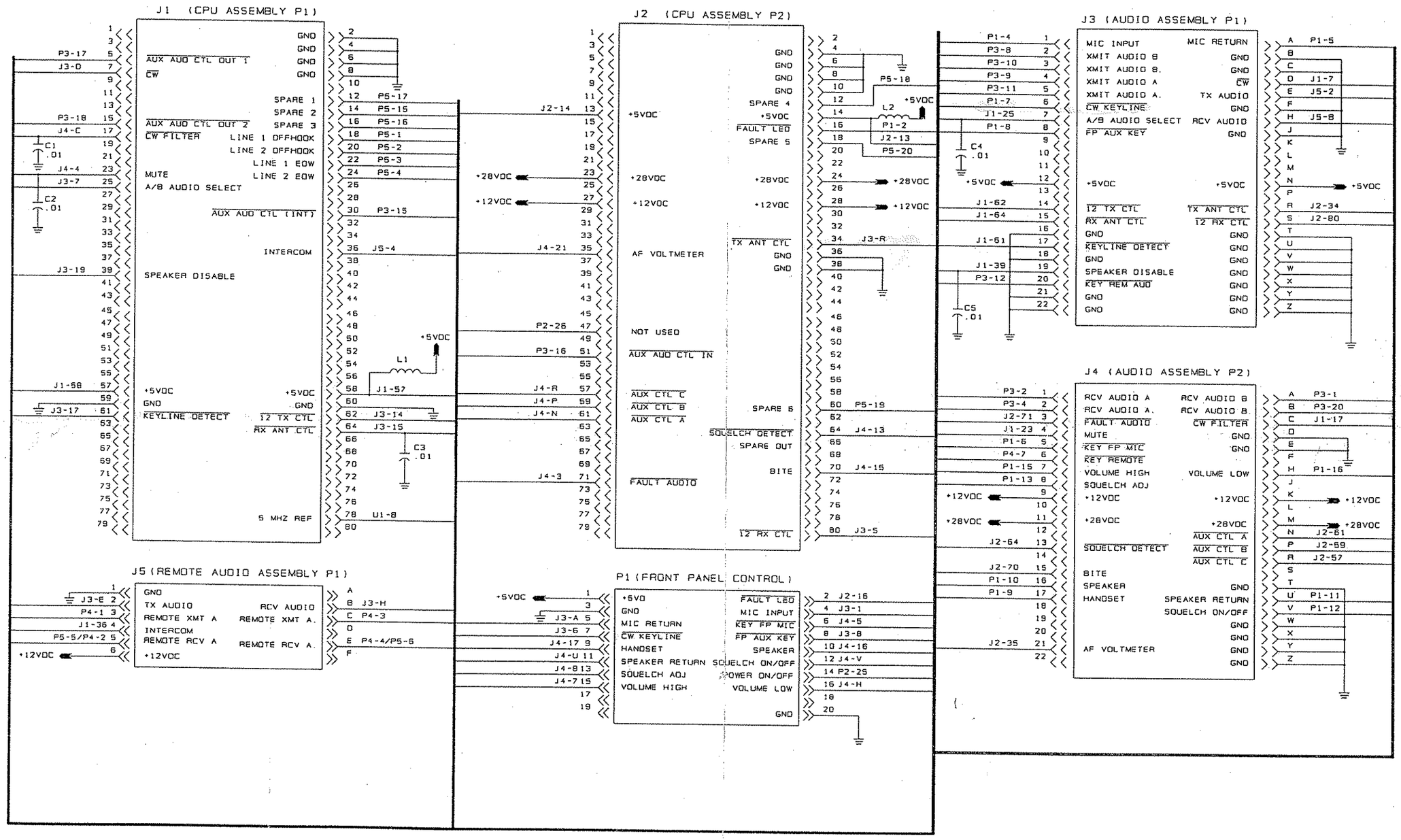

Figure 5.8.3 PC Assembly, Mother Board 3A2A5, page 3 of 4.

Pg 2-4
Fun Rear panel
Layout

B1088D

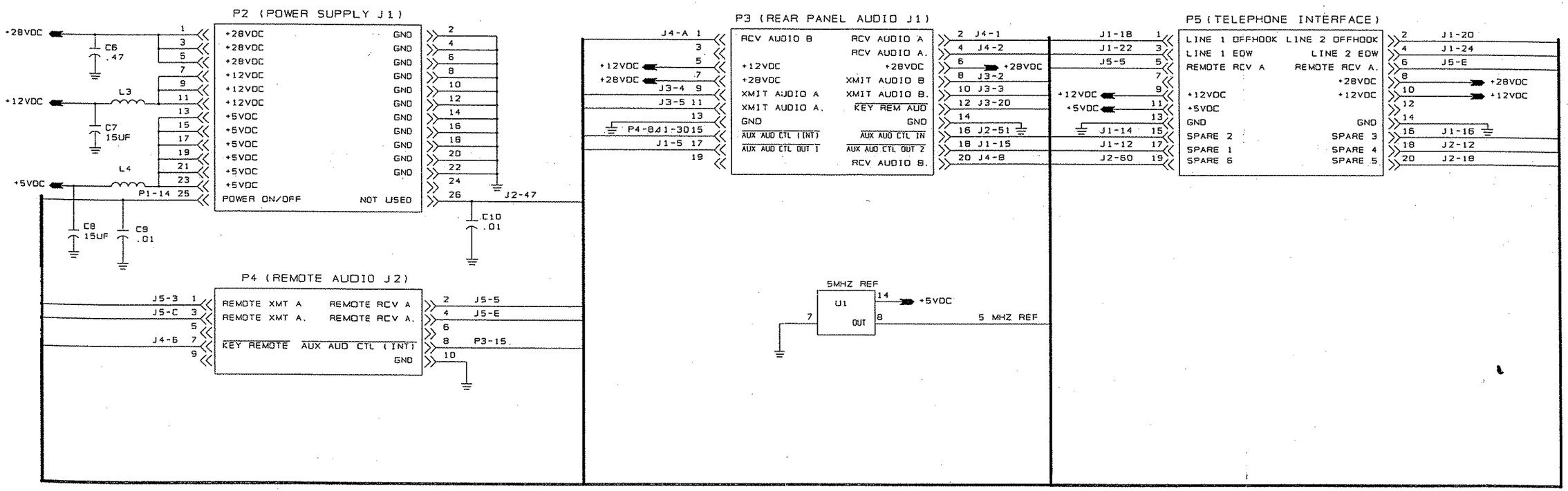

Figure 5.8.3 PC Assembly, Mother Board 3A2A5, page 4 of 4.

PC ASSY, CPU 3A2A1

	PC ASSY, CPU 3A2A1	8076070091
3A2A1A1	PC ASSY, OPTOCOUPLER	8076075092
C3	CAP. .01µF, 50V, X7R 20%	0281730008
C5	CAP. 47µF, 20V, 196D	0281700001
C8	CAP. 6.8µF, 20V, T368	0296780006
C9	CAP. .01µF, 50V, X7R 20%	0281730008
C11	CAP. 0.001µF, 100V, X7R, 20%	0281630003
C12	CAP. 68µF, 15V,	0296540005
C13	CAP. .01µF, 50V, X7R 20%	0281730008
C14	CAP. .01µF, 50V, X7R 20%	0281730008
C15	CAP. .01µF, 50V, X7R 20%	0281730008
C16	CAP. .01µF, 50V, X7R 20%	0281730008
C17	CAP. .01µF, 50V, X7R 20%	0281730008
C18	CAP. .01µF, 50V, X7R 20%	0281730008
C19	CAP. .01µF, 50V, X7R 20%	0281730008
C20	CAP. .01µF, 50V, X7R 20%	0281730008
C21	CAP. .01µF, 50V, X7R 20%	0281730008
C22	CAP. .01µF, 50V, X7R 20%	0281730008
C23	CAP. .01µF, 50V, X7R 20%	0281730008
C24	CAP. .01µF, 50V, X7R 20%	0281730008
C25	CAP. .01µF, 50V, X7R 20%	0281730008
C26	CAP. .01µF, 50V, X7R 20%	0281730008
C27	CAP. 10µF, 20V	1007290005
C28	CAP. .01µF, 50V, X7R 20%	0281730008
C29	CAP. 10µF, 20V	1007290005
C31	CAP. .01µF, 50V, X7R 20%	0281730008
C32	CAP. .01µF, 50V, X7R 20%	0281730008
C33	CAP. .01µF, 50V, X7R 20%	0281730008
C34	CAP. .01µF, 50V, X7R 20%	0281730008
C35	CAP. .01µF, 50V, X7R 20%	0281730008
C36	CAP. .01µF, 50V, X7R 20%	0281730008
C39	CAP. .01µF, 50V, X7R 20%	0281730008
C40	CAP. .01µF, 50V, X7R 20%	0281730008
C41	CAP. .01µF, 50V, X7R 20%	0281730008
C42	CAP. .01µF, 50V, X7R 20%	0281730008
C43	CAP. .01µF, 50V, X7R 20%	0281730008
C44	CAP. .01µF, 50V, X7R 20%	0281730008
C45	CAP. .01µF, 50V, X7R 20%	0281730008
C47	CAP. .01µF, 50V, X7R 20%	0281730008
C48	CAP. .01µF, 50V, X7R 20%	0281730008
C49	CAP. .01µF, 50V, X7R 20%	0281730008
C50	CAP. .01µF, 50V, X7R 20%	0281730008
C51	CAP. .01µF, 50V, X7R 20%	0281730008
C52	CAP. .01µF, 50V, X7R 20%	0281730008
C54	CAP. .01µF, 50V, X7R 20%	0281730008
C55	CAP. .01µF, 50V, X7R 20%	0281730008
C56	CAP. .01µF, 50V, X7R 20%	0281730008
C57	CAP. .01µF, 50V, X7R 20%	0281730008
C60	CAP. .01µF, 50V, X7R 20%	0281730008
C62	CAP. .01µF, 50V, X7R 20%	0281730008
C68	CAP. .01µF, 50V, X7R 20%	0281730008
C69	CAP. .01µF, 50V, X7R 20%	0281730008
C92	CAP. .01µF, 50V, X7R 20%	0281730008
C93	CAP. .01µF, 50V, X7R 20%	0281730008
C94	CAP. .01µF, 50V, X7R 20%	0281730008
C95	CAP. .01µF, 50V, X7R 20%	0281730008
C96	CAP. .01µF, 50V, X7R 20%	0281730008
C98	CAP. .01µF, 50V, X7R 20%	0281730008
C99	CAP. .01µF, 50V, X7R 20%	0281730008
C100	CAP. .01µF, 50V, X7R 20%	0281730008
C101	CAP. .01µF, 50V, X7R 20%	0281730008
C102	CAP. .01µF, 50V, X7R 20%	0281730008
C103	CAP. .01µF, 50V, X7R 20%	0281730008
C104	CAP. .01µF, 50V, X7R 20%	0281730008
C105	CAP. .01µF, 50V, X7R 20%	0281730008
C106	CAP. .01µF, 50V, X7R 20%	0281730008
C107	CAP. .01µF, 50V, X7R 20%	0281730008
C108	CAP. .01µF, 50V, X7R 20%	0281730008
C109	CAP. .01µF, 50V, X7R 20%	0281730008
C111	CAP. .01µF, 50V, X7R 20%	0281730008
C112	CAP. .01µF, 50V, X7R 20%	0281730008
C113	CAP. .01µF, 50V, X7R 20%	0281730008
C114	CAP. .01µF, 50V, X7R 20%	0281730008
C123	CAP. .01µF, 50V, X7R 20%	0281730008
C124	CAP. .01µF, 50V, X7R 20%	0281730008
C125	CAP. .01µF, 50V, X7R 20%	0281730008
C131	CAP. .01µF, 50V, X7R 20%	0281730008
C132	CAP. .01µF, 50V, X7R 20%	0281730008
C133	CAP. .01µF, 50V, X7R 20%	0281730008
C134	CAP. .01µF, 50V, X7R 20%	0281730008
C135	CAP. .01µF, 50V, X7R 20%	0281730008
C136	CAP. .01µF, 50V, X7R 20%	0281730008
C137	CAP. .01µF, 50V, X7R 20%	0281730008
C138	CAP. .01µF, 50V, X7R 20%	0281730008
C139	CAP. .01µF, 50V, X7R 20%	0281730008
C140	CAP. .01µF, 50V, X7R 20%	0281730008
C141	CAP. .01µF, 50V, X7R 20%	0281730008
C142	CAP. .01µF, 50V, X7R 20%	0281730008
C143	CAP. .01µF, 50V, X7R 20%	0281730008
C144	CAP. .01µF, 50V, X7R 20%	0281730008
C145	CAP. .01µF, 50V, X7R 20%	0281730008
C146	CAP. 3.3µF, 35V, 196D	0281680001
CR1	DIODE, SIGNAL, GERM. 1N270	0405510004
CR2	DIODE, SIGNAL, SIL. 1N4454	0405270003
CR5	DIODE, RECTIFIER 1N4004	0405180004
CR7	DIODE, LED, RED, PC MOUNT	1008480029
CR9	DIODE, TRANSIENT SUPR.TVS505	1010720007
CR10	DIODE, ZENER 1N5227B	0405250002
CR11	DIODE, SIGNAL, SIL. 1N4454	0405270003
FB1	BEAD, FERRITE .200OD,.437LG	1010910019
FB2	FERRITE BEAD, 5000 PERM	1010980017
J1	SOCKET, BOARDMOUNT, 11 PIN	1011010119
J2	SOCKET, BOARDMOUNT, 11 PIN	1011010119
J3	SOCKET, BOARDMOUNT, 11 PIN	1011010119
J4	SOCKET, BOARDMOUNT, 11 PIN	1011010119
J5	SOCKET, BOARDMOUNT, 11 PIN	1011010119
J6	SOCKET, BOARDMOUNT, 11 PIN	1011010119
J7	SOCKET, BOARDMOUNT, 11 PIN	1011010119

Figure 5.8.4 PC Assembly, CPU 3A2A1, page 1 of 8.

L1	INDUCTOR, MOLDED, 33μH, 5%	0659690004
L2	INDUCTOR, MOLDED, 33μH, 5%	0659690004
L3	INDUCTOR, MOLDED, 33μH, 5%	0659690004
L4	INDUCTOR, MOLDED, 33μH, 5%	0659690004
L5	INDUCTOR, MOLDED, 33μH, 5%	0659690004
L6	INDUCTOR, MOLDED, 33μH, 5%	0659690004
L7	INDUCTOR, MOLDED, 33μH, 5%	0659690004
L8	INDUCTOR, MOLDED, 33μH, 5%	0646300008
L9	INDUCTOR, MOLDED, 33μH, 5%	0646300008
L12	INDUCTOR, MOLDED, 33μH, 5%	0659690004
L13	INDUCTOR, MOLDED, 33μH, 5%	0659690004
L15	INDUCTOR, MOLDED, 33μH, 5%	0659690004
L16	INDUCTOR, MOLDED, 33μH, 5%	0659690004
L17	INDUCTOR, MOLDED, 33μH, 5%	0659690004
L18	INDUCTOR, MOLDED, 33μH, 5%	0646300008
P3	CONNECTOR,HEADER 40 PIN	1010780000
Q1	TRANSISTOR, NPN, SI. 2N4124	0448010003
Q2	TRANSISTOR, NPN, SI. 2N4124	0448010003
R3	RESISTOR 1K, 10%, 1/4W	0171560001
R5	RESISTOR 470, 5%, 1/4W	0184110009
R6	RESISTOR 10K, 10%, 1/4W	0170410005
R12	RESISTOR 22K, 10%, 1/4W	0172230004
R13	RESISTOR 10K, 10%, 1/4W	0170410005
R14	RESISTOR 10, 5%, 1/4W	0177160004
R15	RESISTOR 1M, 10%, 1/4W	0170650006
R16	RESISTOR 3.9K, 10%, 1/4W	0178830003
R18	RESISTOR 220, 10%, 1/4W	0171320000
R21	RESISTOR 4.7K, 5%, 1/4W	0170770001
R22	RESISTOR 5.1 1K, 1%, 1/8W	1003120016
R23	RESISTOR 28K 1%, 1/8W	1004050038
R40	RESISTOR 1.91K 1%, 1/8W	1008530018
R41	RESISTOR 6.81K, 1%, 1/8W	0196350000
R42	RESISTOR 1.91K 1%, 1/8W	1008530018
R43	RESISTOR 6.81K, 1%, 1/8W	0196350000
R46	RESISTOR 10K, 1%, 1/8W	1003050026
R47	RESISTOR 10K, 1%, 1/8W	1003050026
R54	RESISTOR 10K, 10%, 1/4W	0170410005
R55	RESISTOR 470, 5%, 1/4W	0184110009
R56	RESISTOR 15, 10%, 1/4W	0181740001
R79	RESISTOR 10K, 10%, 1/4W	0170410005
R80	RESISTOR 10K, 10%, 1/4W	0170410005
R81	RESISTOR 22K, 5%, 1/4W	0172230004
R88	RESISTOR 5.11K, 1%, 1/8W	1003120016
R89	RESISTOR 5.11K, 1%, 1/8W	1003120016
R90	RESISTOR 2.2K, 5%, 1/4W	0178070009
R91	RESISTOR 2.2K, 5%, 1/4W	0178070009
R92	RESISTOR 2.2K, 5%, 1/4W	0178070009
R93	RESISTOR 2.2K, 5%, 1/4W	0178070009
R94	RESISTOR 2.2K, 5%, 1/4W	0178070009
R95	RESISTOR 2.2K, 5%, 1/4W	0178070009
R96	RESISTOR 2.2K, 5%, 1/4W	0178070009
R97	RESISTOR 10K, 10%, 1/4W	0170410005
R98	RESISTOR 680, 10%, 1/4W	0176630007
R99	RESISTOR 10K, 10%, 1/4W	0170410005
R100	RESISTOR 1.91K 1%, 1/8W	1008530018

R101	RESISTOR 6.81K, 1%, 1/8W	0196350000
R102	RESISTOR 7.87K 1%, 1/8W	1004090021
R103	RESISTOR 6.81K, 1%, 1/8W	0196350000
R104	RESISTOR 1K, 10%, 1/4W	0171560001
R105	RESISTOR 22K, 5%, 1/4W	0172230004
RP1	RES NTWK 10 PIN SIP 10K COM	1006130021
RP2	RES NTWK 10 PIN SIP 10K COM	1006130021
RP3	RES NTWK 10 PIN SIP 10K COM	1006130021
RP4	RES NTWK 10 PIN SIP 10K COM	1006130021
RP5	RES NTWK 10 PIN SIP 10K COM	1006130021
RP7	RES NTWK 10 PIN SIP 10K COM	1006130021
RP8	RES NTWK 10 PIN SIP 10K COM	1006130021
RP9	RES NTWK 10 PIN SIP 22K COM	1006570012
RP13	RES NTWK 10 PIN SIP 10K COM	1006130021
RP18	RES NTWK 10 PIN SIP 10K COM	1006130021
RP19	RES NTWK 10 PIN SIP 10K COM	1006130021
S1	SWITCH, SPST, ROCKER DIP	1010210025
S2	SWITCH, PUSHBUTTON,SPST	1010710001
U2	IC. DIGITAL 80C85A	1007400013
U3	IC. DIGITAL RAM 6264	1010650009
U4	IC. DIGITAL 74HC244	1006460039
U5	IC. DIGITAL 74HC245	1006470034
U6	IC. DIGITAL 74HC244	1006460039
U7	IC. DIGITAL 74HC373	1006480030
U8	IC. DIGITAL 28C64	1010660004
U9	IC. DIGITAL 74HC139	1006770038
U10	IC. DIGITAL 74HC244	1006460039
U11	IC. DIGITAL 74HC244	1006460039
U12	IC. DIGITAL 74HC374	1006450033
U13	EPROM W/RCU-9310 SOFTWARE	8078073291
U14	EPROM W/RCU-9310 SOFTWARE	8078072295
U15	IC. DIGITAL 74HC00	1008190004
U16	IC. DIGITAL 74HC08	1006490019
U17	IC. DIGITAL ADC0804	1010670000
U18	IC. DIGITAL 74HC374	1006450033
U19	IC. LINEAR LM358	1010680005
U22	IC. DIGITAL 74HC245	1006470034
U23	IC. DIGITAL 74HC244	1006460039
U24	IC. DIGITAL 4067B	1006800034
U25	IC. DIGITAL 74HC244	1006460039
U28	IC DIGITAL 74HC154	1010160028
U29	IC DIGITAL 74HC154	1010160028
U30	IC. DIGITAL 74HC138	1006480013
U32	IC. DIGITAL 74HC374	1006450033
U33	IC. DIGITAL 74HC374	1006450033
U34	IC. DIGITAL 7417	1003870007
U35	IC. DIGITAL 74HC374	1006450033
U36	IC. DIGITAL 74HC374	1006450033
U39	IC. DIGITAL 74HC374	1006450033
U41	IC. DIGITAL 74HC374	1006450033
U42	IC. DIGITAL 74HC374	1006450033
U45	IC. DIGITAL 74HC14	1006490027
U46	IC. DIGITAL 74HC244	1006460039
U47	IC. DIGITAL 74HC14	1006490027

NOTE: U13/U14 are not part of this PC Assembly.

Figure 5.8.4 PC Assembly, CPU 3A2A1, page 2 of 8.

U48	IC. LINEAR	556C/3456	1005620032
U49	IC. DIGITAL	74HC14	1006490027
U50	IC. DIGITAL	8259A	1006800018
U51	IC. DIGITAL	74HC244	1006460039
U53	IC. DIGITAL	74HC244	1006460039
U54	IC. DIGITAL	74HC374	1006450033
U55	IC. DIGITAL	74HC244	1006460039
U56	IC. DIGITAL	74HC08	1006490019
U58	IC. DIGITAL	74HC14	1006490027
U59	IC. DIGITAL	74HC374	1006450033
U60	IC. DIGITAL	74HC192	1010690001
U61	IC. DIGITAL	74HC74	1008000019
U67	IC. DIGITAL	74HC139	1006770038
U75	IC. DIGITAL	5369 REPL.	1010700006
U77	IC. DIGITAL	2501-4	1010630008
U100	IC. DIGITAL	2501-4	1010630008
U107	IC. DIGITAL	74HC244	1006460039
XU2	SOCKET, IC, 40 PIN TAILLESS		1006620010
XU3	SOCKET, IC, 28 PIN TAILLESS		1006620001
XU8	SOCKET, IC, 28 PIN TAILLESS		1006620001
XU13	SOCKET, IC, 28 PIN TAILLESS		1006620001
XU14	SOCKET, IC, 28 PIN TAILLESS		1006620001
	MOUNTING PLATE, CPU		8076070805

Figure 5.8.4 PC Assembly, CPU 3A2A1, page 3 of 8.

NOTE: NORMAL SETTING FOR S1: SEGMENTS 1 THRU 8, ALL SEGMENTS DEPRESSED TO NUMBERED END.

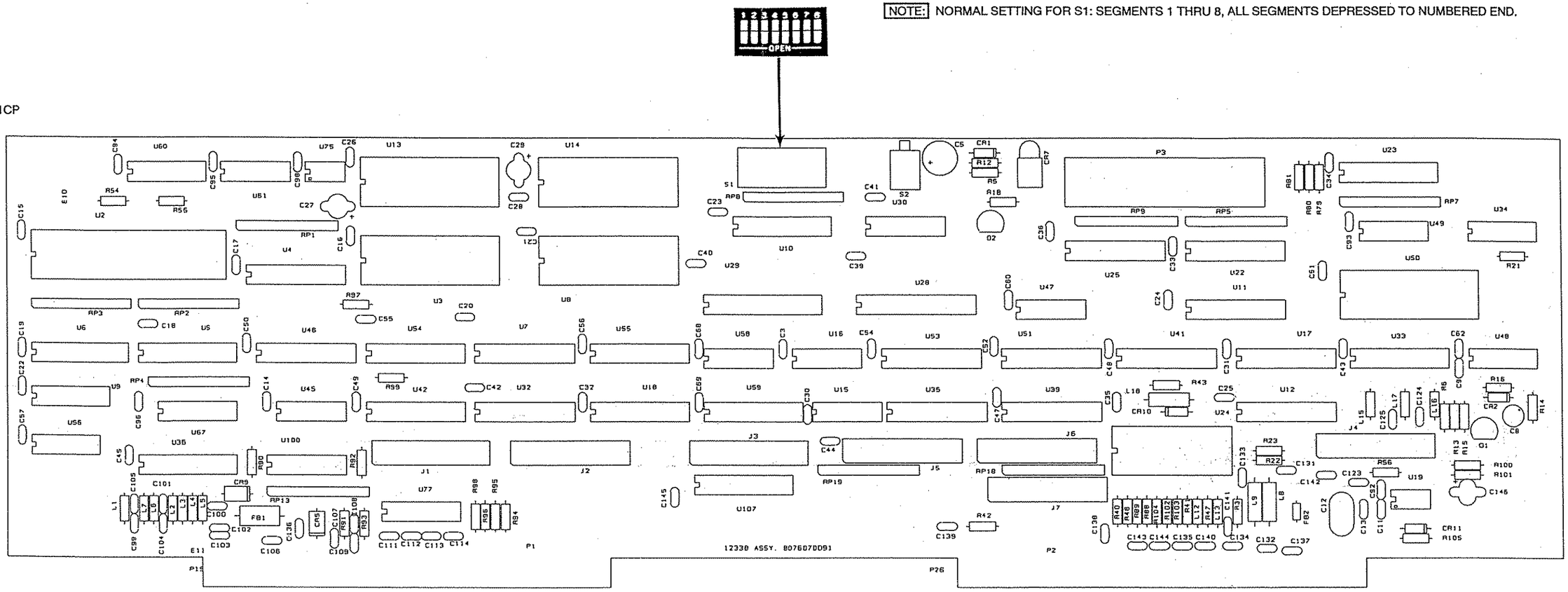

Figure 5.8.4 PC Assembly, CPU 3A2A1, page 4 of 8.

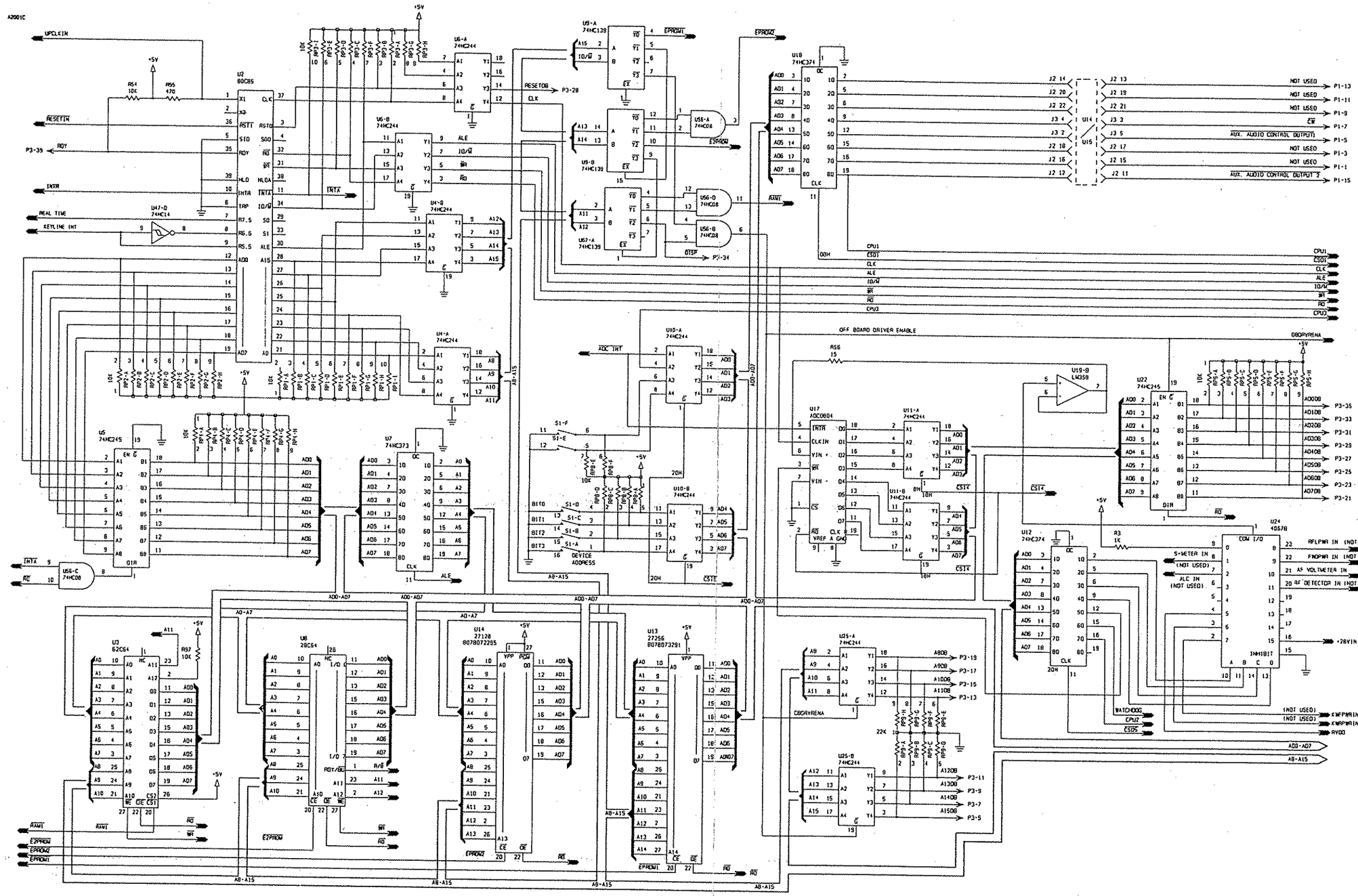

Figure 5.8.4 PC Assembly, CPU 3A2A1, page 5 of 8.

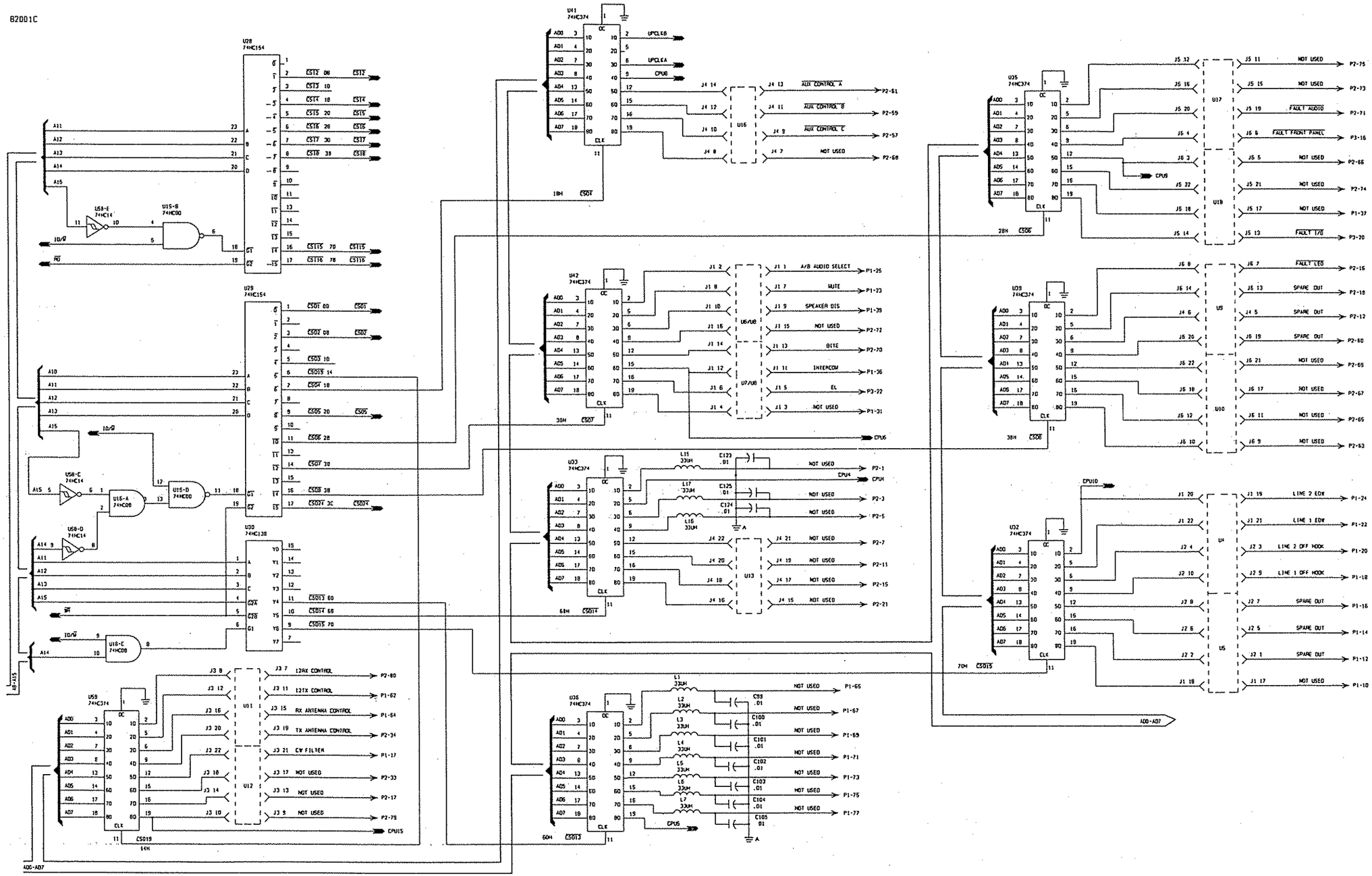

Figure 5.8.4 PC Assembly, CPU 3A2A1, page 6 of 8.

C2001C

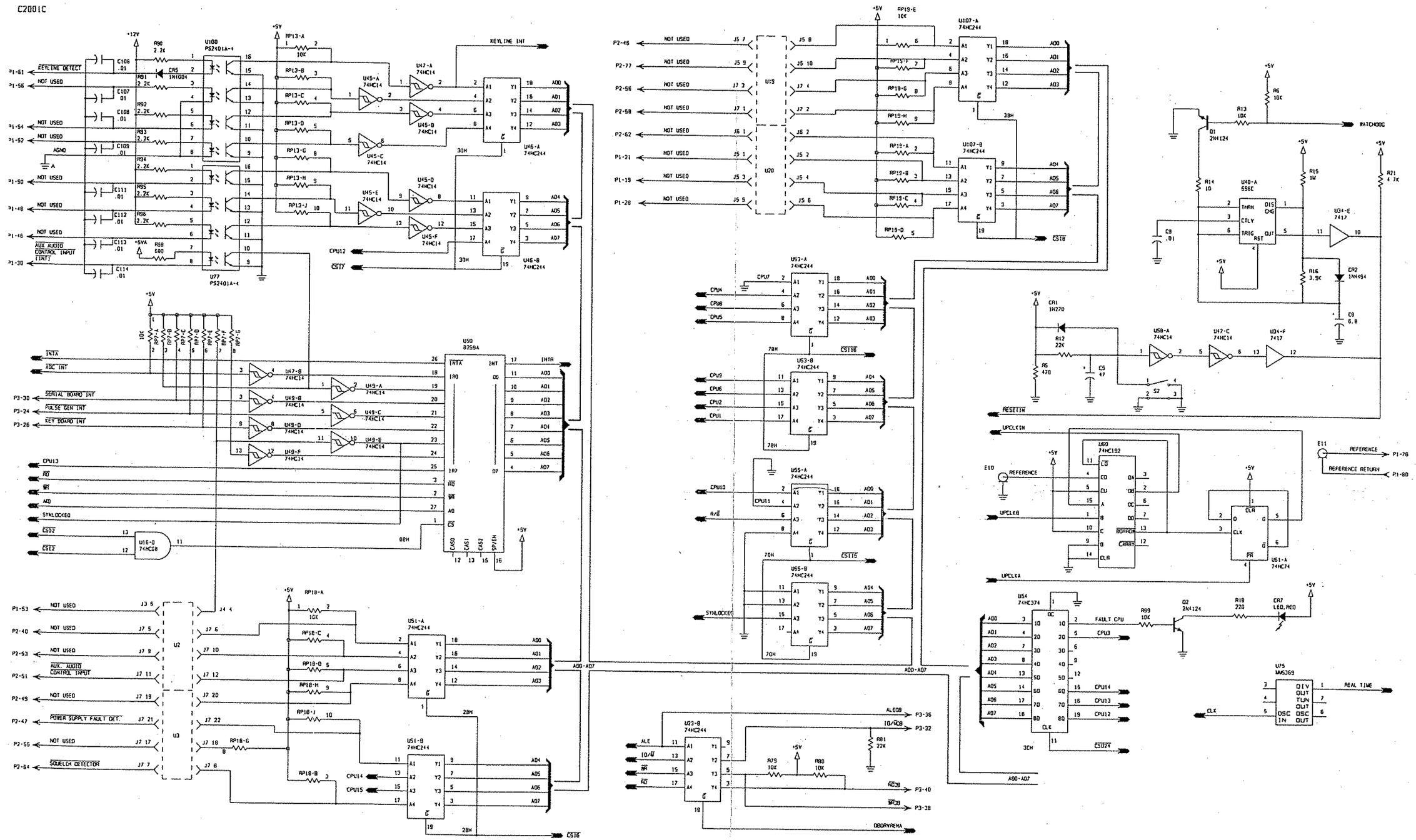

Figure 5.8.4 PC Assembly, CPU 3A2A1, page 7 of 8.

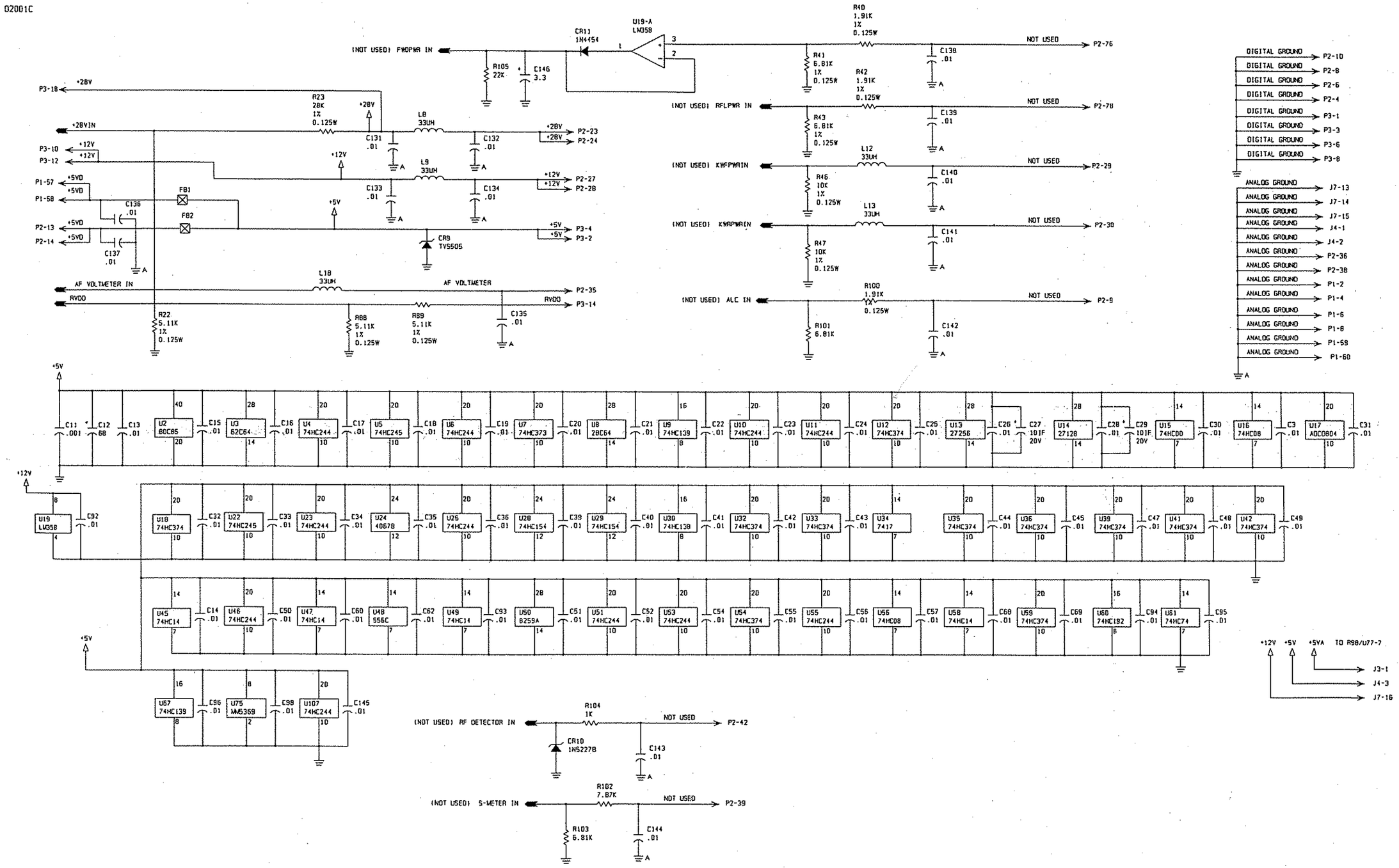

Figure 5.8.4 PC Assembly, CPU 3A2A1, page 8 of 8.

PC ASSY, OPTOCOUPLER 3A2A1A1

	PC ASSY, OPTOCOUPLER 3A2A1A1	8076075092
C1	CAP. .47µF, 50V, X7R 20%	0283377771
C2	CAP. 1µF, 35V, T368	0283630001
C3	CAP. .01µF, 50V, X7R 20%	0281730008
C4	CAP. .01µF, 50V, X7R 20%	0281730008
C5	CAP. .01µF, 50V, X7R 20%	0281730008
C6	CAP. .01µF, 50V, X7R 20%	0281730008
C7	CAP. .01µF, 50V, X7R 20%	0281730008
C8	CAP. .01µF, 50V, X7R 20%	0281730008
C9	CAP. .01µF, 50V, X7R 20%	0281730008
C10	CAP. .01µF, 50V, X7R 20%	0281730008
C11	CAP. .01µF, 50V, X7R 20%	0281730008
C12	CAP. .01µF, 50V, X7R 20%	0281730008
C13	CAP. .01µF, 50V, X7R 20%	0281730008
C14	CAP. .01µF, 50V, X7R 20%	0281730008
C15	CAP. .01µF, 50V, X7R 20%	0281730008
C16	CAP. .01µF, 50V, X7R 20%	0281730008
C17	CAP. .01µF, 50V, X7R 20%	0281730008
C18	CAP. .01µF, 50V, X7R 20%	0281730008
C19	CAP. .01µF, 50V, X7R 20%	0281730008
C20	CAP. .01µF, 50V, X7R 20%	0281730008
C21	CAP. .01µF, 50V, X7R 20%	0281730008
C22	CAP. .01µF, 50V, X7R 20%	0281730008
C23	CAP. .01µF, 50V, X7R 20%	0281730008
C24	CAP. .01µF, 50V, X7R 20%	0281730008
C25	CAP. .01µF, 50V, X7R 20%	0281730008
C26	CAP. .01µF, 50V, X7R 20%	0281730008
C27	CAP. .01µF, 50V, X7R 20%	0281730008
C28	CAP. .01µF, 50V, X7R 20%	0281730008
C29	CAP. .01µF, 50V, X7R 20%	0281730008
C30	CAP. .01µF, 50V, X7R 20%	0281730008
C31	CAP. .01µF, 50V, X7R 20%	0281730008
C32	CAP. .01µF, 50V, X7R 20%	0281730008
C33	CAP. .01µF, 50V, X7R 20%	0281730008
C34	CAP. .01µF, 50V, X7R 20%	0281730008
C35	CAP. .01µF, 50V, X7R 20%	0281730008
C36	CAP. .01µF, 50V, X7R 20%	0281730008
C37	CAP. .01µF, 50V, X7R 20%	0281730008
C38	CAP. .01µF, 50V, X7R 20%	0281730008
C39	CAP. .01µF, 50V, X7R 20%	0281730008
C40	CAP. .01µF, 50V, X7R 20%	0281730008
C41	CAP. .01µF, 50V, X7R 20%	0281730008
C42	CAP. .01µF, 50V, X7R 20%	0281730008
C43	CAP. .01µF, 50V, X7R 20%	0281730008
C44	CAP. .01µF, 50V, X7R 20%	0281730008
C45	CAP. .01µF, 50V, X7R 20%	0281730008
C46	CAP. .01µF, 50V, X7R 20%	0281730008
C47	CAP. .01µF, 50V, X7R 20%	0281730008
C48	CAP. .01µF, 50V, X7R 20%	0281730008
C49	CAP. .01µF, 50V, X7R 20%	0281730008
C50	CAP. .01µF, 50V, X7R 20%	0281730008
C51	CAP. .01µF, 50V, X7R 20%	0281730008
C52	CAP. .01µF, 50V, X7R 20%	0281730008
C53	CAP. .01µF, 50V, X7R 20%	0281730008
C54	CAP. .01µF, 50V, X7R 20%	0281730008
C55	CAP. .01µF, 50V, X7R 20%	0281730008
C56	CAP. .01µF, 50V, X7R 20%	0281730008
C57	CAP. .01µF, 50V, X7R 20%	0281730008
C58	CAP. .01µF, 50V, X7R 20%	0281730008
C59	CAP. .01µF, 50V, X7R 20%	0281730008
C60	CAP. .01µF, 50V, X7R 20%	0281730008
C61	CAP. .01µF, 50V, X7R 20%	0281730008
C62	CAP. .01µF, 50V, X7R 20%	0281730008
C63	CAP. .01µF, 50V, X7R 20%	0281730008
C64	CAP. .01µF, 50V, X7R 20%	0281730008
C65	CAP. .01µF, 50V, X7R 20%	0281730008
C66	CAP. .01µF, 50V, X7R 20%	0281730008
C67	CAP. .01µF, 50V, X7R 20%	0281730008
C68	CAP. .01µF, 50V, X7R 20%	0281730008
C69	CAP. .01µF, 50V, X7R 20%	0281730008
C70	CAP. .01µF, 50V, X7R 20%	0281730008
C71	CAP. .01µF, 50V, X7R 20%	0281730008
C72	CAP. .01µF, 50V, X7R 20%	0281730008
C73	CAP. .01µF, 50V, X7R 20%	0281730008
C74	CAP. .01µF, 50V, X7R 20%	0281730008
C75	CAP. .01µF, 50V, X7R 20%	0281730008
C76	CAP. .01µF, 50V, X7R 20%	0281730008
C77	CAP. .01µF, 50V, X7R 20%	0281730008
C78	CAP. .01µF, 50V, X7R 20%	0281730008
C79	CAP. .01µF, 50V, X7R 20%	0281730008
C80	CAP. .01µF, 50V, X7R 20%	0281730008
C81	CAP. .01µF, 50V, X7R 20%	0281730008
J1	HEADER, PIN STRIP, 22 PIN	1010930010
J2	HEADER, PIN STRIP, 22 PIN	1010930010
J3	HEADER, PIN STRIP, 22 PIN	1010930010
J4	HEADER, PIN STRIP, 22 PIN	1010930010
J5	HEADER, PIN STRIP, 22 PIN	1010930010
J6	HEADER, PIN STRIP, 22 PIN	1010930010
J7	HEADER, PIN STRIP, 22 PIN	1010930010
RP1	RES NTWK 10 PIN SIP 680 COM	1010640003
RP2	RES NTWK 10 PIN SIP 680 COM	1010640003
RP3	RES NTWK 10 PIN SIP 680 COM	1010640003
RP4	RES NTWK 10 PIN SIP 680 COM	1010640003
RP5	RES NTWK 10 PIN SIP 680 COM	1010640003
RP6	RES NTWK 10 PIN SIP 680 COM	1010640003
RP7	RES NTWK 10 PIN SIP 680 COM	1010640003
RP8	RES NTWK 10 PIN SIP 680 COM	1010640003
RP9	RES NTWK 10 PIN SIP 680 COM	1010640003
RP10	RES NTWK 10 PIN SIP 680 COM	1010640003
RP11	RES NTWK 10 PIN SIP 10K COM	1006130021
U1	IC. LINEAR LM340T5	0448600005
U2	IC. DIGITAL 2501-4	1010630008
U3	IC. DIGITAL 2501-4	1010630008
U4	IC. DIGITAL 2501-4	1010630008
U5	IC. DIGITAL 2501-4	1010630008
U6	IC. DIGITAL 2501-4	1010630008
U7	IC. DIGITAL 2501-4	1010630008
U8	IC. DIGITAL UDN-2981	1006330038

Figure 5.8.5 PC Assembly, OPTOCOUPLER, 3A2A1A1, page 1 of 3.

U9	IC. DIGITAL	2501-4	1010630008
U10	IC. DIGITAL	2501-4	1010630008
U11	IC. DIGITAL	2501-4	1010630008
U12	IC. DIGITAL	2501-4	1010630008
U13	IC. DIGITAL	2501-4	1010630008
U14	IC. DIGITAL	2501-4	1010630008
U15	IC. DIGITAL	2501-4	1010630008
U16	IC. DIGITAL	2501-4	1010630008
U17	IC. DIGITAL	2501-4	1010630008
U18	IC. DIGITAL	2501-4	1010630008
U19	IC. DIGITAL	2501-4	1010630008
U20	IC. DIGITAL	2501-4	1010630008

1151BP

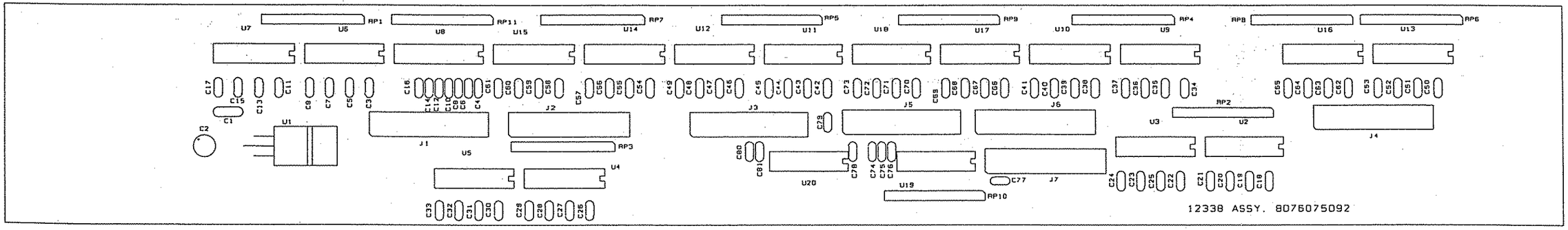

Figure 5.8.5 PC Assembly, OPTOCOUPLER, 3A2A1A1, page 2 of 3.

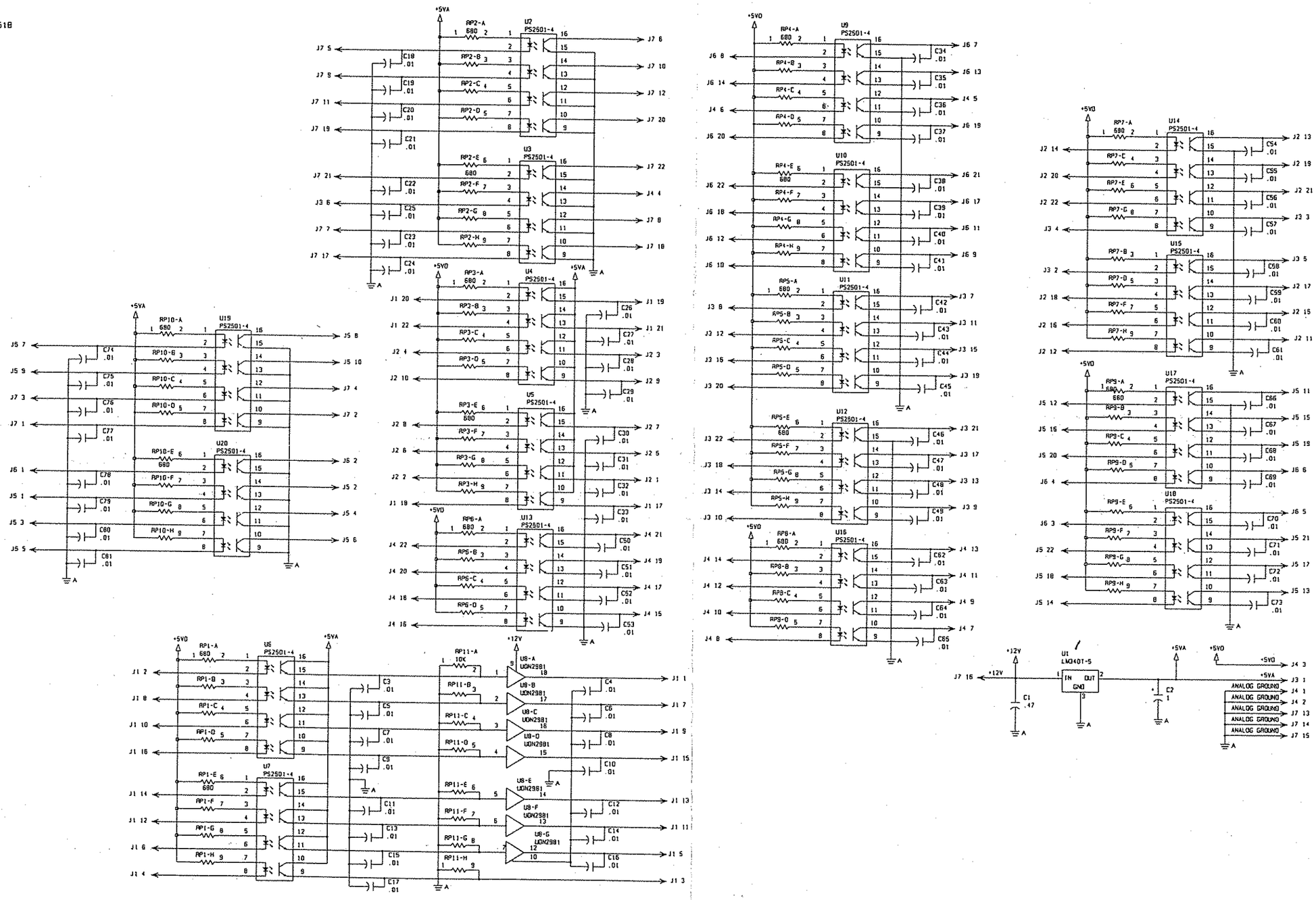

Figure 5.8.5 PC Assembly, OPTOCOUPLER, 3A2A1A1, page 3 of 3.

PC ASSY, AUDIO 3A2A2

	PC ASSY, AUDIO 3A2A2	8076090091
C1	CAP. 6.8μF, 20V, T368	0296780006
C2	CAP. .01μF, 50V, X7R 20%	0281730008
C3	CAP. .01μF, 50V, X7R 20%	0281730008
C4	CAP. .01μF, 50V, X7R 20%	0281730008
C5	CAP. .01μF, 50V, X7R 20%	0281730008
C6	CAP. 1μF, 35V, 196D	0281660000
C7	CAP. 1μF, 35V, 196D	0281660000
C8	CAP. 1μF, 35V, 196D	0281660000
C9	CAP. 1μF, 35V, 196D	0281660000
C10	CAP. 1μF, 35V, 196D	0281660000
C11	CAP. 1μF, 35V, 196D	0281660000
C12	CAP. 22μF, 15V, T368	0296660001
C13	CAP. 3.3μF, 35V, 196D	0281680001
C14	CAP. 1μF, 35V, 196D	0281660000
C15	CAP. 2.2μF, 35V, T368	0273950002
C16	CAP. 6.8μF, 20V, T368	0296780006
C17	CAP. 22μF, 15V, T368	0296660001
C18	CAP. 150PF, 500V, DM15, 5%	0274980002
C19	CAP. 3.3μF, 35V, 196D	0281680001
C20	CAP. 1μF, 35V, 196D	0281660000
C21	CAP. 2.2μF, 35V, T368	0273950002
C22	CAP. 0.1μF, 50V, X7R	1011180014
C23	CAP. 1μF, 35V, 196D	0281660000
C24	CAP. 0.1μF, 50V, X7R	1011180014
C25	CAP. 0.1μF, 50V, X7R	1011180014
C26	CAP. .47μF, 50V, X7R 20%	0283377771
C27	CAP. 1μF, 35V, 196D	0281660000
C28	CAP. 0.0068μF, 100V, NPO, 5%	1011450020
C29	CAP. 0.0068μF, 100V, NPO, 5%	1011450020
C30	CAP. 22μF, 15V, T368	0296660001
C32	CAP. .01μF, 50V, X7R 20%	0281730008
C34	CAP. 2.2μF, 35V, T368	0273950002
C35	CAP. .01μF, 50V, X7R 20%	0281730008
C36	CAP. .01μF, 50V, X7R 20%	0281730008
C37	CAP. 2.2μF, 35V, T368	0273950002
C38	CAP. .01μF, 50V, X7R 20%	0281730008
C39	CAP. .01μF, 50V, X7R 20%	0281730008
C40	CAP. 2.2μF, 35V, T368	0273950002
C41	CAP. .01μF, 50V, X7R 20%	0281730008
C42	CAP. .01μF, 50V, X7R 20%	0281730008
C43	CAP. 22μF, 15V, T368	0296660001
C44	CAP. 1μF, 35V, 196D	0281660000
C45	CAP. .47μF, 50V, X7R 20%	0283377771
C46	CAP. 22μF, 15V, T368	0296660001
C47	CAP. .01μF, 50V, X7R 20%	0281730008
C48	CAP. .033μF, 50V,10/20%	0281770000
C49	CAP. .033μF, 50V,10/20%	0281770000
C50	CAP. .01μF, 50V, X7R 20%	0281730008
C51	CAP. .47μF, 50V, X7R 20%	0283377771
C52	CAP. .033μF, 50V,10/20%	0281770000
C53	CAP. 2.2μF, 35V, T368	0273950002
C54	CAP. 22μF, 15V, T368	0296660001
C55	CAP. .47μF, 50V, X7R 20%	0283377771
C56	CAP. 0.001μF, 100V, X7R, 20%	0281630003
C57	CAP. 22μF, 15V, T368	0296660001
C58	CAP. .47μF, 50V, X7R 20%	0283377771
C60	CAP. 47μF, 35V	0282190007
C61	CAP. 0.1μF, 50V, X7R	1011180014
C62	CAP. .47μF, 50V, X7R 20%	0283377771
C64	CAP. 470μF, 50V, TAL	0280890001
C65	CAP. 1μF, 35V, 196D	0281660000
C66	CAP. 22μF, 15V, T368	0296660001
C67	CAP. 22μF, 15V, T368	0296660001
C68	CAP. 820PF, 300V, DM15, 5%	0288750004
C69	CAP. .01μF, 50V, X7R 20%	0281730008
C70	CAP. 22μF, 15V, T368	0296660001
C71	CAP. 0.1μF, 50V, X7R	1011180014
C72	CAP. 22μF, 15V, T368	0296660001
C73	CAP. 22μF, 15V, T368	0296660001
C74	CAP. 0.1μF, 50V, X7R	1011180014
C75	CAP. 0.1μF, 50V, X7R	1011180014
C76	CAP. 0.1μF, 50V, X7R	1011180014
C77	CAP. 0.1μF, 50V, X7R	1011180014
C78	CAP. 0.1μF, 50V, X7R	1011180014
C79	CAP. 0.1μF, 50V, X7R	1011180014
C80	CAP. 0.1μF, 50V, X7R	1011180014
C81	CAP. 0.1μF, 50V, X7R	1011180014
C82	CAP. 22μF, 15V, T368	0296660001
C85	CAP. .01μF, 50V, X7R 20%	0281730008
C86	CAP. .01μF, 50V, X7R 20%	0281730008
C87	CAP. .01μF, 50V, X7R 20%	0281730008
C88	CAP. .01μF, 50V, X7R 20%	0281730008
C89	CAP. 0.1μF, 50V, X7R	1011180014
C90	CAP. .01μF, 50V, X7R 20%	0281730008
C91	CAP. 0.1μF, 50V, X7R	1011180014
C92	CAP. 0.1μF, 50V, X7R	1011180014
C93	CAP. 0.1μF, 50V, X7R	1011180014
C94	CAP. .01μF, 50V, X7R 20%	0281730008
C95	CAP. .01μF, 50V, X7R 20%	0281730008
C96	CAP. 0.1μF, 50V, X7R	1011180014
C97	CAP. 0.1μF, 50V, X7R	1011180014
C98	CAP. 0.1μF, 50V, X7R	1011180014
C99	CAP. 0.1μF, 50V, X7R	1011180014
C100	CAP. .01μF, 50V, X7R 20%	0281730008
C101	CAP. .01μF, 50V, X7R 20%	0281730008
C102	CAP. 0.1μF, 50V, X7R	1011180014
C103	CAP. 0.1μF, 50V, X7R	1011180014
C104	CAP. .01μF, 50V, X7R 20%	0281730008
C105	CAP. .01μF, 50V, X7R 20%	0281730008
C106	CAP. .01μF, 50V, X7R 20%	0281730008
C107	CAP. .01μF, 50V, X7R 20%	0281730008
C108	CAP. 6.8μF, 20V, T368	0296780006
C109	CAP. .47μF, 50V, X7R 20%	0283377771
C110	CAP. 6.8μF, 20V, T368	0296780006
C111	CAP. .01μF, 50V, X7R 20%	0281730008

Figure 5.8.6 PC Assembly, Audio 3A2A2, page 1 of 9.

C112	CAP. .01µF, 50V, X7R 20%	0281730008
C113	CAP. 15µF, 35V	0282240004
C114	CAP. 0.1µF, 50V, X7R	1011180014
C115	CAP. 0.1µF, 50V, X7R	1011180014
C116	CAP. 0.1µF, 50V, X7R	1011180014
C117	CAP. 0.1µF, 50V, X7R	1011180014
C118	CAP. 1µF, 35V, 196D	0281660000
C119	CAP. 1µF, 35V, 196D	0281660000
C120	CAP. 6.8µF, 20V, T368	0296780006
C121	CAP. 0.1µF, 50V, X7R	1011180014
C122	CAP. 6.8µF, 20V, T368	0296780006
C123	CAP. 6.8µF, 20V, T368	0296780006
C124	CAP. 0.1µF, 50V, X7R	1011180014
C125	CAP. 0.1µF, 50V, X7R	1011180014
C126	CAP. 0.1µF, 50V, X7R	1011180014
C127	CAP. .47µF, 50V, X7R 20%	0283377771
C128	CAP. 0.1µF, 50V, X7R	1011180014
C129	CAP. 0.001µF, 100V, X7R, 20%	0281630003
C130	CAP. .02µF, 25V, Y5U/Y5P	0269130004
C131	CAP. .47µF, 50V, X7R 20%	0283377771
C132	CAP. 47µF, 35V	0282190007
C133	CAP. 15µF, 35V	0282240004
C134	CAP. 2.2µF, 35V, T368	0273950002
C135	CAP. .01µF, 50V, X7R 20%	0281730008
C136	CAP. .01µF, 50V, X7R 20%	0281730008
C137	CAP. .01µF, 50V, X7R 20%	0281730008
C138	CAP. .01µF, 50V, X7R 20%	0281730008
C139	CAP. 390PF, 500V, DM15, 2%	0281040001
C140	CAP. .01µF, 50V, X7R 20%	0281730008
C141	CAP. .01µF, 50V, X7R 20%	0281730008
C142	CAP. .01µF, 50V, X7R 20%	0281730008
C143	CAP. 22µF, 15V, T368	0296660001
C144	CAP. .01µF, 50V, X7R 20%	0281730008
C145	CAP. .47µF, 50V, X7R 20%	0283377771
CR1	DIODE, RECTIFIER 1N4004	0405180004
CR2	DIODE, SIGNAL, SIL. 1N4454	0405270003
CR3	DIODE, SIGNAL, SIL. 1N4454	0405270003
CR4	DIODE, SIGNAL, SIL. 1N4454	0405270003
CR5	DIODE, RECTIFIER 1N4004	0405180004
CR6	DIODE, SIGNAL, SIL. 1N4454	0405270003
CR7	DIODE, SIGNAL, SIL. 1N4454	0405270003
CR8	DIODE, SIGNAL, SIL. 1N4454	0405270003
CR9	DIODE, SIGNAL, SIL. 1N4454	0405270003
CR10	DIODE, RECTIFIER 1N4004	0405180004
CR11	DIODE, RECTIFIER 1N4004	0405180004
CR12	DIODE, RECTIFIER 1N4004	0405180004
CR13	DIODE, RECTIFIER 1N4004	0405180004
CR14	DIODE, SIGNAL, SIL. 1N4454	0405270003
CR15	DIODE, SIGNAL, SIL. 1N4454	0405270003
CR16	DIODE, RECTIFIER 1N4004	0405180004
CR17	DIODE, LED, RED, PC MOUNT	1008480029
CR18	DIODE, RECTIFIER 1N4004	0405180004
CR19	DIODE, RECTIFIER 1N4004	0405180004
CR20	DIODE, RECTIFIER 1N4004	0405180004

CR21	DIODE, RECTIFIER 1N4004	0405180004
CR22	DIODE, RECTIFIER 1N4004	0405180004
CR23	DIODE, RECTIFIER 1N4004	0405180004
CR24	DIODE, SIGNAL, SIL. 1N4454	0405270003
CR25	DIODE, SIGNAL, SIL. 1N4454	0405270003
CR28	DIODE, RECTIFIER 1N4004	0405180004
CR29	DIODE, SIGNAL, SIL. 1N4454	0405270003
CR30	DIODE, RECTIFIER 1N4004	0405180004
CR31	DIODE, SIGNAL, SIL. 1N4454	0405270003
CR32	DIODE, RECTIFIER 1N4004	0405180004
CR33	DIODE, RECTIFIER 1N4004	0405180004
CR34	DIODE, RECTIFIER 1N4004	0405180004
CR35	DIODE, SIGNAL, SIL. 1N4454	0405270003
CR36	DIODE, SIGNAL, SIL. 1N4454	0405270003
J1	SOCKET, BOARDMOUNT, 12 PIN	1011010127
K1	RELAY, DPDT, 12VDC	1005090009
K2	RELAY, DPDT, 12VDC	1005090009
K3	RELAY, DPDT, 12VDC	1005090009
Q1	TRANSISTOR, NPN, SI. 2N4124	0448010003
Q2	TRANSISTOR, P-CH, FET J175	1010840002
Q3	TRANSISTOR, N-CH, FET MTP3055E	1010750011
Q4	TRANSISTOR, NPN, SI. 2N4124	0448010003
Q5	TRANSISTOR, NPN, SI. 2N4124	0448010003
Q6	TRANSISTOR, NPN, SI. 2N2222A	0448580004
Q7	TRANSISTOR, NPN, SI. 2N2222A	0448580004
R1	RESISTOR 100K, 5%, 1/8W	1010801040
R2	RESISTOR 10K, 5%, 1/8W	1010801031
R3	RESISTOR 47K, 5%, 1/8W	1010804731
R4	RESISTOR 10K, 5%, 1/8W	1010801031
R5	RESISTOR 47K, 5%, 1/8W	1010804731
R6	RESISTOR 10K, 5%, 1/8W	1010801031
R7	RESISTOR 68K, 5%, 1/8W	1010806831
R8	POT. 1K, 10% 3/4W, 15 TURNS	0338490019
R9	RESISTOR 4.7K, 5%, 1/8W	1010804723
R10	RESISTOR 10K, 5%, 1/8W	1010801031
R11	RESISTOR 10K, 5%, 1/8W	1010801031
R12	RESISTOR 10K, 5%, 1/8W	1010801031
R13	RESISTOR 4.7K, 5%, 1/8W	1010804723
R14	RESISTOR 1K, 5%, 1/8W	1010801023
R15	RESISTOR, 6.8M, 5%, 1/4W	1010910001
R16	RESISTOR 10, 5%, 1/8W	1010801007
R17	RESISTOR 1M, 10%, 1/4W	0170650006
R18	RESISTOR 4.7K, 5%, 1/8W	1010804723
R19	RESISTOR 100K, 5%, 1/8W	1010801040
R20	RESISTOR 100, 5%, 1/8W	1010801015
R21	POT. 500, 10% 3/4W, 15 TURNS	0338490078
R22	RESISTOR 10K, 5%, 1/8W	1010801031
R23	RESISTOR 10K, 5%, 1/8W	1010801031
R24	RESISTOR 1K, 5%, 1/8W	1010801023
R25	RESISTOR 10K, 5%, 1/8W	1010801031
R26	RESISTOR 1.8K, 5%, 1/8W	1010801821
R27	RESISTOR 4.7K, 5%, 1/8W	1010804723
R28	RESISTOR 10K, 5%, 1/8W	1010801031
R29	POT. 10K, 10% 3/4W, 15 TURNS	0338490043

Figure 5.8.6 PC Assembly, Audio 3A2A2, page 2 of 9.

R30	RESISTOR 10K, 5%, 1/8W	1010801031
R31	RESISTOR 100K, 5%, 1/8W	1010801040
R32	RESISTOR 15K, 5%, 1/8W	1010801538
R33	RESISTOR 270K, 5%, 1/8W	1010802747
R34	RESISTOR 10K, 5%, 1/8W	1010801031
R35	RESISTOR 10K, 5%, 1/8W	1010801031
R36	RESISTOR 470K, 5%, 1/8W	1010804740
R37	RESISTOR 470K, 5%, 1/8W	1010804740
R38	RESISTOR 1K, 5%, 1/8W	1010801023
R39	RESISTOR 1K, 5%, 1/8W	1010801023
R40	RESISTOR 10K, 5%, 1/8W	1010801031
R41	RESISTOR 10K, 5%, 1/8W	1010801031
R42	POT. 10K, 10% 3/4W, 15 TURNS	0338490043
R43	RESISTOR 56K, 5%, 1/8W	1010805631
R44	RESISTOR 10K, 5%, 1/8W	1010801031
R45	RESISTOR 10K, 5%, 1/8W	1010801031
R46	RESISTOR, 56.2K, 1%, 1/8W	1008910015
R47	RESISTOR 12.1K, 1%, 1/8W	1008900010
R48	RESISTOR 1K AT 25C	0196110009
R49	RESISTOR 390, 5%, 1/8W	1010803913
R50	RESISTOR, 4.99K, 1%, 1/8W	1005510032
R51	RESISTOR 10K, 5%, 1/8W	1010801031
R52	RESISTOR 28.7K 1%, 1/8W	1004090005
R53	RESISTOR 28.7K 1%, 1/8W	1004090005
R54	RESISTOR 10K, 5%, 1/8W	1010801031
R55	RESISTOR 2.2K, 5%, 1/8W	1010802224
R56	RESISTOR 10K, 5%, 1/8W	1010801031
R57	RESISTOR 100, 5%, 1/8W	1010801015
R58	POT. 500, 10% 3/4W, 15 TURNS	0338490078
R59	RESISTOR 1K, 5%, 1/8W	1010801023
R60	RESISTOR 1K, 5%, 1/8W	1010801023
R61	RESISTOR 47K, 5%, 1/8W	1010804731
R62	RESISTOR 47K, 5%, 1/8W	1010804731
R63	RESISTOR 1.5K, 5%, 1/8W	1010801520
R64	RESISTOR 180K, 5%, 1/8W	1010801848
R65	RESISTOR 47K, 5%, 1/8W	1010804731
R66	RESISTOR 3.3K, 5%, 1/8W	1010803328
R67	RESISTOR 180K, 5%, 1/8W	1010801848
R68	RESISTOR 180K, 5%, 1/8W	1010801848
R69	RESISTOR 2.2K, 5%, 1/8W	1010802224
R70	RESISTOR 10K, 5%, 1/8W	1010801031
R71	RESISTOR 10K, 5%, 1/8W	1010801031
R72	RESISTOR 10K, 5%, 1/8W	1010801031
R73	RESISTOR 10K, 5%, 1/8W	1010801031
R74	RESISTOR 10K, 5%, 1/8W	1010801031
R75	RESISTOR 3.3K, 5%, 1/8W	1010803328
R76	RESISTOR, 3.3M, 5%, 1/4W	1010820001
R77	RESISTOR 3.3K, 5%, 1/8W	1010803328
R78	RESISTOR 330K, 5%, 1/8W	1010803344
R79	RESISTOR 47K, 5%, 1/8W	1010804731
R80	RESISTOR 100K, 5%, 1/8W	1010801040
R81	RESISTOR 100K, 5%, 1/8W	1010801040
R82	RESISTOR 100K, 5%, 1/8W	1010801040
R83	RESISTOR 100K, 5%, 1/8W	1010801040

R84	RESISTOR 1K, 5%, 1/8W	1010801023
R85	RESISTOR 1K, 5%, 1/8W	1010801023
R86	RESISTOR 270K, 5%, 1/8W	1010802747
R87	RESISTOR 330K, 5%, 1/8W	1010803344
R88	RESISTOR, 3.3M, 5%, 1/4W	1010820001
R89	POT. 10K, 10% 3/4W, 15 TURNS	0338490043
R90	RESISTOR 10K, 5%, 1/8W	1010801031
R91	RESISTOR 10K, 5%, 1/8W	1010801031
R92	RESISTOR 1M, 10%, 1/4W	0170650006
R93	RESISTOR 1M, 10%, 1/4W	0170650006
R94	RESISTOR 330K, 5%, 1/8W	1010803344
R95	RESISTOR 22K, 5%, 1/8W	1010802232
R96	RESISTOR 10K, 10%, 1/4W	0170410005
R97	RESISTOR 22K, 5%, 1/8W	1010802232
R98	RESISTOR 10K, 5%, 1/8W	1010801031
R99	RESISTOR 10K, 5%, 1/8W	1010801031
R100	RESISTOR 100K, 5%, 1/8W	1010801040
R101	RESISTOR 10K, 5%, 1/8W	1010801031
R102	RESISTOR 10K, 5%, 1/8W	1010801031
R103	POT. 25K, 10% 3/4W, 15 TURNS	0338490094
R107	RESISTOR 10K, 5%, 1/8W	1010801031
R108	RESISTOR 470, 10%, 1/2W	0173900003
R109	RESISTOR 18, 5%, 1/2W	0184730007
R110	RESISTOR 33, 10%, 1W	0165660007
R111	RESISTOR 47, 10%, 2W	0163720002
R112	RESISTOR 10K, 5%, 1/8W	1010801031
R113	RESISTOR 1M, 10%, 1/4W	0170650006
R114	RESISTOR 10K, 5%, 1/8W	1010801031
R115	RESISTOR 10K, 5%, 1/8W	1010801031
R116	RESISTOR 10K, 5%, 1/8W	1010801031
R117	RESISTOR 6.8K, 5%, 1/8W	1010806823
R118	RESISTOR 3.3K, 5%, 1/8W	1010803328
R119	POT. 10K, 10% 3/4W, 15 TURNS	0338490043
R120	RESISTOR 10K, 5%, 1/8W	1010801031
R121	RESISTOR 33K, 5%, 1/8W	1010803336
R122	RESISTOR 10K, 5%, 1/8W	1010801031
R123	RESISTOR 10K, 5%, 1/8W	1010801031
R124	RESISTOR 22, 5%, 1/8W	1010802208
R125	RESISTOR 2.2K, 5%, 1/8W	1010802224
R126	RESISTOR 56K, 5%, 1/8W	1010805631
R127	RESISTOR 1K, 5%, 1/8W	1010801023
R128	RESISTOR 10K, 5%, 1/8W	1010801031
R129	RESISTOR 10K, 5%, 1/8W	1010801031
R130	RESISTOR 100K, 5%, 1/8W	1010801040
R131	RESISTOR 100K, 5%, 1/8W	1010801040
R132	RESISTOR 10K, 5%, 1/8W	1010801031
R133	RESISTOR 100K, 5%, 1/8W	1010801040
R134	RESISTOR 100K, 5%, 1/8W	1010801040
R135	RESISTOR 10K, 5%, 1/8W	1010801031
R136	RESISTOR 100K, 5%, 1/8W	1010801040
R137	RESISTOR 10K, 5%, 1/8W	1010801031
R138	RESISTOR 100K, 5%, 1/8W	1010801040
R139	RESISTOR 10K, 5%, 1/8W	1010801031
R140	RESISTOR 1K, 5%, 1/8W	1010801023

Figure 5.8.6 PC Assembly, Audio 3A2A2, page 3 of 9.

R141	RESISTOR 1K, 5%, 1/8W	1010801023
R142	RESISTOR 1K, 5%, 1/8W	1010801023
R144	RESISTOR 68K, 5%, 1/8W	1010806831
R145	RESISTOR 10K, 5%, 1/8W	1010801031
R146	RESISTOR 47K, 5%, 1/8W	1010804731
R148	RESISTOR 3.3K, 5%, 1/8W	1010803328
R149	RESISTOR 2.7K, 5%, 1/8W	1010802721
R150	RESISTOR 10K, 5%, 1/8W	1010801031
R151	RESISTOR 10K, 5%, 1/8W	1010801031
R152	RESISTOR 39K, 5%, 1/8W	1010803930
R153	RESISTOR 1, 10%, 1/2W	0194770001
R154	RESISTOR 10K, 5%, 1/8W	1010801031
R155	RESISTOR 39K, 5%, 1/8W	1010803930
R156	RESISTOR 10K, 5%, 1/8W	1010801031
R157	RESISTOR 10K, 5%, 1/8W	1010801031
R158	RESISTOR 4.7K, 5%, 1/8W	1010804723
R159	RESISTOR 18K, 5%, 1/8W	1010801830
R160	RESISTOR 1K, 5%, 1/8W	1010801023
R161	RESISTOR 47K, 5%, 1/8W	1010804731
R162	POT. 1K, 10% 1/2, 4 TURNS	1000850021
R163	RESISTOR 22K, 5%, 1/8W	1010802232
R164	RESISTOR 100K, 5%, 1/8W	1010801040
R165	RESISTOR 100K, 5%, 1/8W	1010801040
R166	RESISTOR 4.7K, 5%, 1/8W	1010804723
R167	RESISTOR 22K, 5%, 1/8W	1010802232
R168	RESISTOR 22K, 5%, 1/8W	1010802232
R169	RESISTOR 22K, 5%, 1/8W	1010802232
R170	RESISTOR 150, 5%, 1/8W	1010801511
R171	RESISTOR 4.7K, 5%, 1/8W	1010804723
R172	RESISTOR 10K, 5%, 1/8W	1010801031
R173	RESISTOR 4.7K, 5%, 1/8W	1010804723
R174	RESISTOR 10K, 5%, 1/8W	1010801031
R175	POT. 5K, 10% 1/2W, 25 TURNS	1004720025
R176	RESISTOR 10K, 5%, 1/8W	1010801031
R177	RESISTOR 1K, 5%, 1/8W	1010801023
R178	RESISTOR 4.7K, 5%, 1/8W	1010804723
R179	RESISTOR 4.7K, 5%, 1/8W	1010804723
R180	RESISTOR 47K, 5%, 1/8W	1010804731
RP1	RES NTWK 6 PIN SIP 10K COM	1006130004
S1	SWITCH, DPST,DIP, 3 SECTION	1010880004
T1	TRANSFORMER, AUDIO, PC MOUNT	0491650001
T2	TRANSFORMER, AUDIO, PC MOUNT	0491650001
TP1	TERMINAL, TURRET SWGD .071 MTG	0525580000
TP2	TERMINAL, TURRET SWGD .071 MTG	0525580000
TP3	TERMINAL, TURRET SWGD .071 MTG	0525580000
TP4	TERMINAL, TURRET SWGD .071 MTG	0525580000
TP5	TERMINAL, TURRET SWGD .071 MTG	0525580000
TP6	TERMINAL, TURRET SWGD .071 MTG	0525580000
TP7	TERMINAL, TURRET SWGD .071 MTG	0525580000
U1	IC. DIGITAL 74HC14	1006490027
U2	IC. DIGITAL 74HC14	1006490027
U3	IC. DIGITAL 74HC00	1008190004
U4	IC. DIGITAL 74HC08	1006490019
U5	IC. LINEAR UDN2935Z	1010830007
U6	IC. LINEAR UDN2935Z	1010830007

Figure 5.8.6 PC Assembly, Audio 3A2A2, page 4 of 9.

U7	IC. LINEAR MC3358P1	1010110012
U8	IC. LINEAR LC403	1010850008
U9	IC. LINEAR MC3358P1	1010110012
U10	IC. LINEAR MC3358P1	1010110012
U11	IC. LINEAR LF-347	1007500026
U12	IC. DIGITAL 4584B	1005190011
U13	IC. DIGITAL 4066BC	1004460023
U14	IC. LINEAR LF-347	1007500026
U15	IC. LINEAR LF-347	1007500026
U16	IC. LINEAR LF-347	1007500026
U17	IC. LINEAR TDA1524A	1010780026
U18	IC. LINEAR TDA2008	~~1003140025~~ 1012120031
U19	IC. DIGITAL 4001B	1004660022
U20	IC. DIGITAL 4066BC	1004460023
U21	IC. LINEAR 5532	1006270019
U22	IC. LINEAR LM311N	1005760021
U23	IC. DIGITAL 4066BC	1004460023
U24	IC. DIGITAL 4081B	1006280031
U25	IC. DIGITAL 4066BC	1004460023
U26	IC. LINEAR MC3358P1	1010110012
U28	IC. DIGITAL 75372	1010760017
U29	IC. LINEAR NE570	1011500001
U30	IC. LINEAR LF-347	1007500026
U31	IC. DIGITAL 4066BC	1004460023
	HEATSINK, SPEAKER DRIVER	8076092205
	INSULATOR, MICA TO-220AB	0448670003
	MOUNTING PLATE, AUDIO BOARD	8076091608

S1-1 MIC COMPRESSOR ON OR OFF
S1-2 XMIT SQUELCH ON OR OFF
S1-3 LINE AUDIO COMPRESSOR ON OR OFF

NORMAL SETTINGS FOR S1-1THRU 3 SHOWN.

ON
OFF

1002DP

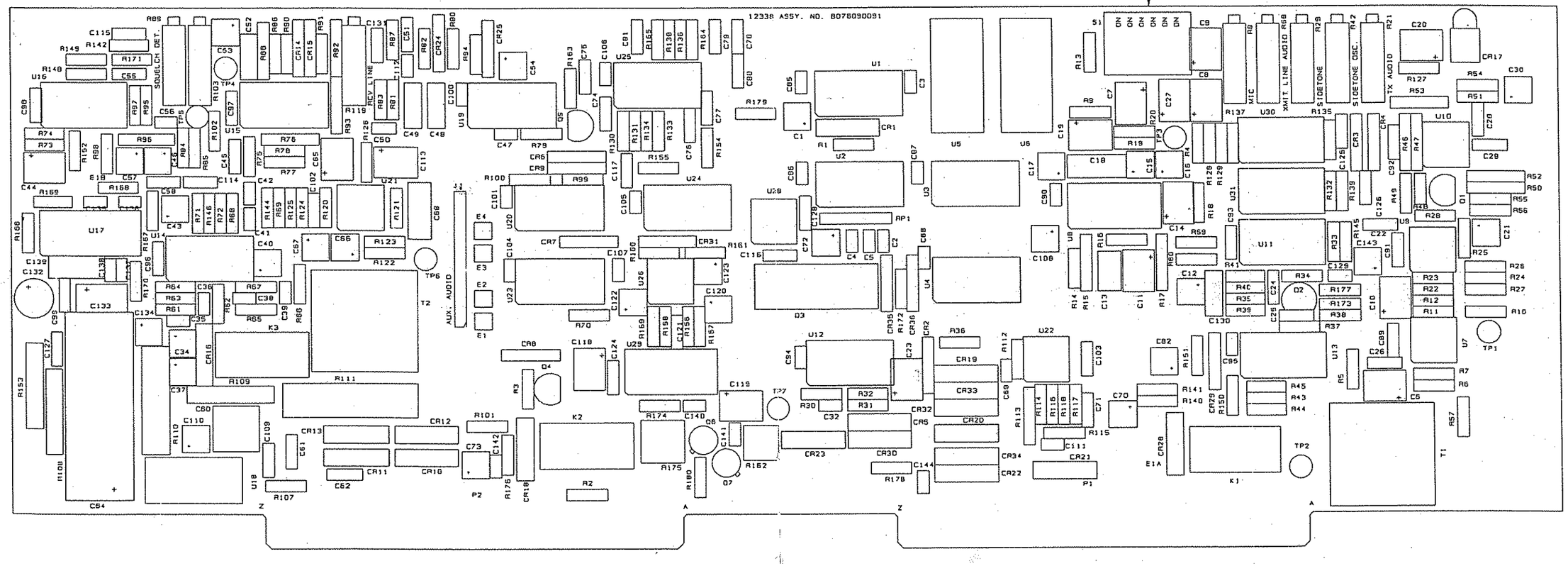

Figure 5.8.6 PC Assembly, Audio 3A2A2, page 5 of 9.

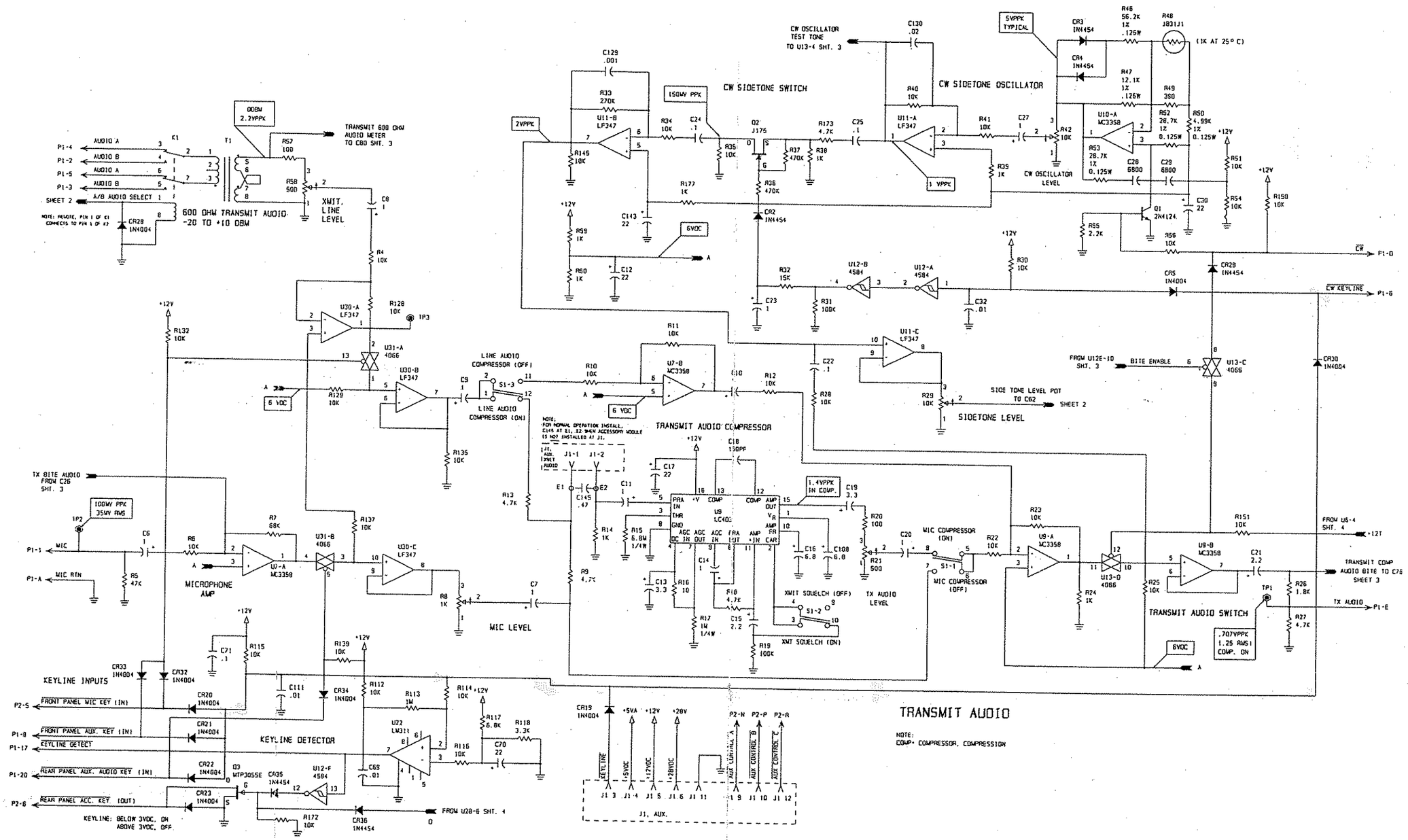

Figure 5.8.6 PC Assembly, Audio 3A2A2, page 6 of 9.

SH 1

B1002E

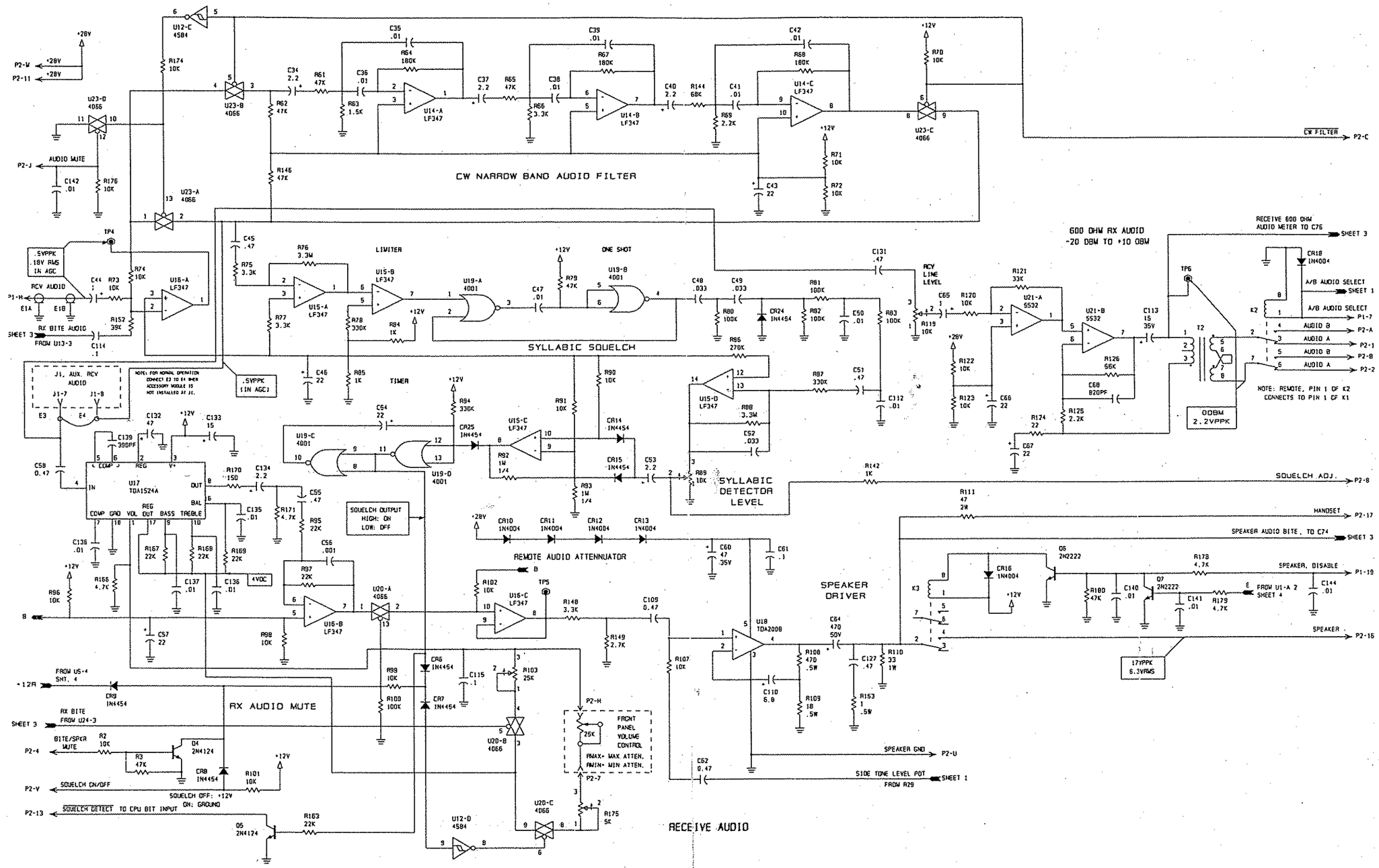

Figure 5.8.6 PC Assembly, Audio 3A2A2, page 7 of 9.

SN 2

C1002E

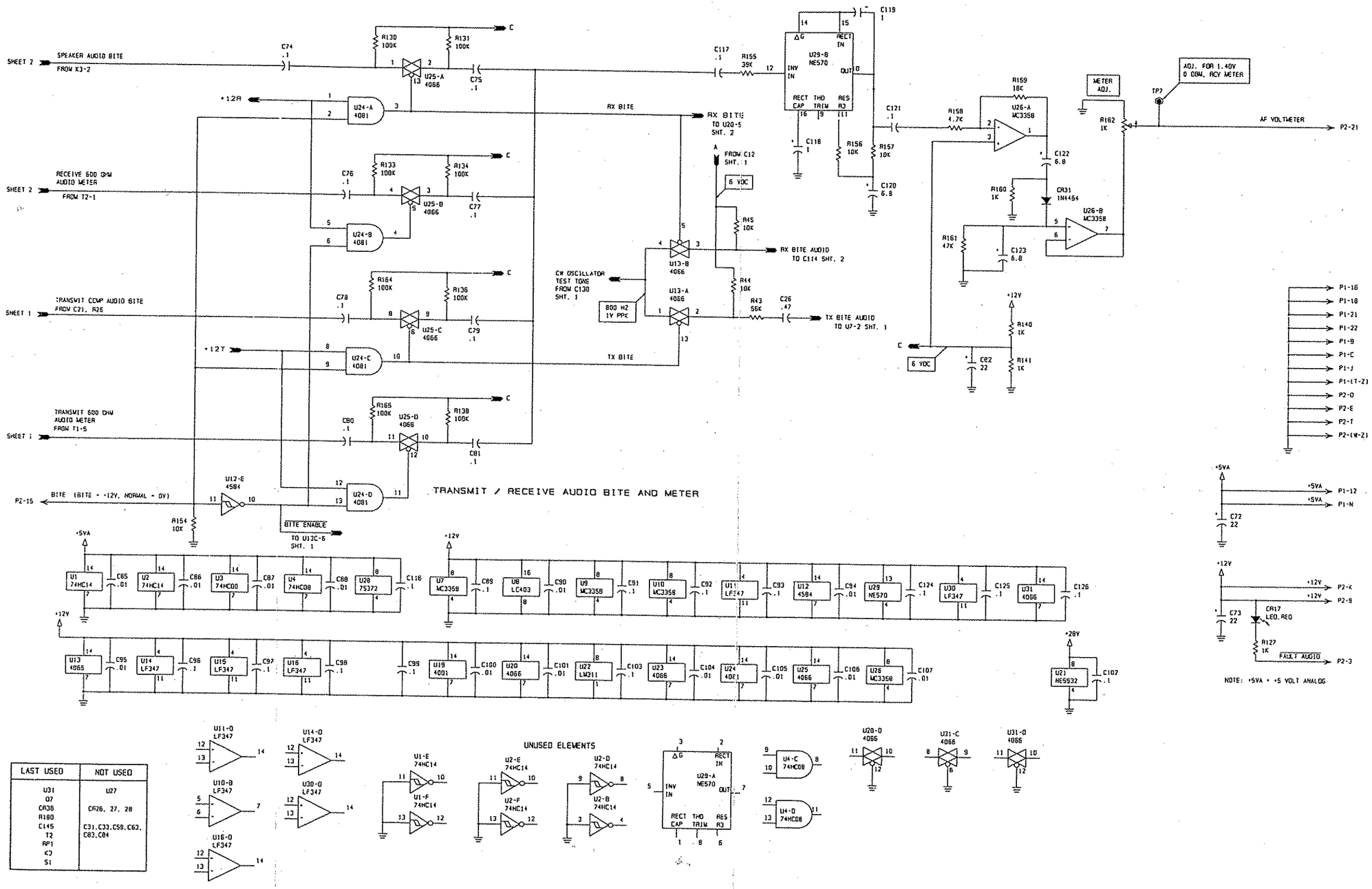

LAST USED	NOT USED
U31	U27
Q7	CR26, 27, 28
CR36	
R180	
C145	C31,C33,C59,C63, C83,C84
T2	
RP1	
K3	
S1	

Figure 5.8.6 PC Assembly, Audio 3A2A2, page 8 of 9.

SH 3

D1002E

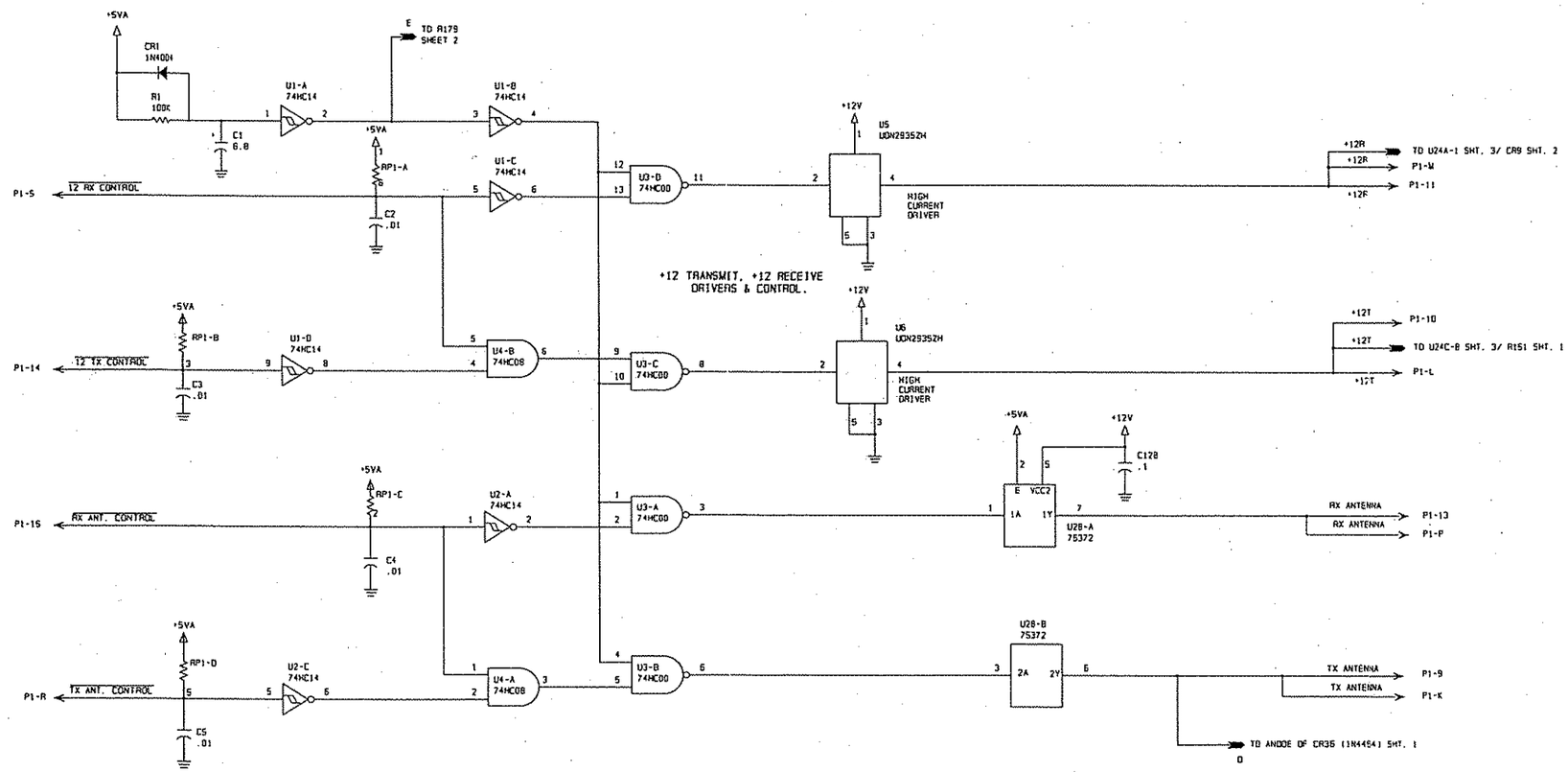

Figure 5.8.6 PC Assembly, Audio 3A2A2, page 9 of 9.

SH 4

A1002E

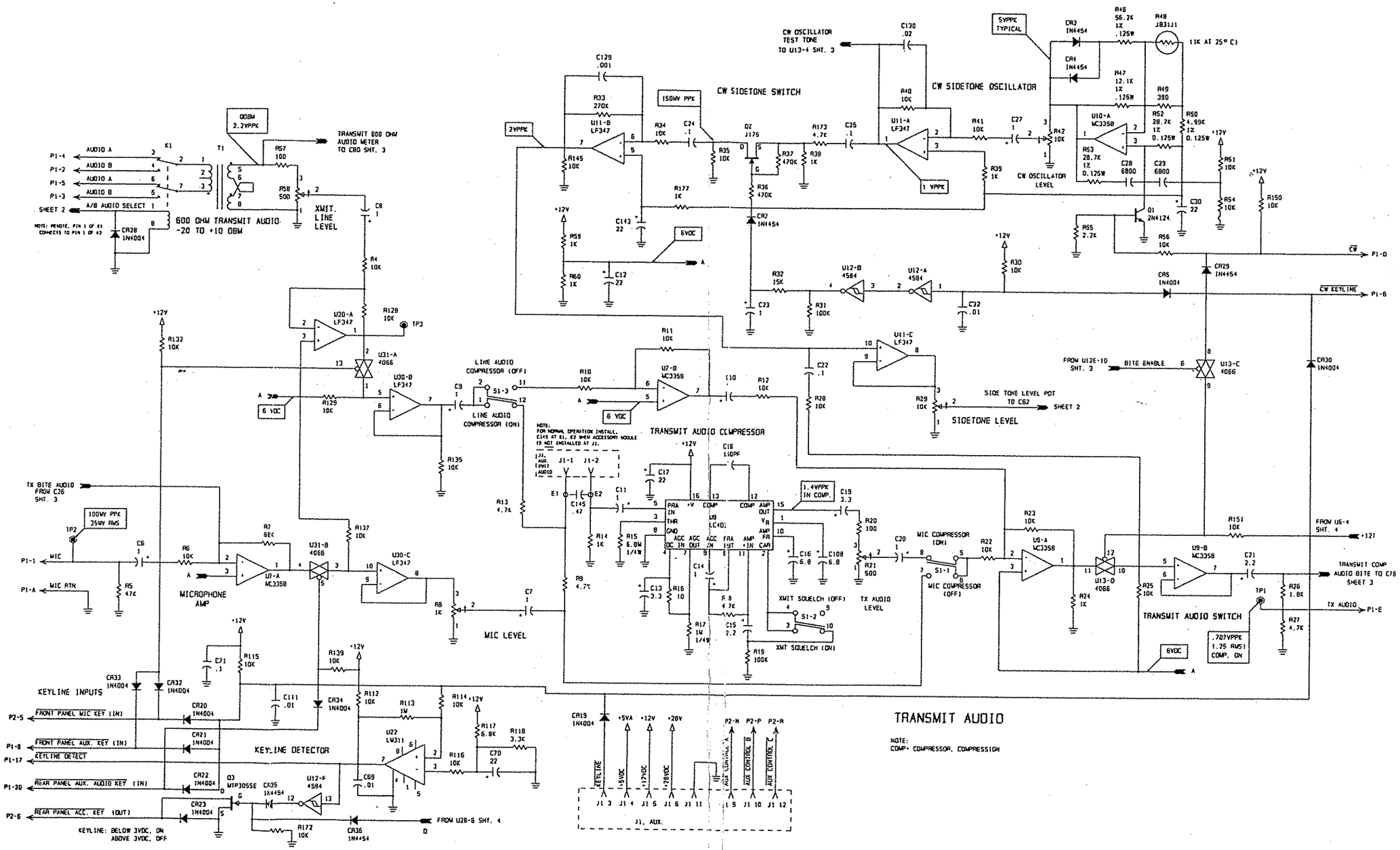

Figure 5.8.6 PC Assembly, Audio 3A2A2, page 6 of 9.

5/11

B1002E

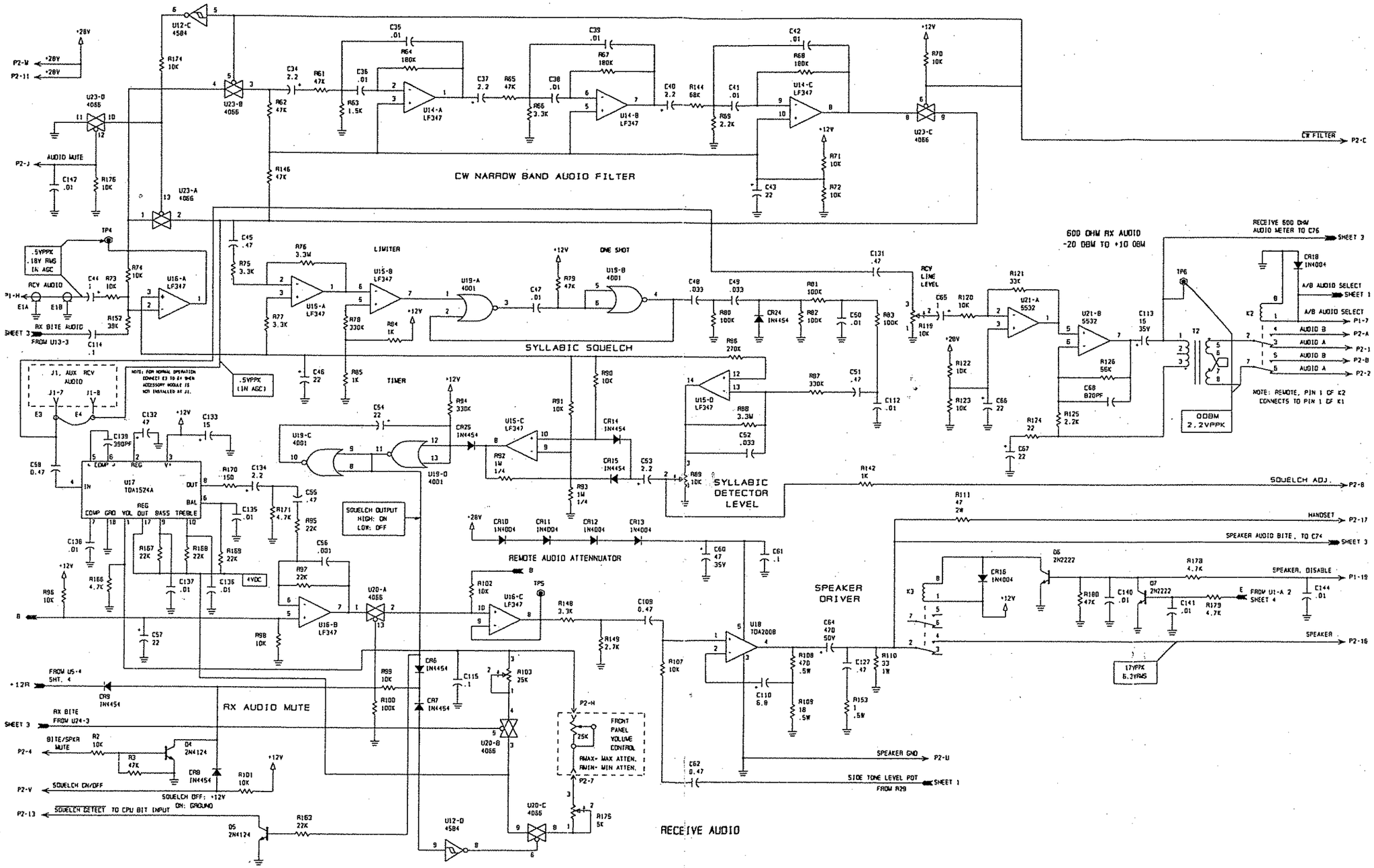

Figure 5.8.6 PC Assembly, Audio 3A2A2, page 7 of 9.

SH 2

C1002E

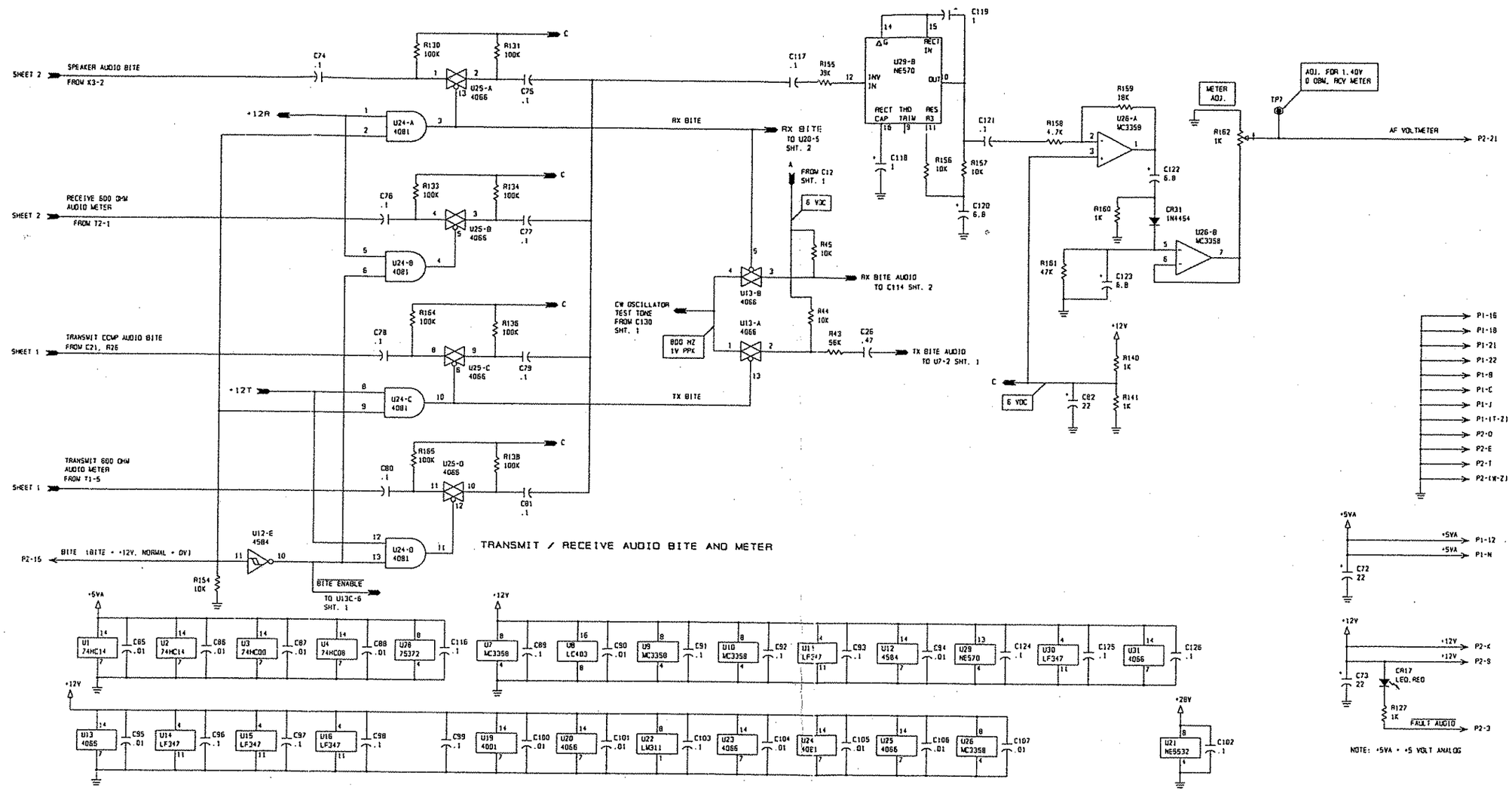

LAST USED	NOT USED
U31 Q7 CR36 R160 C145 T2 RP1 C3 S1	U27 CR26, 27, 28 C31,C33,C59,C63, C83,C84

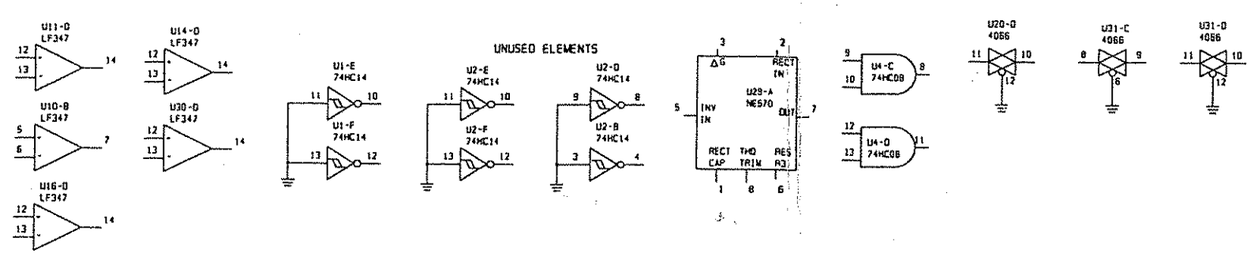

Figure 5.8.6 PC Assembly, Audio 3A2A2, page 8 of 9.

SH 3

D1002E

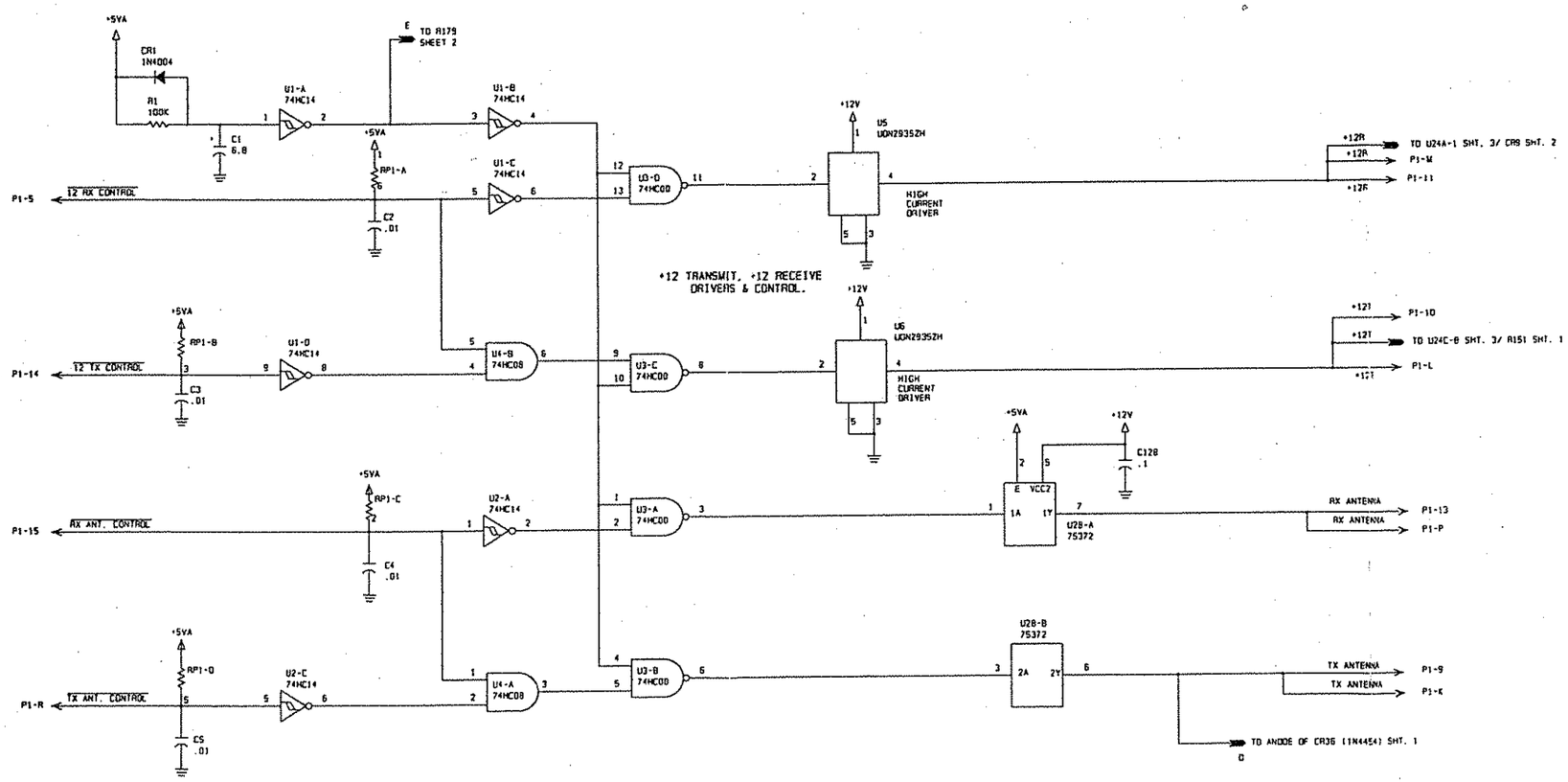

Figure 5.8.6 PC Assembly, Audio 3A2A2, page 9 of 9.

SH 4

PC ASSY, I/O BOARD 3A2A3

	PC ASSY, I/O BOARD 3A2A3	8076110092
C1	CAP. .01µF, 50V, X7R 20%	0281730008
C2	CAP. 6.8µF, 20V, T368	0296780006
C3	CAP. .01µF, 50V, X7R 20%	0281730008
C4	CAP. .01µF, 50V, X7R 20%	0281730008
C5	CAP. .01µF, 50V, X7R 20%	0281730008
C6	CAP. .01µF, 50V, X7R 20%	0281730008
C7	CAP. .01µF, 50V, X7R 20%	0281730008
C8	CAP. .01µF, 50V, X7R 20%	0281730008
C9	CAP. 22µF, 15V, 196D	0281690006
C10	CAP. 22µF, 15V, 196D	0281690006
C11	CAP. 47µF, 20V, 196D	0281700001
C12	CAP. .01µF, 50V, X7R 20%	0281730008
C13	CAP. .01µF, 50V, X7R 20%	0281730008
C14	CAP. .01µF, 50V, X7R 20%	0281730008
C15	CAP. 10µF, 20V	1007290005
C16	CAP. 22µF, 15V, 196D	0281690006
C17	CAP. 22µF, 15V, 196D	0281690006
C18	CAP. .01µF, 50V, X7R 20%	0281730008
C19	CAP. 47µF, 20V, 196D	0281700001
C20	CAP. .01µF, 50V, X7R 20%	0281730008
C21	CAP. .01µF, 50V, X7R 20%	0281730008
C22	CAP. .01µF, 50V, X7R 20%	0281730008
C23	CAP. .01µF, 50V, X7R 20%	0281730008
C24	CAP. .01µF, 50V, X7R 20%	0281730008
C25	CAP. .01µF, 50V, X7R 20%	0281730008
C26	CAP. .01µF, 50V, X7R 20%	0281730008
C27	CAP. .01µF, 50V, X7R 20%	0281730008
C28	CAP. .01µF, 50V, X7R 20%	0281730008
C29	CAP. .01µF, 50V, X7R 20%	0281730008
C30	CAP. .01µF, 50V, X7R 20%	0281730008
C31	CAP. .01µF, 50V, X7R 20%	0281730008
C32	CAP. .01µF, 50V, X7R 20%	0281730008
C33	CAP. .01µF, 50V, X7R 20%	0281730008
C34	CAP. .01µF, 50V, X7R 20%	0281730008
C35	CAP. .01µF, 50V, X7R 20%	0281730008
CR1	DIODE, LED, RED, PC MOUNT	1008480029
CR2	DIODE, RECTIFIER 1N4004	0405180004
CR3	DIODE, RECTIFIER 1N4004	0405180004
J1	CONNECTOR, POWER, 9 PIN FEMALE	1011090015
K1	RELAY, DPDT, 12VDC	1005090009
K2	RELAY, DPDT, 12VDC	1005090009
L1	INDUCTOR, MOLDED, 33µH, 5%	0659690004
L2	INDUCTOR, MOLDED, 33µH, 5%	0659690004
L3	INDUCTOR, MOLDED, 33µH, 5%	0659690004
L4	INDUCTOR, MOLDED, 33µH, 5%	0659690004
L5	INDUCTOR, MOLDED, 33µH, 5%	0659690004
L6	INDUCTOR, MOLDED, 33µH, 5%	0659690004
L7	INDUCTOR, MOLDED, 33µH, 5%	0659690004
L8	INDUCTOR, MOLDED, 33µH, 5%	0659690004
L9	INDUCTOR, MOLDED, 33µH, 5%	0659690004

Figure 5.8.8 PC Assembly, I/O Board 3A2A3, page 1 of 4.

P1	CONNECTOR, HEADER 40 PIN	1010780000
P2	CONNECTOR, HEADER, 14 PIN MALE	1011210142
Q1	TRANSISTOR, NPN, SI. 2N4124	0448010003
Q2	TRANSISTOR, NPN, SI. 2N4124	0448010003
R1	RESISTOR 680, 10%, 1/4W	0176630007
R2	RESISTOR 100K, 10%, 1/4W	0170390004
R3	RESISTOR 10K, 10%, 1/4W	0170410005
R4	RESISTOR 10K, 10%, 1/4W	0170410005
R5	RESISTOR 10K, 10%, 1/4W	0170410005
R6	RESISTOR 100K, 10%, 1/4W	0170390004
R7	RESISTOR 10K, 10%, 1/4W	0170410005
R8	RESISTOR 10K, 5%, 1/8W	1010801031
R9	RESISTOR 10K, 5%, 1/8W	1010801031
R10	RESISTOR 82, 10%, 1/4W	0184610001
R11	RESISTOR 10K, 5%, 1/8W	1010801031
R12	RESISTOR 68, 5%, 1/8W	1010806807
R13	RESISTOR 68, 5%, 1/8W	1010806807
R14	RESISTOR 68, 5%, 1/8W	1010806807
R15	RESISTOR 68, 5%, 1/8W	1010806807
RP1	RES NTWK 10 PIN SIP 10K COM	1006130021
RP2	RES NTWK 10 PIN SIP 10K COM	1006130021
RP3	RES NTWK 10 PIN SIP 10K COM	1006130021
U1	CRYSTAL OSCILLATOR, 7.3728MHZ	1008850012
U2	IC. DIGITAL 74HC00	1008190004
U3	IC. DIGITAL 74HC00	1008190004
U4	IC. DIGITAL 4078B	1010460030
U5	IC. DIGITAL 74HC374	1006450033
U6	IC. DIGITAL 74HC374	1006450033
U7	IC. DIGITAL 74HC04	1010280023
U8	IC. DIGITAL 74HC32	1006470026
U9	IC. DIGITAL 2681	1008790010
U10	IC. DIGITAL 80C85A	1007400013
U11	IC. DIGITAL 74HC138	1006480013
U12	IC. DIGITAL 74HC125	1008810011
U13	IC. DIGITAL 74HC373	1006480030
U14	IC. DIGITAL 74HC32	1006470026
U15	IC. DIGITAL RAM UPD446D	1006430008
U16	IC. DIGITAL ICL232	1010510011
U17	IC. DIGITAL ICL232	1010510011
U18	IC. DIGITAL 75176	1011100011
U19	IC. DIGITAL 75176	1011100011
U20	EPROM, W/IO SOFTWARE RCU-9310	8078113293
XU9	SOCKET, IC, 40 PIN TAILLESS	1006620010
XU10	SOCKET, IC, 40 PIN TAILLESS	1006620010
XU20	SOCKET, IC, 28 PIN TAILLESS	1006620001
	FERRITE BEAD, 850 PERM	1010410032
	MOUNTING PLATE, I/O BOARD	8076111200

NOTE: U20 EPROM is not part of PC ASSY I/O BOARD 3A2A3 P/N 8076110092.

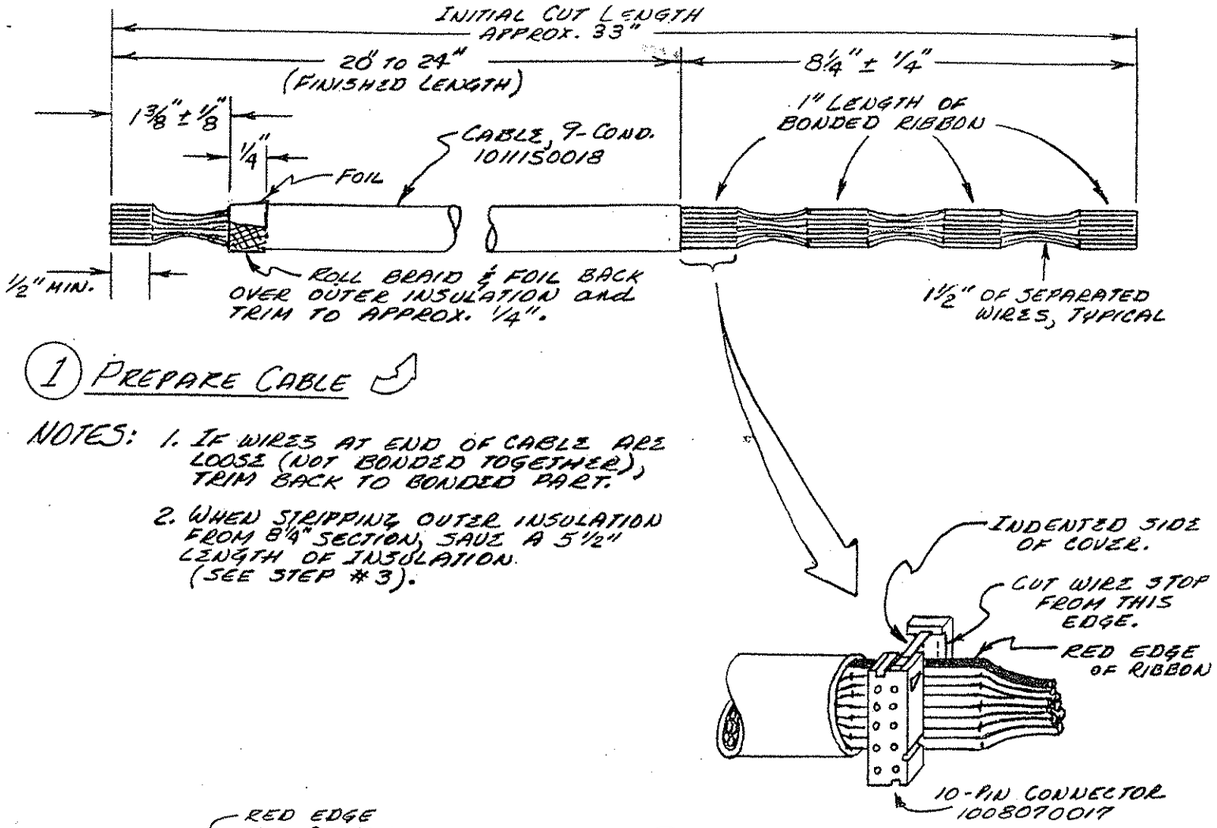

(1) PREPARE CABLE

NOTES: 1. IF WIRES AT END OF CABLE ARE LOOSE (NOT BONDED TOGETHER), TRIM BACK TO BONDED PART.

2. WHEN STRIPPING OUTER INSULATION FROM 8¼" SECTION, SAVE A 5½" LENGTH OF INSULATION. (SEE STEP #3).

(2) MOUNT CONNECTOR

(CENTERED IN 1" BONDED AREA).

NOTE: CONNECTOR HAS 10 PINS and RIBBON IS ONLY 9-WIRE. RED EDGE MUST BE IN #1 POSITION (AT ▽), LEAVING EMPTY POSITION AT OTHER END OF CONNECTOR. (SEE STEP #3)

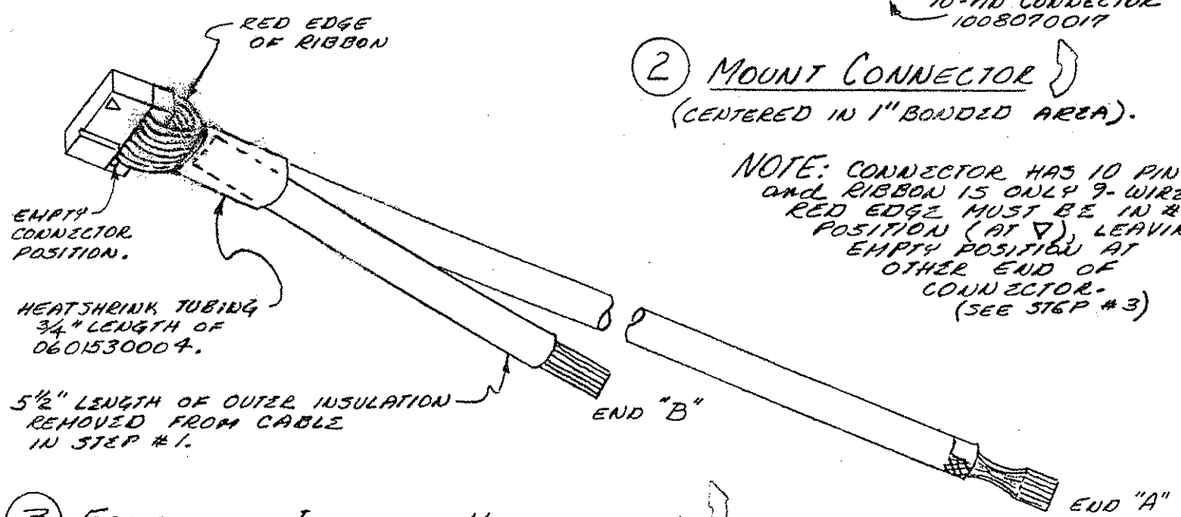

(3) FOLD AND INSTALL HEATSHRINK

1. SLIDE 5½" LENGTH OF INSULATION OVER STRIPPED RIBBON BESIDE CONNECTOR.
2. FOLD CABLE AT CONNECTOR AND PRESS RIBBON AGAINST SIDES OF CONNECTOR.
3. SLIDE HEATSHRINK OVER 2 ENDS OF CABLE AND PUSH AS FAR TOWARD CONNECTOR AS POSSIBLE. SHRINK HEATSHRINK TUBING.

(4) MOUNT TWO 9-PIN CONNECTORS, ONE ON EACH END OF CABLE.

1. PRESS RIBBON ONTO COVER, PRESS COVER ONTO CONNECTOR. (WATCH FOR POSITION OF WIRE STOP ON COVER, RED EDGE ON RIBBON, and 5-PIN ROW ON CONNECTOR).
2. PULL RIBBON FIRMLY BACK OVER COVER IN DIRECTION OF WHITE ARROW, and INSTALL STRAIN RELIEF CLAMP.

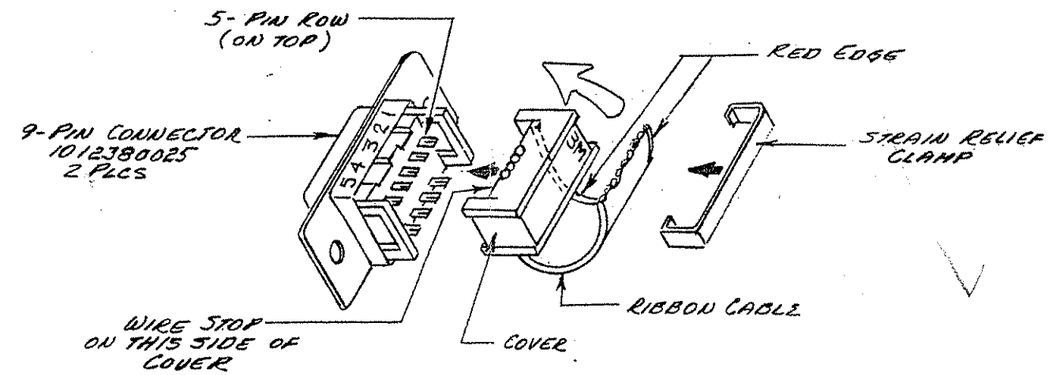

(5) INSTALL SHIELDING COVERS ON TWO 9-PIN CONNECTORS.

1. INSTALL SCREWS INTO SHELL EARS and SECURE WITH C-CLIP (ON A-END OF CABLE ONLY).
2. SNAP COVERS OVER CONNECTOR, SCREW PLASTIC CAP ONTO COVER.

C-CLIP (SUPPLIED WITH SHELL 1011150017) INSERT SCREW THROUGH SHELL EARS, SNAP C-CLIP ON TO SHANK BEHIND SCREW THREADS, SNAP OFF INSTALLATION WASHER BY BENDING IT TOWARD SCREW.

NOTE: ONLY LONGER "A"-END OF CABLE HAS SCREW LOCKS INSTALLED.

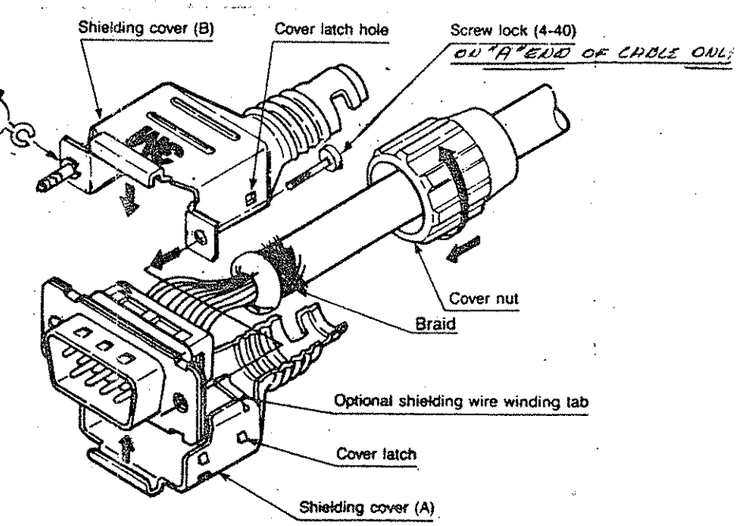

SUNAIR electronics inc.	ECN	6022	6145	6185					Title ROUND RIBBON CABLE, CHASSIS A354, RCU-9310				Drawing No. PD 80780100 52/95	Rev. B
Drawn By: RLS	Rv	A2	A3	B					I.E. RLS	P.E.	C.E.	Date 9.5.90	Pg. 1 of	Rev. Date

1079P

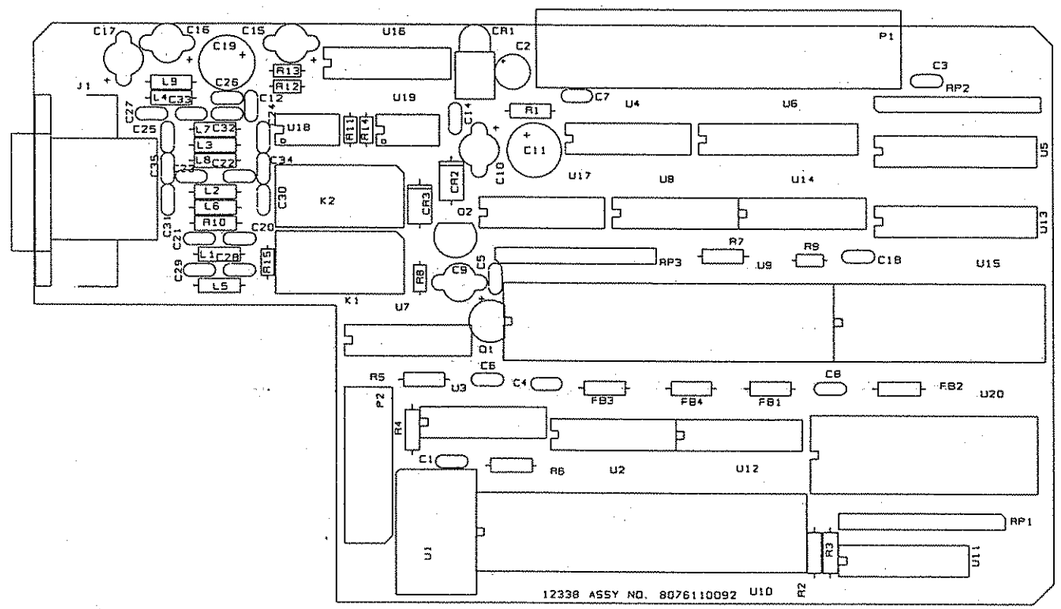

Figure 5.8.8 PC Assembly, I/O Board 3A2A3, page 2 of 4.

PC ASSY, FSK MODEM 3A2A3A1

C1	PC ASSY, FSK MODEM 3A2A3A1	8076115094
C2	CAP. 10μF, 20V	1007290005
C3	CAP. 0.001μF, 100V, X7R, 20%	0281630003
C4	CAPACITOR 0.1μF, 50V, X7R	1011180014
C5	CAPACITOR 0.1μF, 50V, X7R	1011180014
C6	CAPACITOR 0.1μF, 50V, X7R	1011180014
P1	CAPACITOR 0.1μF, 50V, X7R	1011180014
R1	CONNECTOR, RIBBON, 14 PIN FEM	1008350001
R2	RESISTOR 604, 1%, 1/8W	0193980002
R3	RESISTOR 5.6K, 5%, 1/8W	1010805622
R4	RESISTOR 10K, 5%, 1/8W	1010801031
R5	RESISTOR 10K, 5%, 1/8W	1010801031
T1	RESISTOR 10K, 5%, 1/8W	1010801031
U1	TRANSFORMER, MODEM	1011340011
X1	IC. DIGITAL MC145443	1011330016
XP1	CRYSTAL, 3.579545 MHZ	1006270001
ZS1	CONNECTOR,PCB,TRANSITION,14PIN	1011090147
	VARISTOR, MOV V230LA20A	1010720023
	CABLE, FLAT, 14 COND. 28AWG	1011170001
	SCREW, PH4-40 X 5/16 LG.	0500850054
	WASHER, SPLIT #4	0500020001
	WASHER, FLAT #4 .219 OD	0502560002

1159CP

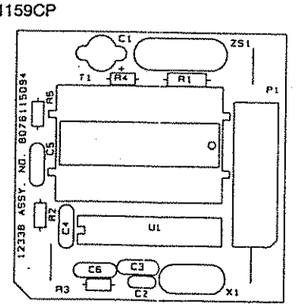

Figure 5.8.9 PC Assembly, FSK Modem 3A2A3A1, page 1 of 2.

A1159C

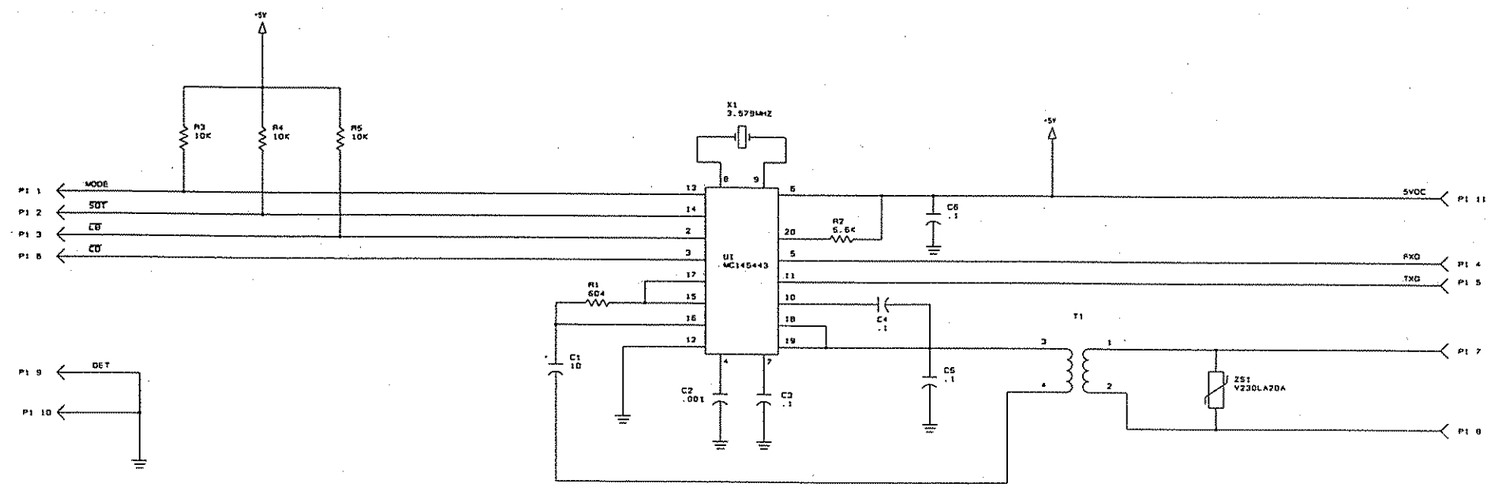

Figure 5.8.9 PC Assembly, FSK Modem 3A2A3A1, page 2 of 2.

THIS PAGE INTENTIONALLY LEFT BLANK.

A2105A

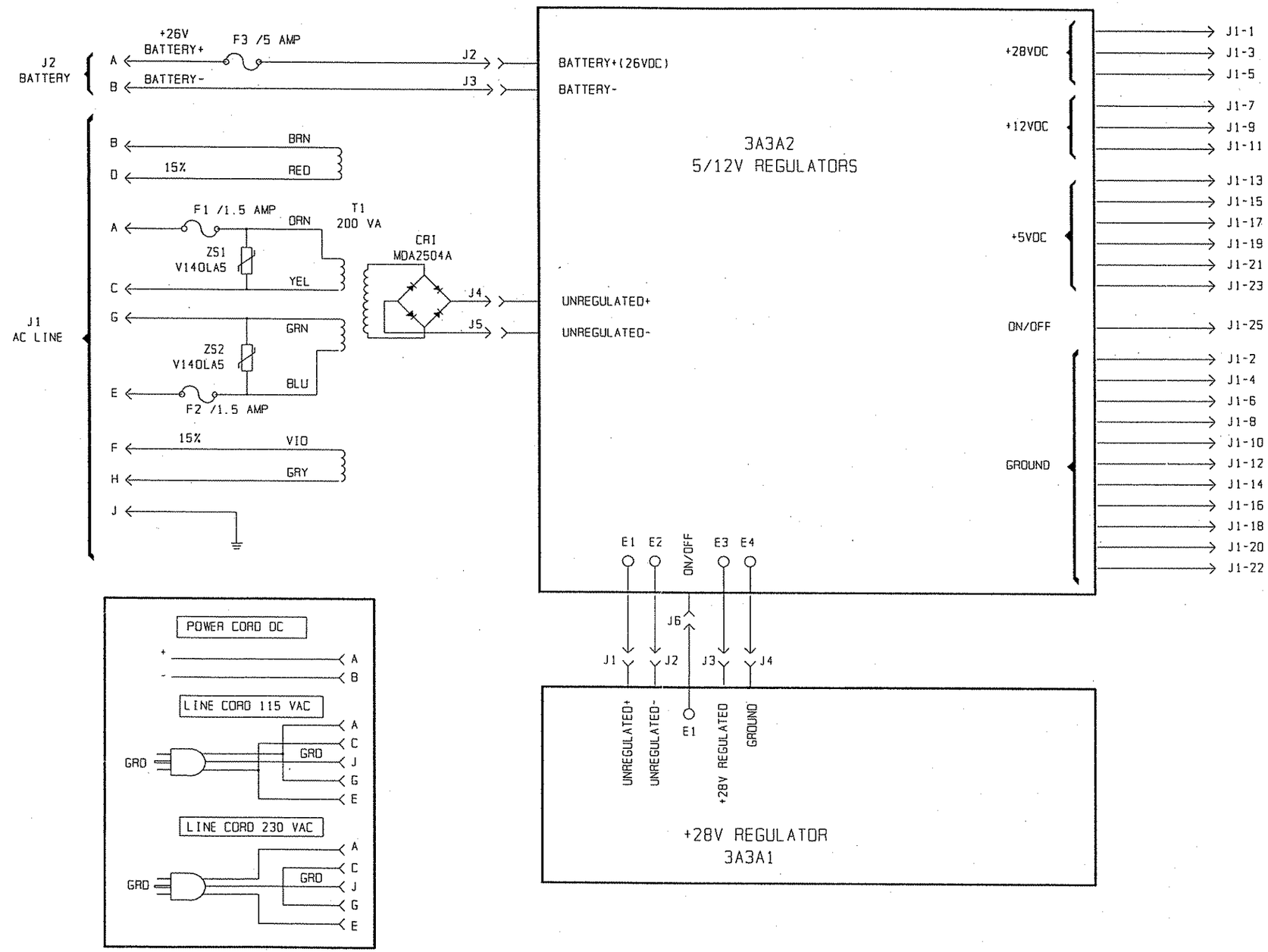

Figure 5.8.10 AC/DC Power Supply Chassis and Interconnect Diagram, page 1 of 1.

PC ASSY, 28V REGULATOR, 5 AMP 3A3A1

	PC ASSY,28V REG, 5 AMP 3A3A1	8078021496
C1	CAP. .47µF, 50V, X7R 20%	0283377771
C2	CAPACITOR 0.1µF, 50V, X7R	1011180014
C3	CAP. 0.047 µF, 50V, X7R, 10%	1010740008
C4	CAP. 2.2µF, 35V, T368	0273950002
C5	CAP. .01µF, 50V, X7R 20%	0281730008
C6	CAP. 1µF, 35V, 196D	0281660000
C7	CAPACITOR 0.1µF, 50V, X7R	1011180014
C8	CAP. 2.2µF, 35V, T368	0273950002
C9	CAP. .01µF, 50V, X7R 20%	0281730008
C10	CAP. .01µF, 50V, X7R 20%	0281730008
C11	CAP. 1µF, 35V, 196D	0281660000
C12	CAPACITOR 0.1µF, 50V, X7R	1011180014
C13	CAP. .47µF, 50V, X7R 20%	0283377771
C15	CAP. 1000µF, 63V, 20%, 105C	1011350009
C16	CAP. 22µF, 15V, T368	0296660001
CR1	DIODE, SIGNAL, SIL. 1N4454	0405270003
CR2	DIODE, ZENER 1N5358B	0404900003
CR3	DIODE, LED, RED, PC MOUNT	1008480029
CR4	DIODE, ZENER 1N5364B	0405230001
CR5	DIODE, RECTIFIER 1N4004	0405180004
CR6	DIODE, LED, RED, PC MOUNT	1008480029
CR7	DIODE, LED, RED, PC MOUNT	1008480029
CR8	DIODE, LED, GREEN PC MOUNT	1011030012
CR9	DIODE, SIGNAL, SIL. 1N4454	0405270003
CR10	DIODE, SIGNAL, SIL. 1N4454	0405270003
CR11	DIODE, RECTIFIER 1N4004	0405180004
J1	TERMINAL, PC MOUNT, 3/16" MALE	1008550027
J2	TERMINAL, PC MOUNT, 1/4" MALE	1008330035
J3	TERMINAL, PC MOUNT, 3/16" MALE	1008550027
J4	TERMINAL, PC MOUNT, 1/4" MALE	1008330035
K1	RELAY, SPST, 24V	1008590029
*Q1	TRANSISTOR, PNP, MJ11031	1010990012
Q2	DIODE, SCR 2N5062	1011010011
Q3	TRANSISTOR, NPN, SI. 2N2222A	0448580004
R1	RESISTOR 470, 10%, 1W	0165280000
R2	RESISTOR 560, 5%, 1/4W	0183200004
R3	RESISTOR, 3.9K, 5%, 1/8W	1010803921
R4	RESISTOR 4.7K; 5%, 1/8W	1010804723
R5	RESISTOR 6.8K, 5%, 1/8W	1010806823
R6	RESISTOR 2.2K, 5%, 1/8W	1010802224
R7	POT. 500, 10% 3/4W, 15 TURNS	0338490078
R8	RESISTOR 2.7K, 10%, 1/4W	0186670001
R9	RESISTOR 1K, 10%, 1/4W	0171560001
R10	RESISTOR 4.7K, 5%, 1/4W	0170770001
R11	RESISTOR 2.7K, 10%, 1/2W	0165780002
R12	RESISTOR 10K, 5%, 1/8W	1010801031
R13	RESISTOR 10K, 5%, 1/8W	1010801031
R14	RESISTOR 1.8K, 5%, 1/8W	1010801821
R15	POT. 500, 10% 3/4W, 15 TURNS	0338490078
R16	RESISTOR 680, 5%, 1/8W	1010806815
R17	RESISTOR 220, 10%, 1/4W	0171320000
R18	RESISTOR 180K, 5%, 1/8W	1010801848

*Installed on rear panel heat sink.

Figure 5.8.11 PC Assembly, 28V Regulator, 5 Amp 3A3A1, page 1 of 2.

R19	RESISTOR, 237K, 1%, 1/8W	1011310007
R20	RESISTOR, 4.7M, 10 %, 1/4W	1011330008
R21	RESISTOR 10K, 5%, 1/8W	1010801031
R22	RESISTOR 2.7M, 5%, 1/4W	1004900007
R23	RESISTOR 10K, 5%, 1/8W	1010801031
R24	RESISTOR 680, 10%, 1/4W	0176630007
R25	RESISTOR, 3.9K, 5%, 1/8W	1010803921
R19	RESISTOR, 237K, 1%, 1/8W	1011310007
R20	RESISTOR, 4.7M, 10 %, 1/4W	1011330008
R21	RESISTOR 10K, 5%, 1/8W	1010801031
R22	RESISTOR 2.7M, 5%, 1/4W	1004900007
R23	RESISTOR 10K, 5%, 1/8W	1010801031
R24	RESISTOR 680, 10%, 1/4W	0176630007
R25	RESISTOR, 3.9K, 5%, 1/8W	1010803921
R27	RESISTOR 390, 10%, 1/2W	0173260004
R28	RESISTOR 680, 10%, 1/4W	0176630007
R29	RESISTOR 2.2K, 10%, 1W	0164510001
R30	RESISTOR 5.6K, 5%, 1/8W	1010805622
R31	RESISTOR 4.7K, 5%, 1/8W	1010804723
R32	RESISTOR 2.2K, 5%, 1/4W	0178070009
T1	TOROID, SLOTTED, HALL EFFECT	1011040018
U1	IC. LINEAR LM340/7812	1003410022
U2	IC. LINEAR MC1723L	1010270036
U3	IC. DIGITAL 2501-1	1011000016
U4	IC. LINEAR LM311N	1005760021
U5	IC. LINEAR UGS3503	1011020017
U6	IC. DIGITAL ICL7665S	1010940007
U7	IC.LINEAR UA78L05 AWC	1010150014
XQ1	SOCKET, XSISTOR, TO-3, HI-PWR	1011220016

1153CP

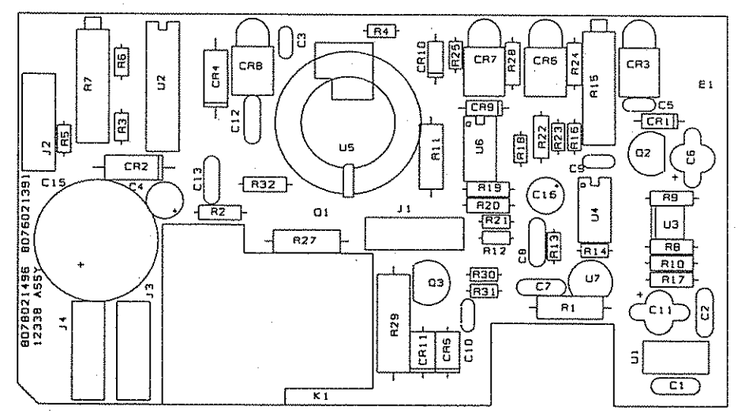

A2015B

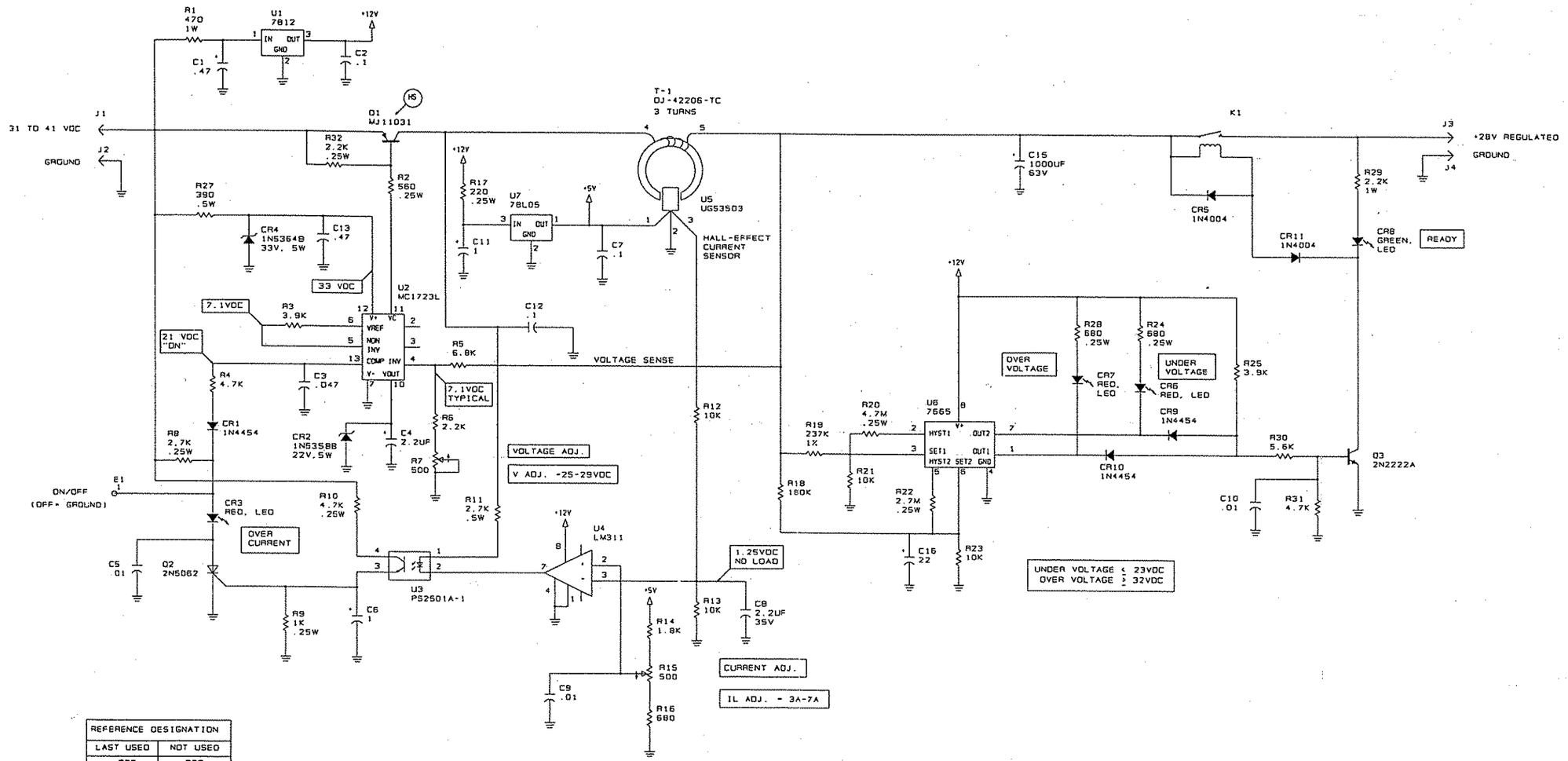

REFERENCE DESIGNATION	
LAST USED	NOT USED
R32	R26
CR11	
U7	
Q3	
C15	

Figure 5.8.11 PC Assembly, 28V Regulator, 5 Amp 3A3A1, page 2 of 2.

PC ASSY, 5/12 V REGULATORS 3A3A2

	PC ASSY, 5/12 V REGULATORS 3A3A2	8078025092
C1	CAP. 6800 µF, 63V, 20%, 105C	1010800019
C2	CAP. 6800 µF, 63V, 20%, 105C	1010800019
C3	CAPACITOR 0.1µF, 50V, X7R	1011180014
C4	CAP. 6.8µF, 50V, T350	1008980013
C5	CAP. 6.8µF, 50V, T350	1008980013
C6	CAPACITOR 0.1µF, 50V, X7R	1011180014
C7	CAP. 1µF, 35V, 196D	0281660000
C8	CAPACITOR 0.1µF, 50V, X7R	1011180014
C9	CAP. 6.8µF, 50V, T350	1008980013
C10	CAPACITOR 0.1µF, 50V, X7R	1011180014
C11	CAP. 10µF, 20V	1007290005
C12	CAP. 1µF, 35V, 196D	0281660000
C13	CAP. 10µF, 20V	1007290005
C14	CAP. 1µF, 35V, 196D	0281660000
C15	CAP. 1000µF, 63V, 20%, 105C	1011350009
C16	CAP. 1000µF, 63V, 20%, 105C	1011350009
CR1	DIODE, RECTIFIER 1N4004	0405180004
CR2	DIODE, ZENER 1N5242B	0400120003
CR3	DIODE, RECTIFIER 1N4004	0405180004
CR4	NOT USED	
CR5	DIODE, RECTIFIER 1N4004	0405180004
CR6	DIODE, RECTIFIER 1N4004	0405180004
CR7	DIODE, RECTIFIER 1N4004	0405180004
CR8	DIODE, RECTIFIER 1N4004	0405180004
CR9	DIODE, RECTIFIER 1N4004	0405180004
F1	FUSE, MDL, 1.5 AMP, 125V	0896540006
J1	CONNECTOR, HEADER, 26 PIN MALE	1010810022
J2	TERMINAL, PC MOUNT, 3/16" MALE	1008550027
J3	TERMINAL, PC MOUNT, 1/4" MALE	1008330035
J4	TERMINAL, PC MOUNT, 3/16" MALE	1008550027
J5	TERMINAL, PC MOUNT, 1/4" MALE	1008330035
J6	TERMINAL, PC MOUNT, 3/16" MALE	1008550027
J7	TERMINAL, PC MOUNT, 3/16" MALE	1008550027
J8	TERMINAL, PC MOUNT, 3/16" MALE	1008550027
K1	RELAY, SPST, 24VDC, PC MOUNT	1010310038
K2	RELAY, SPDT, 24V, REED	1003400001
L1	INDUCTOR, POWER, 180µH	1008690015
Q1	DIODE, TRANSZORB 1N5646A	1006680021
Q2	TRANSISTOR, NPN, SI. 2N2222A	0448580004
Q3	TRANSISTOR, NPN, SI. 2N2222A	0448580004
R1	RESISTOR 100, 10%, 1/2W	0174790007
R2	RESISTOR 10K, 10%, 1/4W	0170410005
R3	RESISTOR 5.6K, 10%, 1/4W	0183060008
R4	RESISTOR 100, 10%, 1/2W	0174790007
R5	RESISTOR 1K, 10%, 1/4W	0171560001
R6	RESISTOR 10K, 10%, 1/4W	0170410005
R7	RESISTOR 1050, 1%, 1/8W	1010620029
R8	RESISTOR 121, 1%, 1/8W	0195320000
R9	RESISTOR 374, 1%, 1/8W	1011030039
R10	RESISTOR 121, 1%, 1/8W	0195320000
XU1	SOCKET, TRANSISTOR TO-3	0841550000
XU2	SOCKET, TRANSISTOR TO-3	0841550000
	FUSECLIP, PC MOUNT	0534610005
	KEY, POLARIZING	1008070033
U1&U2	LM350K	1010600028

Figure 5.8.12 PC Assembly, 5/12V Regulators 3A3A2, page 1 of 2.

1169CP

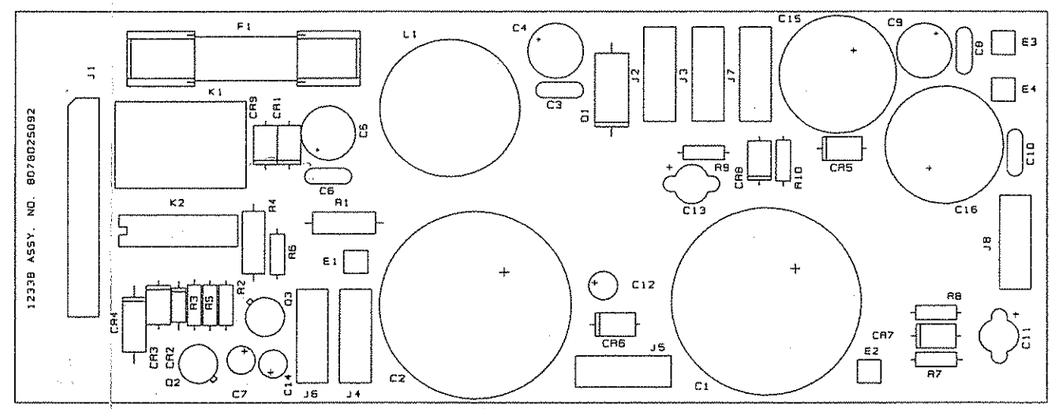

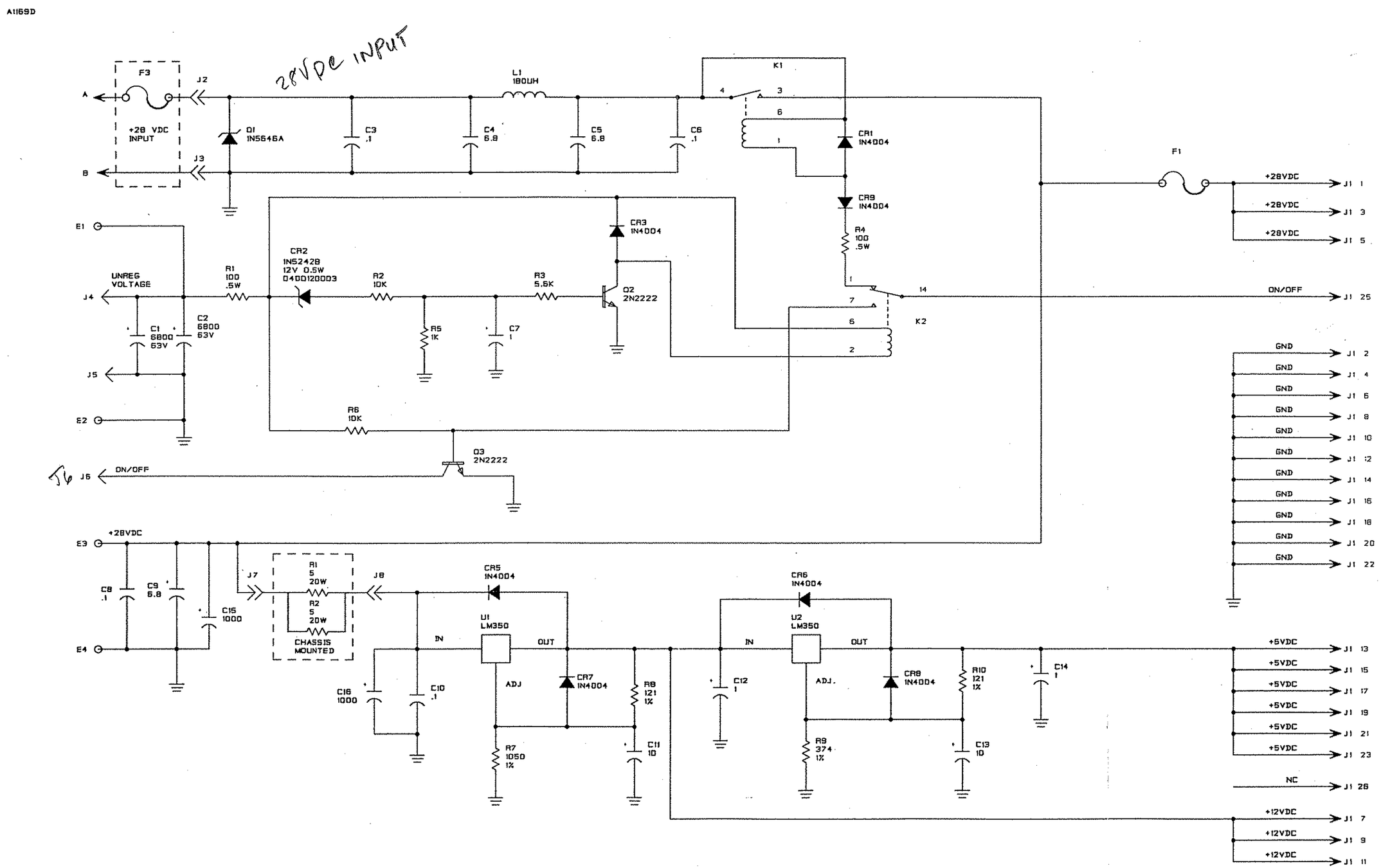

Figure 5.8.12 PC Assembly, 5/12V Regulators 3A3A2, page 2 of 2.

PC ASSY, AUDIO CONNECTORS 3A3A3

	PC ASSY, AUDIO CONNECTORS 3A3A3	8078018096
C1	CAP. .01µF, 50V, X7R 20%	0281730008
C2	CAP. .01µF, 50V, X7R 20%	0281730008
C3	CAP. .01µF, 50V, X7R 20%	0281730008
C4	CAP. .01µF, 50V, X7R 20%	0281730008
C5	CAP. .01µF, 50V, X7R 20%	0281730008
C6	CAP. .01µF, 50V, X7R 20%	0281730008
C7	CAP. .01µF, 50V, X7R 20%	0281730008
C8	CAP. .01µF, 50V, X7R 20%	0281730008
C9	CAP. .01µF, 50V, X7R 20%	0281730008
C10	CAP. .01µF, 50V, X7R 20%	0281730008
C11	CAP. .01µF, 50V, X7R 20%	0281730008
C12	CAP. .01µF, 50V, X7R 20%	0281730008
C13	CAP. .01µF, 50V, X7R 20%	0281730008
C14	CAP. .01µF, 50V, X7R 20%	0281730008
C15	CAP. .01µF, 50V, X7R 20%	0281730008
C16	CAP. .01µF, 50V, X7R 20%	0281730008
C17	CAP. .01µF, 50V, X7R 20%	0281730008
C18	CAP. .01µF, 50V, X7R 20%	0281730008
C19	CAP. .01µF, 50V, X7R 20%	0281730008
C20	CAP. .01µF, 50V, X7R 20%	0281730008
C21	CAP. .01µF, 50V, X7R 20%	0281730008
C22	CAP. .01µF, 50V, X7R 20%	0281730008
C23	CAP. .01µF, 50V, X7R 20%	0281730008
C24	CAP. .01µF, 50V, X7R 20%	0281730008
C25	CAP. .01µF, 50V, X7R 20%	0281730008
C26	CAP. .01µF, 50V, X7R 20%	0281730008
J1	CONNECTOR, HEADER, 20 PIN MALE	1011210207
J2	CONNECTOR, HEADER, 10 PIN MALE	1010800027
J3	CONNECTOR, POWER, 19 PIN, FEM	1011110008
J4	CONNECTOR, POWER, 10 PIN FEM	1010640020
ZS1	VARISTOR, MOV V230LA20A	1010720023
ZS2	VARISTOR, MOV V230LA20A	1010720023

1165AP

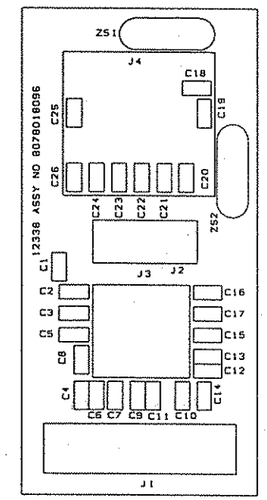

Figure 5.8.13 PC Assembly, Audio Connectors 3A3A3, page 1 of 2.

TEST PROCEDURE

REMOTE CONTROL UNIT

RCU-9310

				Prep. by		10/21/91
				Proj. Eng.		10/21/91
				Appr.		10/21/91
Sec.	Page	Rev.	Date		Name	Date

ENGINEERING SPECIFICATIONS

unair electronics, inc. HIALEAH, FLORIDA	TITLE TEST PROCEDURE REMOTE CONTROL UNIT	SPEC NO. 8078001223	ISSUE A
		PAGE 1 OF 7 PAGES	

1.0 APPLICABLE DOCUMENTS

1.1	BM Remote Contol Unit	80780012XX
1.2	Technical Manual	8078000502

2.0 EQUIPMENT REQUIRED (or equivalent).

2.1	Transceiver, RT-9000	
2.2	Multimeter	Simpson 260
2.3	Power Supply, 0-40 volts @ 30 amp.	HP-6269
2.4	Oscilloscope, 100 MHz bandwidth	Tektronix 465
2.5	Audio Generator	HP-200A/B
2.6	Audio Voltmeter	HP-400H
2.7	Microphone,	8076000602
2.8	Power Cord, 115 volt ac	8076002095
2.9	Power Cord, 230 volt ac	8076002192
2.10	Power Cord, dc	8076002290
2.11	Cw Key	5024000994
2.12	Headset	0840200005
2.13	Coaxial Cable with Phone plug	
2.14	Cable, RCU-9310 to Rt-9000	
2.15	Antenna Coupler, DCU-100	8080
2.16	Signal Generator	Wavetek 3000
2.17	50 ohm RF load w 250 W element	Bird 83
2.18	Coaxial T-connector	UG-274/U
2.19	RS-232/RS-422/Modem cable	
2.20	RS-485 cable	
2.21	Coaxial cables	
2.22	Remote audio test fixture	

3.0 PRELIMINARY

3.1 Visually inspect the RCU-9310 to be tested to be sure that all PC Boards and subassemblies are present.

3.2 Measure the resistance to ground at J4-11 on the mother board (28 vdc). This will typically exceed 500 ohms.

3.3 Turn the VOLUME and SQUELCH controls on the RCU-9310 front panel fully counter-clockwise.

3.4 Turn the power supply on and set the output to 28 volts dc.

3.5 Connect the AC power cord from a source of 155VAC, 60 Hz to the RCU-9310 under test. Set R15 on the 28 volt regulator fully clockwise.

3.6 Turn the volume control on the RCU-9310 clockwise until it clicks.

3.7 Measure the regulated 28 volts at J3 of the 28 volt regulator assembly and adjust R7 on the 28 volt regulator until the voltage is 28 volts dc.

3.8 Adjust R15 on the 28 volt regulator counter-clockwise until the OVERCURRENT LED on the 28 volt regulator illuminates. Set R15 back two full turns clockwise from this point.

3.9 Turn the VOLUME control counter-clockwise and connect the DC power cord to the RCU-9310 and the 28 volt power supply.

3.10 Connect the RS-232 cable and the Remote Audio cables between the RCU-9310 and the RT-9000.

4.0 CONTROL AND INDICATIONS TESTS

4.1 Turn the VOLUME control on the RCU-9310 clockwise until it clicks. The display backlighting should turn on, and various LED's in the RCU-9310 should illuminate for a period of approximately 1 second. During this period, the FAULT LED on the front panel will illuminate. After a delay for initializing the CPU, the FAULT LED should extinguish and all red LED's in the interior of the RCU-9310 should extinguish.

4.2 The information on the display should be as that which is indicated in the following table:

Frequency	RCV Blank
Channel	Random Channel
Meter Information	S3, S6, S9, +20,+40 +60
Function/Status	Random information, but the data displayed on the extreme right should be RMT.

In all cases, the information displayed should appear as English words, or as Numbers. There should be no garbage characters displayed.

4.3 Press the PNL LT button. The display backlighting should extinguish. Press the PNL LT button again. The backlighting should illuminate again.

4.4 The bottom section of the LCD display should show:

BFO, BITE, M CH --, ALE ID, MORE.

4.5 Press all the number keys on the keypad in sequence. Nothing should happen until the ENTR key is pushed, when a message should be displayed "FUNCTION DISALLOWED". This message will remain for several seconds and will be replaced by another message "UNIT IN REMOTE MODE", after which the display will appear as it was.

4.6 Press all the keys on the right hand section of the keypad except PNL LT and LCL REM. In each instance, the "FUNCTION DISALLOWED" and the "UNIT IN REMOTE MODE" messages should appear as explained above.

4.7 Select I/O MODEM on both the RT-9000 and the RCU-9310 and press the LCL REM key on the RCU-9310. The Function/Status display on the RT-9000 should change to indicate RMT and that of the RCU-9310 should indicate LCL. The frequency display of the RCU-9310 should change to echo the display of the RT-9000. It may happen that the RCU-9310 indicates that it is in manual channel mode while the RT-9000 is in channel. This is a normal occurrence and is not a cause for concern.

4.8 If the equipment is not in channel 0, select channel 0 from the RCU-9310 keypad. Load frequency 1.605 MHz. The frequency should be displayed on both the RCU-9310 and the RT-9000.

4.9 Load frequency 12.34567. The proper frequency should be displayed on both units.

4.10 From the IO menu on bath units, select RS-232 mode, 4800 baud. Load frequency 23.56789 MHz. This frequency should appear on both displays.

4.11 Press LOAD XMT and load frequency 24.35353. Press READ XMT on the RCU-9310 and verify that the above transmit frequency is displayed. On the RT-9000, press LCL RMT and verify that the proper transmit frequency has been entered.

4.12 Press LCL RMT on the RCU-9310 and set the mode to USB. Press the microphone push-to-talk switch and verify that the RT-9000 switches to transmit.

4.13 Select RS-422 mode from the IO menu on both units. Press the AGC pushbutton on the RCU-9310 keypad and verify that the AGC indication on both units is the same.

4.14 Set the frequency to 12.605 MHz simplex, and the mode to USB. Connect the signal generator to the antenna connector on the RT-9000 and set the generator output to CW mode, 100 microvolts, 1.606 MHz.

4.15 Select line audio A. Measure the remote receiver output level on the remote audio test fixture and adjust R8 on the Remote Audio Assembly of the RCU-9310 until the audio output is 0 dbm.

4.16 Remove the coaxial cable from the signal generator and connect it to the 50 ohm load. Connect the audio generator to remote transmit audio and set the generator to provide a signal of 1200 Hz at 0 dbm.

4.17 From the meter menu on the RCU-9310, select the transmit line audio meter and key the radio with the microphone. Adjust R1 on the remote audio assembly until the indication on the bar meter is 0 dbm. Unkey the radio.

4.18 Turn off the power to the RCU-9310 and disconnect all cables. Connect to a source of 115 vac and operate the RCU-9310 for a period of 24 hr.

4.19 At the conclusion of the 24 hr burn-in process, reconnect the cables and test the control functions of the RCU-9310 as outlined in steps 4.1 through 4.14.

THIS COMPLETES THE TEST

TEST DATA
RCU-9310

Date_____ Serial No._____

Technician _____ (stamp)

Controls and Indications _____ OK

Audio Output Level _____ dbm

Remote Audio In _____ ok

Vibration _____ ok

Burn-in _____ ok