TM-8078160500

AUDIO KEYLINE INTERFACE

MX-9360

OPERATION and MAINTENANCE MANUAL

SUNAIR 3101 SW Third Avenue, Ft. Lauderdale, FL 33315-3389

WARRANTY POLICY

GROUND AND MARINE PRODUCTS

Sunair Electronics warrants equipment manufactured by it to be free from defects in material or workmanship, under normal use for the lesser of one (1) year from the date of installation or 15 months from date of shipment by Sunair.

Sunair will repair or replace, at its option, any defective equipment or component of the equipment returned to it at its factory, transportation prepaid, within such warranty period. No reimbursement will be made for non-factory repair charges.

This warranty is void if equipment is modified or repaired without authorization, subject to misuse, abuse, accident, water damage or other neglect, or has its serial number defaced or removed.

THIS WARRANTY IS ESPECIALLY IN LIEU OF ANY AND ALL OTHER WARRANTIES EXPRESSED OR IMPLIED, INCLUDING ANY IMPLIED WARRANTY OF MERCHANTABILITY OR FITNESS FOR A PARTICULAR PURPOSE. The obligation and responsibility of Sunair shall be limited to that expressly provided herein and Sunair shall not be liable for consequential or other damage or expense whatsoever therefore or by any reason thereof.

Sunair reserves the right to make changes in design or additions to or improvements in its equipment without obligation to install such additions or improvements in equipment theretofore manufactured.

SUNAIR ELECTRONICS, INC.

SUNAIR

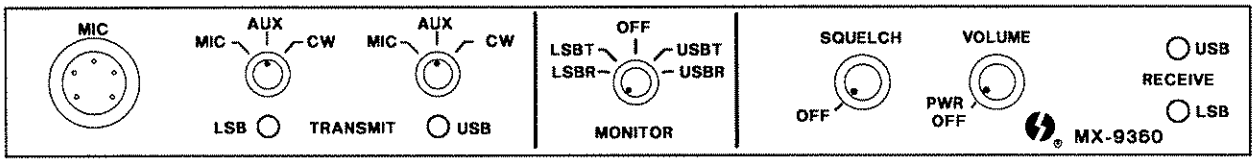

MX-9360

OPERATION AND MAINTENANCE MANUAL

FIRST EDITION AUGUST, 1995

PRODUCT SERVICE:

In case of difficulty please contact the Sunair Product Service Department, between the hours of 8:00 AM and 5:00 PM or write to:

Product Service Dept.
Sunair Electronics, Inc.
3101 SW Third Avenue
Ft. Lauderdale, FL 33315-3389
U.S.A.

Telephone: (305) 525-1505

Fax: (305) 765-1322

TRAINING:

Sunair offers training programs of varying lengths covering operation, service, and maintenance of all Sunair manufactured equipment. For details please contact the Product Support Department.

TABLE of CONTENTS

Section	Description	Page
I	**GENERAL INFORMATION**	
	1.1 SCOPE OF MANUAL	1-1
	1.2 PURPOSE OF EQUIPMENT	1-1
	1.3 GENERAL DESCRIPTION	1-1
	1.4 TECHNICAL SPECIFICATIONS	1-2
	1.4.1 GENERAL	1-2
	1.4.2 MICROPHONE	1-2
	1.4.3 LINE COMPENSATION AMPLIFIERS	1-2
	1.4.4 AUXILIARY AUDIO PORTS AUX RCV (J4) and AUX XMT (J5).	1-2
	1.4.5 SPEAKER DRIVER	1-2
	1.4.6 ENVIRONMENTAL	1-2
	1.5 EQUIPMENT SUPPLIED	1-2
	1.6 OPTIONS	1-3
II	**INSTALLATION**	
	2.1 GENERAL	2-1
	2.2 UNPACKING AND INSPECTION	2-1
	2.3 RETURN OF EQUIPMENT TO FACTORY	2-1
	2.4 GENERAL INSTALLATION AND MOUNTING INFORMATION	2-3
	2.4.1 GENERAL INSTALLATION	2-3
	2.4.2 MX-9360 INSTALLATION	2-3
	2.4.3 CONTROL AND AUDIO CABLE INSTALLATION	2-6
	2.4.4 TELEPHONE LINE INSTALLATION	2-6
	2.5 INSTALLATION ELECTRICAL ALIGNMENT	2-12
	2.5.1 MX-9360 ALIGNMENT PROCEDURE	2-12
	2.5.2 USB TRANSMIT AND RECEIVE AUDIO ALIGNMENT	2-12
	2.5.3 LSB TRANSMIT AND RECEIVE AUDIO ALIGNMENT	2-13

TABLE of CONTENTS (Cont...)

Section	Description	Page
III	**OPERATION**	
	3.1 GENERAL	3-1
IV	**THEORY OF OPERATION**	
	4.1 GENERAL	4-1
	4.2 REAR PANEL ASSEMBLY	4-1
	4.3 AUDIO ASSEMBLY	4-1
	4.3.1 RECEIVE AUDIO	4-2
	4.3.2 RECEIVE MONITOR AUDIO	4-2
	4.3.3 RECEIVE AUDIO SQUELCH	4-2
	4.3.4 TRANSMIT AUDIO	4-2
	4.3.5 POWER SUPPLY REGULATOR	4-2
	4.4 FRONT PANEL ASSEMBLY	4-3
	4.5 POWER SUPPLY ASSEMBLY	4-3
	4.6 DIGITAL INTERFACE ASSEMBLY	4-3
V	**MAINTENANCE AND REPAIR**	5-1
	5.1 GENERAL	5-1
	5.2 DISASSEMBLY	5-1
	5.2.1 TOP COVER REMOVAL	5-1
	5.3 ALIGNMENT, MX-9360	5-1
	5.3.1 POWER SUPPLY, AUDIO ASSEMBLY	5-1
	5.3.2 AUDIO LEVEL, RECEIVE	5-1
	5.3.3 AUDIO LEVEL, TRANSMIT	5-2
	5.3.4 FRONT PANEL MICROPHONE LEVEL	5-3
	5.3.5 CW OSCILLATOR LEVEL	5-3
	5.4 DIGITAL INTERFACE ASSEMBLY	5-3
	5.5 SCHEMATICS AND PARTS LISTS	5-3

LISTING of FIGURES

Section	Description	Page
II	**INSTALLATION**	
	Figure 2.4.2.1 MX-9360 Outline.	2-4
	Figure 2.4.2.2 Workstation Installation.	2-5
	Figure 2.4.3.1 MX-9360 System Interconnect Diagram.	2-8
	Figure 2.4.3.2 MX-9360 Rear Panel Diagram.	2-10
	Figure 2.4.4.1 Telephone Line Connection.	2-11
	Figure 2.5.1 MX-9360 System Audio Interconnect Diagram.	2-14
	Figure 2.5.2 MX-9360 Adjustments and Test Point Locations.	2-15
III	**OPERATION**	
	Figure 3.1 MX-9360 Front Panel Controls.	3-1
IV	**THEORY OF OPERATION**	
	Figure 4.1.1 MX-9360 Block Diagram.	4-4
V	**MAINTENANCE AND REPAIR**	
	Figure 5.3.1 MX-9360 Components, Controls and Adjustment Locations.	5-4
	Figure 5.5.1 Chassis Wiring.	5-5
	Figure 5.5.2 Front Panel Assembly, page 1/2.	5-6
	Figure 5.5.2 Front Panel Assembly, page 2/2.	5-7
	Figure 5.5.3 Audio Interface Assembly, page 1/4.	5-8
	Figure 5.5.3 Audio Interface Assembly, page 2/4.	5-9
	Figure 5.5.3 Audio Interface Assembly, page 3/4.	5-10
	Figure 5.5.3 Audio Interface Assembly, page 4/4.	5-11
	Figure 5.5.4 Rear Panel Assembly, page 1/3.	5-12
	Figure 5.5.4 Rear Panel Assembly, page 2/3.	5-13
	Figure 5.5.4 Rear Panel Assembly, page 3/3.	5-14
	Figure 5.5.5 Digital Interface Assembly, page 1/2.	5-15
	Figure 5.5.5 Digital Interface Assembly, page 2/2.	5-16

THIS PAGE INTENTIONALLY LEFT BLANK.

SECTION I

GENERAL INFORMATION

1.1 SCOPE OF MANUAL

This manual contains information necessary to install operate and maintain the MX-9360 Audio Keyline Interface. Installation information is located in Section II. Operating instructions are included in Section III. Theory of Operation is in Section IV. Section V contains maintenance and Troubleshooting guidelines. Information in this manual applies to all equipment configurations, unless otherwise stated in the text or illustrations.

1.2 PURPOSE OF EQUIPMENT

The MX-9360 is designed to provide an operator microphone/auxiliary audio interface facility between the workstation and the transmitter/receiver equipment.

1.3 GENERAL DESCRIPTION

The MX-9360 Audio Keyline Interface Assembly provides a convenient radio receiver and transmitter audio and keyline interface for use with a Workstation. The MX-9360 provides microphone audio, keyline control receive audio and receive squelch capability. The unit may operate half or full duplex and supports single sideband and independent sideband operation. Telephone line amplifiers are also included to compensate for line loss experienced over the telephone lines in long distance remote control systems.

1.4 TECHNICAL SPECIFICATIONS

1.4.1 GENERAL

Input Power: 115/230 VAC 50-60 Hz.

Size: 1.75" H x 14" W x 15" D.

Weight: 9 lbs.

1.4.2 MICROPHONE

Suitable for use with Sunair handheld microphone and headset.

1.4.3 LINE COMPENSATION AMPLIFIERS

Receive Line Loss compensation: -30 dB maximum. Adjustable.

Transmit Line Level: 0 dBm. Adjustable.

THIS PAGE INTENTIONALLY LEFT BLANK.

SECTION II

INSTALLATION

2.1 GENERAL

This section contains all necessary instructions for unpacking, inspection, and, if required, reshipment of the equipment or parts. Information regarding location and mounting considerations, power requirements, and equipment interconnection is also provided.

2.2 UNPACKING AND INSPECTION

As soon as you have received your unit(s), unpack and inspect all components and accessories. Check the packing list to be sure you have received all items ordered, and that all items necessary for operation have been ordered.

NOTE: Be sure to retain the carton and its associated packing materials should it be necessary to reship the equipment.

Do not accept a shipment when there are visible signs of damage to the cartons until a complete inspection is made. If there is a shortage of items or any evidence of damage, insist on a notation to that effect on the shipping papers before signing the receipt from the carrier. If concealed damage is discovered after the shipment has been accepted, notify the carrier immediately in writing and await his inspection before making any disposition of the shipment. A full report should also be forwarded to Sunair's Product Services Department. Please be sure to include the following information for prompt service:

a) ORDER NUMBER.
b) MODEL AND SERIAL NUMBER.
c) NAME OF TRANSPORTATION AGENCY.
d) APPLICABLE DATES.

Upon receipt of this information, Sunair will make arrangements for repair or replacement.

2.3 RETURN OF EQUIPMENT TO FACTORY

The shipping carton for the MX-9360 has been designed to protect the equipment during shipment. The container and its associated packing material should be used to reship the unit.

When necessary to return equipment to Sunair for warranty or non-warranty repair, an authorization number is required. This number can be obtained from our Product Services Department:

TELEPHONE: (305) 525-1505,

FACSIMILE: (305) 765-1322.

If the original shipping carton is not available, be sure to carefully pack each unit separately, using suitable cushioning material where necessary. Very special attention should be given to providing enough packing

material around connectors and other protrusions from the unit. Rigid cardboard should be placed at the corners of the equipment to protect against denting. DO NOT USE DUNNAGE (e.g., STYROFOAM PEANUTS) FOR PACKING PROTECTION; they may allow the unit to shift while being shipped, and, therefore, become damaged.

When returning subassemblies or components for repair or replacement, be sure to pack each separately, using suitable cushioning material.

Shipment to be made PREPAID consigned to:

Sunair Electronics, Inc.
Product Services Department
3101 SW Third Avenue
Fort Lauderdale, Florida 33315-3389
U.S.A.

Plainly mark with indelible ink all mailing documents as follows:

US Goods Returned for Repair
Value For Customs - $ (Amt.)

Mark ALL SIDES of the package:

FRAGILE - ELECTRONIC EQUIPMENT!

NOTE: Before shipping, carefully inspect the package to be sure it is marked properly and is securely wrapped.

2.4 GENERAL INSTALLATION AND MOUNTING INFORMATION

Satisfactory operation of this equipment will depend upon the care and thoroughness taken during installation.

Before starting installation, carefully plan equipment locations to ensure that the operating environment is suitable and that adequate access for maintenance is provided.

2.4.1 GENERAL INSTALLATION

Use this manual in conjunction with the Workstation and radio equipment manuals for complete installation information.

Install the Digital Interface Assembly, 8078450095 in the Workstation. Refer to the Workstation operation and maintenance manual for information on installing accessory devices. Note: Workstation(s) supplied by Sunair generally have the Digital Interface Assembly factory installed.

See Section V, Maintenance and Repair, paragraph 5.4 Digital Interface Assembly, for information on I/O Map Address switch programming and PC bus decoding of the Digital Assembly.

2.4.2 MX-9360 INSTALLATION

Install the MX-9360 at the PC Workstation site. Place the MX-9360 on top of the Workstation. Place the Workstation monitor on top of the MX-9360. See Figure 2.4.2.1, MX-9360 Outline and Figure 2.4.2.2, Workstation Installation.

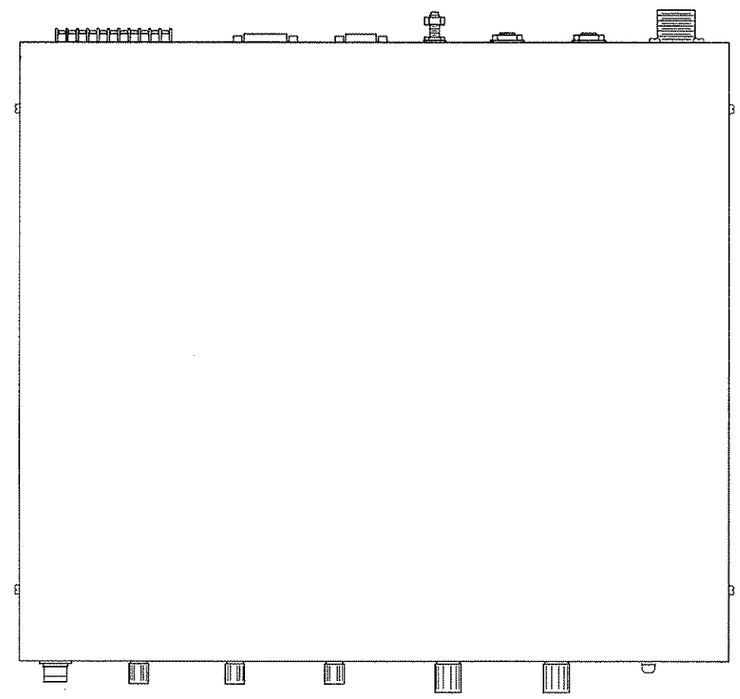

Figure 2.4.2.1 MX-9360 Outline.

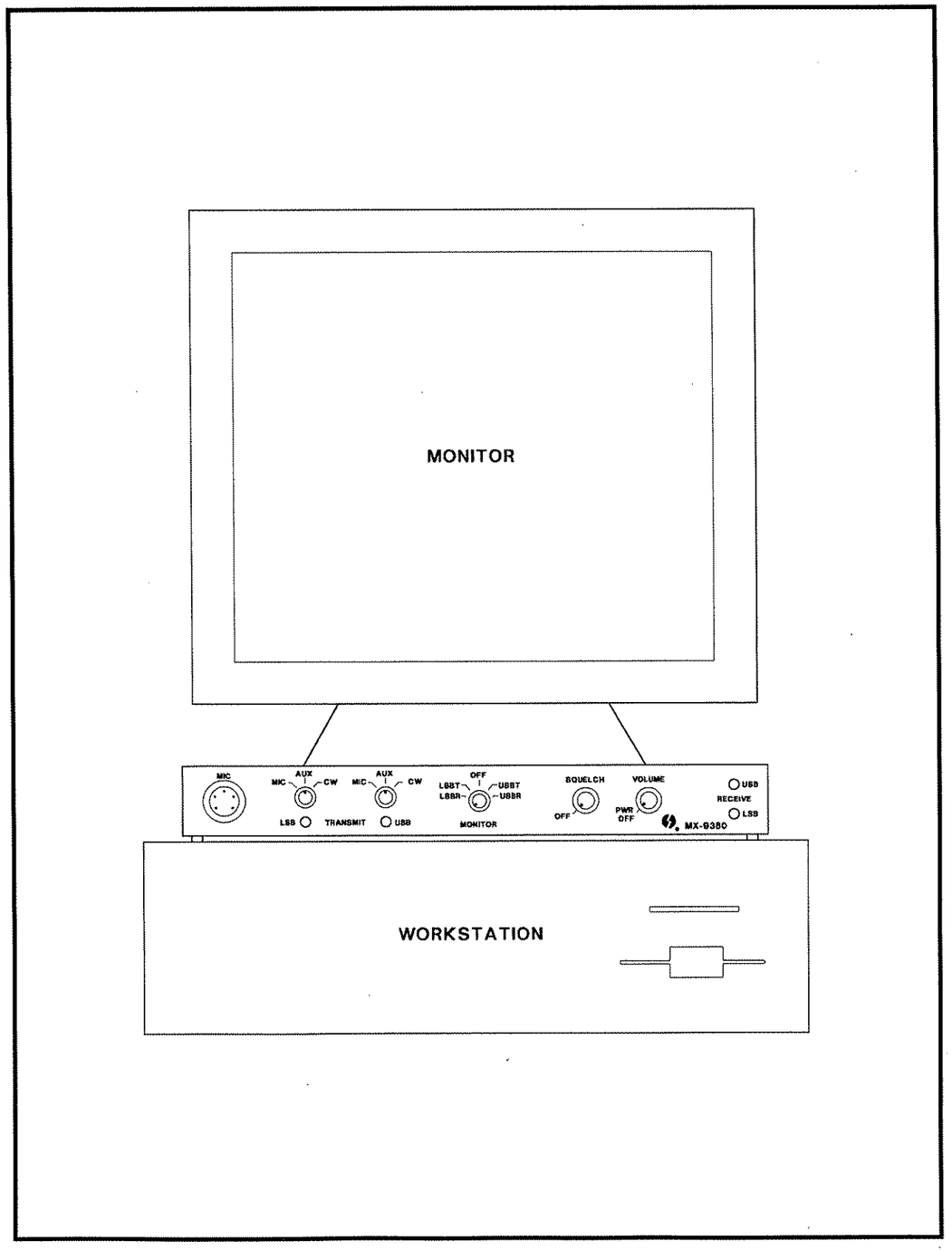

Figure 2.4.2.2 MX-9360 Workstation Installation.

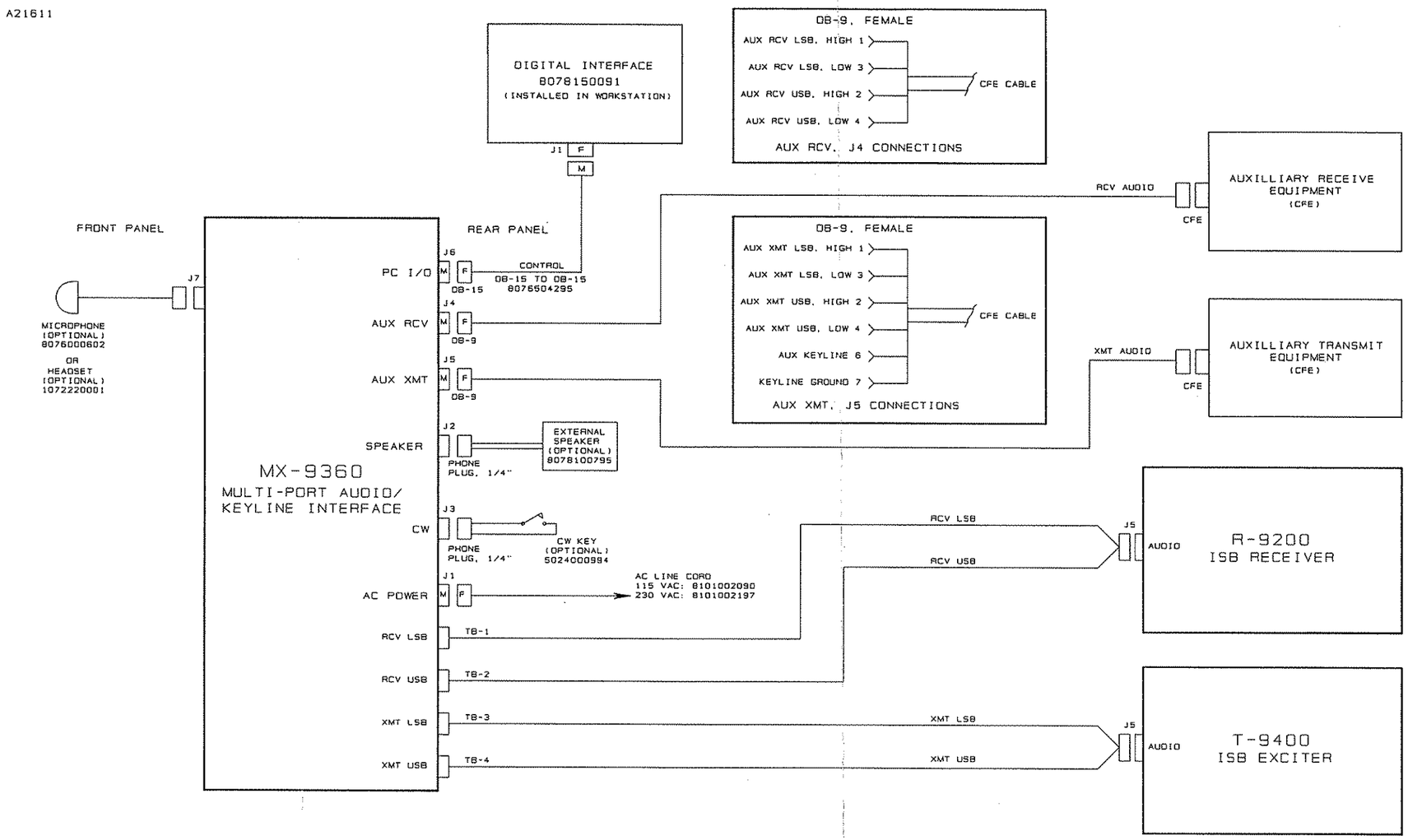

NOTES: A) CONNECTORS FOR MX-9360 J4 AND 5 INCLUDED IN MX-9360 CONNECTOR KIT. CABLE AND CFE CONNECTORS MUST BE SUPPLIED BY THE CUSTOMER UNLESS OTHERWISE NOTED

Figure 2.4.3.1 MX-9360 System Interconnect Diagram.

THIS PAGE INTENTIONALLY LEFT BLANK.

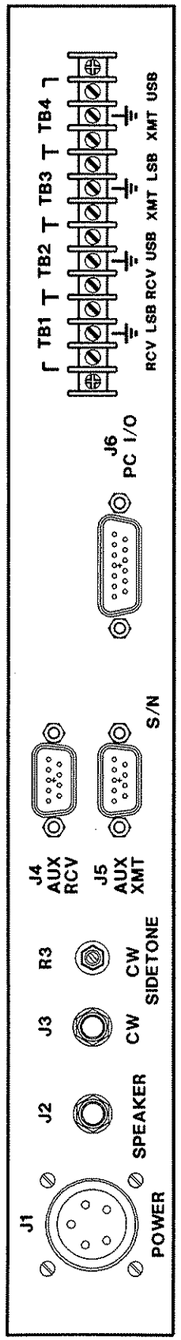

Figure 2.4.3.2 MX-9360 Rear Panel Diagram.

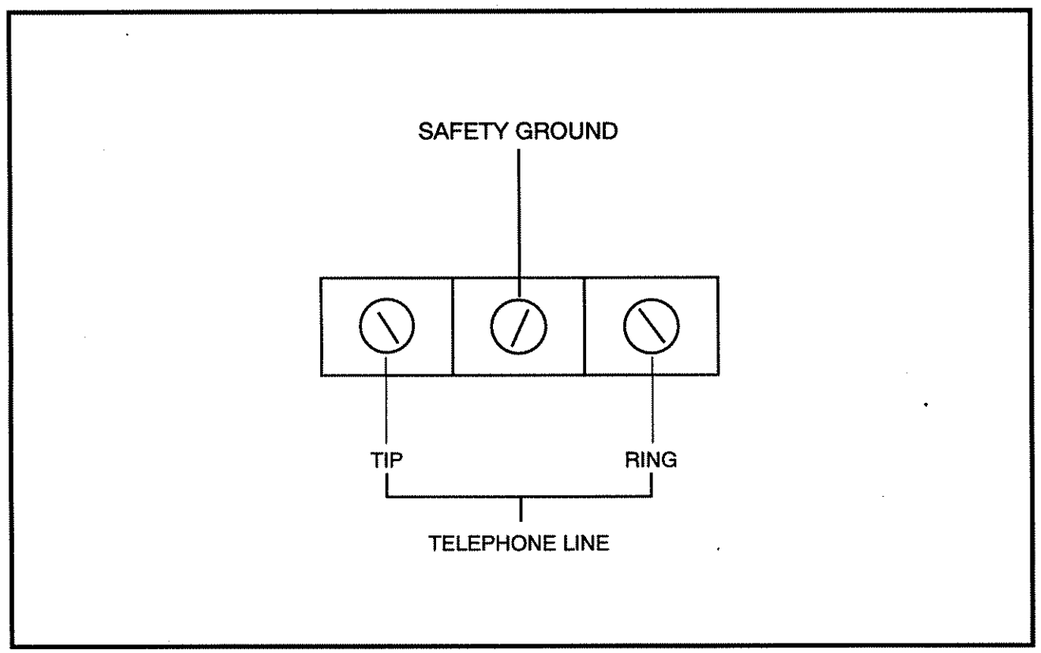

Figure 2.4.4.1 Telephone Line Connection.

2.5 INSTALLATION ELECTRICAL ALIGNMENT

Figure 2.5.1 MX-9360 System Audio Interconnect Diagram illustrates the transmit/receive data audio. Typical audio levels are shown at each equipment input and output port. The MX-9360 is designed to compensate for line-loss experienced over the telephone lines. When properly adjusted the MX-9360 will deliver or accept 0 dBm line levels to the auxiliary audio equipment.

2.5.1 MX-9360 ALIGNMENT PROCEDURE

The MX-9360 has been factory adjusted for 0 dBm in, on the receive lines and 0 dBm out, on the transmit lines. If these levels are not satisfactory, perform the following alignment procedure. See Figure 2.5.2, MX-9360 Adjustment and Test Point Locations for the location of controls and test points.

a) Remove the top cover of the MX-9360.

b) Turn the MX-9360 power on. See Section III for location and operation of the front panel controls.

NOTE: The following adjustments require an AC VTVM or oscilloscope.

2.5.2 USB TRANSMIT AND RECEIVE AUDIO ALIGNMENT

a) USB Transmit Audio: USB transmit audio is factory adjusted for 0 dBm on the telephone line. Normally, no further adjustments are required. If a different level is desired complete the following procedure.

1) Insert a 1 kHz, 0 dBm test tone on the auxiliary transmit audio line. (Note: If a Modem is connected to the Auxiliary position its internal test tone generator may be suitable for this test.)

2) Measure TP-2 with a AC VTVM and Adjust R15, "XMT OUTPUT LEVEL" for the desired level.

b) USB Receive Audio: USB receive audio is factory adjusted for 0 dBm on the HF receive telephone line. If a different line level is required complete the following procedure.

1) Receiver Site: Set the receiver to 4.999 MHZ USB a 1 kHz test should be present in the receiver speaker. The receive line audio line meter should indicate 0 dBm when configured for direct wire connection or telephone line operation. If the desired levels are not obtained see the R-9200 manual for 600 ohm receive audio level adjustment procedures.

2) MX-9360 Site: Measure TP-11 with a AC VTVM, adjust R88, "HF RECEIVE LEVEL" for 300 mv ppk/ 106 mv rms at TP-11. If there is insufficient range in R88, additional gain can be achieved by selecting "GAIN" configuration jumpers JP4 (5:1) and JP5 (1:1). When TP-11 is properly set the "AUX USB 600 OHM RECEIVE" audio test point TP-7 should indicate 0 dBm. The level at TP-7 may be adjusted by R100 "USB RECEIVE OUTPUT LEVEL". Do not adjust R100 until the level at TP-11 has been satisfactorily achieved.

2.5.3 LSB TRANSMIT AND RECEIVE AUDIO ALIGNMENT

a) LSB Transmit Audio: LSB transmit audio is factory adjusted for 0 dBm on the telephone line. Normally no further adjustments are required. If a different level is desired complete the following procedure.

1) Insert a 1 kHz, 0 dBm test tone on the LSB auxiliary transmit audio line. (Note: If a Modem is connected to the Auxiliary position its internal test tone generator may be suitable for this test.)

2) Measure TP-4 with a AC VTVM and Adjust R 50, "LSB XMT OUTPUT LEVEL" for the desired level.

b) LSB Receive Audio: LSB receive audio is factory adjusted for 0 dBm on the HF LSB receive telephone line. If a different line level is required complete the following procedure.

1) Receiver Site: Set the receiver to 5.001 MHZ LSB a 1 kHz test should be present in the receiver speaker. The receive line audio line meter should indicate 0 dBm when configured for direct wire connection or telephone line operation. If the desired levels are not obtained see the R-9200 manual for 600 ohm receive audio level adjustment procedures.

2) MX-9360 Site: Measure TP-8 with a AC VTVM, adjust R122, "LSB HF RECEIVE LEVEL" for 300 mv ppk/ 106 mv rms at TP-8. If there is insufficient range in R122, additional gain can be achieved by selecting "GAIN" configuration jumpers JP2 (5:1) and JP3 (1:1). When TP-8 is properly set, the "AUX 600 OHM LSB RECEIVE" audio test point TP-9 should indicate 0 dBm. The level at TP-9 may be adjusted by R132 "LSB RECEIVE OUTPUT LEVEL". Do not adjust R132 until the level at TP-8 has been satisfactorily achieved.

A21621

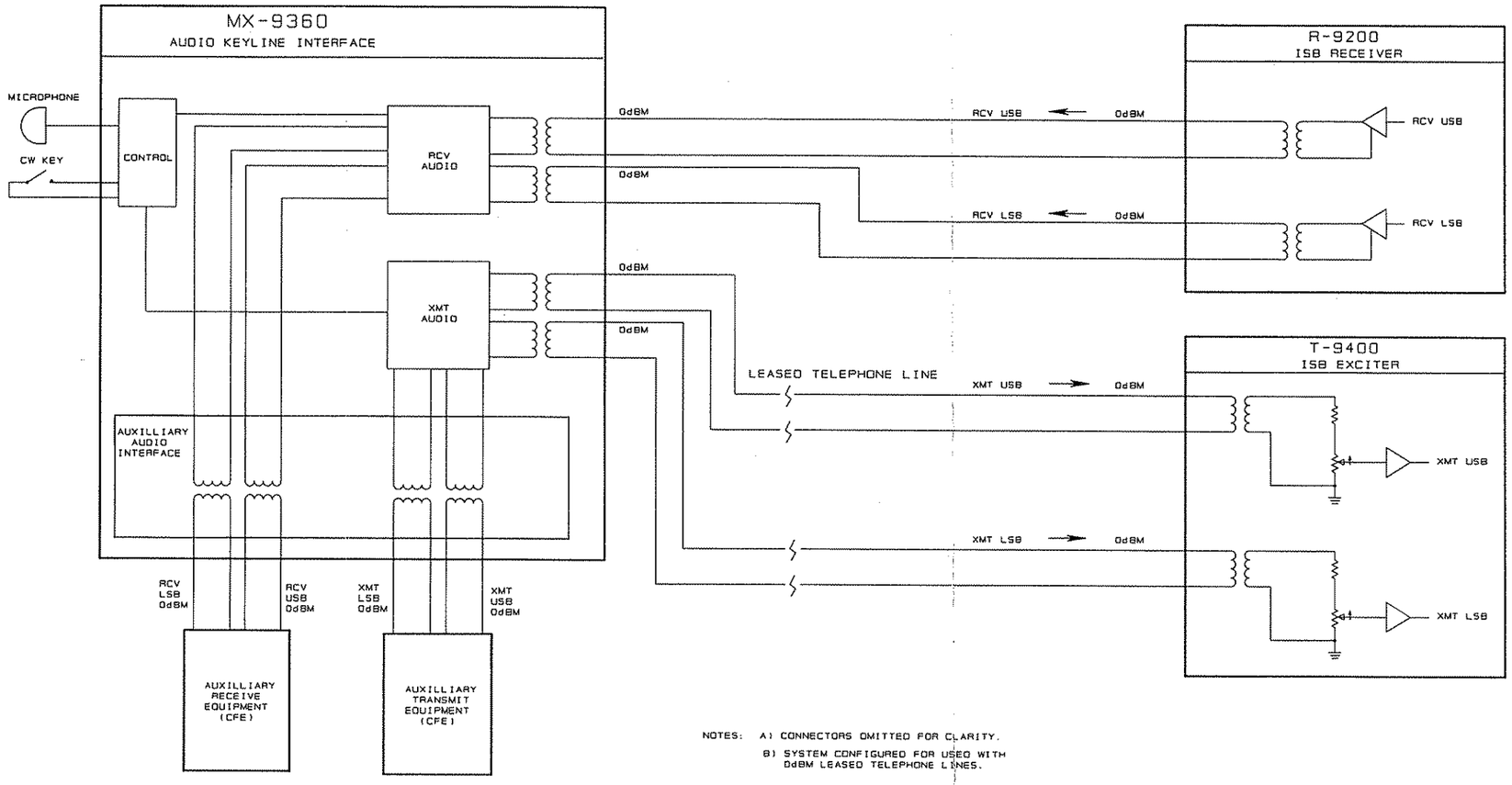

Figure 2.5.1 MX-9360 System Audio Interconnect Diagram.

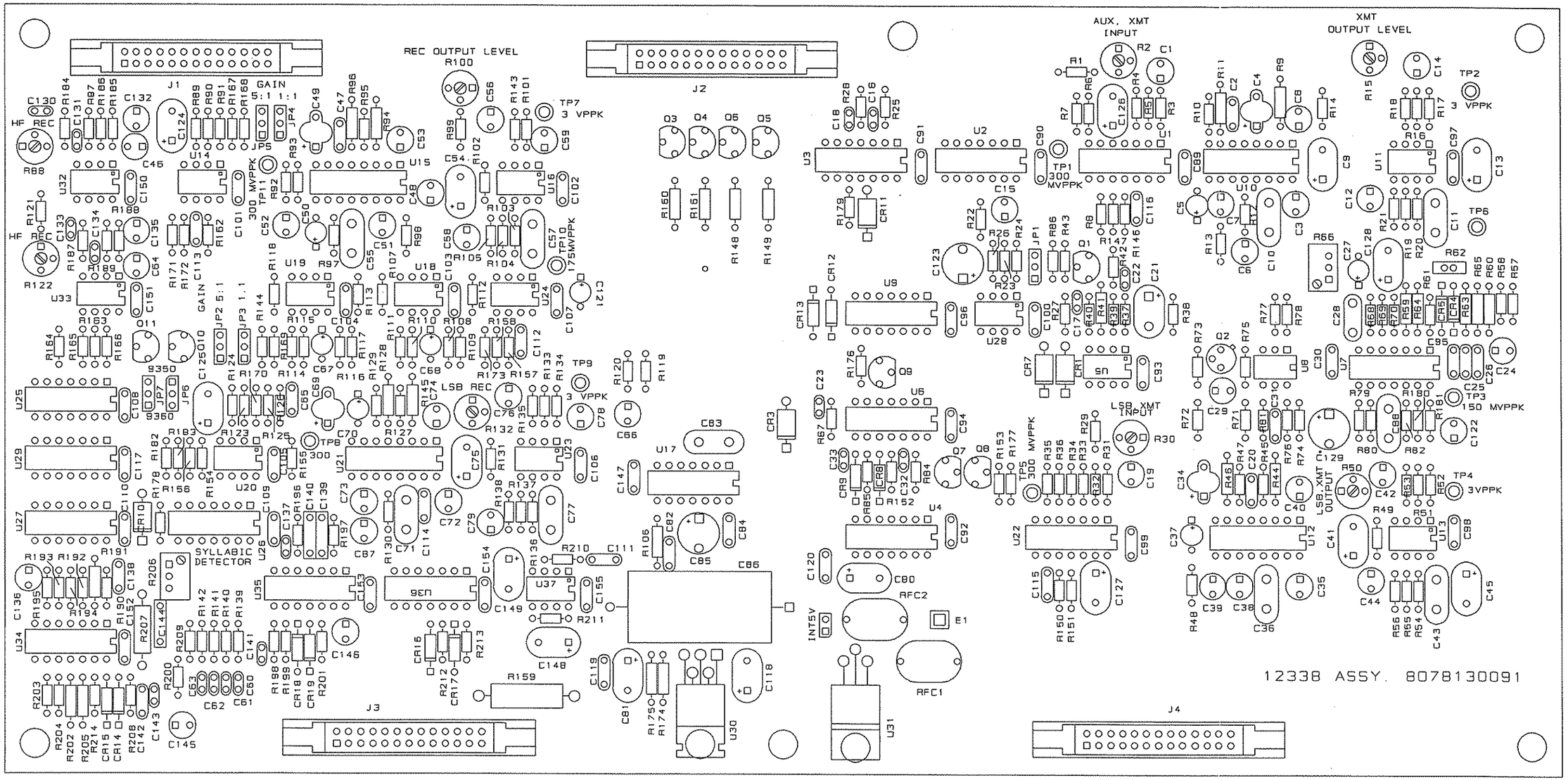

Figure 2.5.2 MX-9360 Adjustments and Test Point Locations.

THIS PAGE INTENTIONALLY LEFT BLANK.

SECTION III

OPERATION

3.1 GENERAL

This section describes the location and use of the MX-9360 front panel controls and indicators. Refer to Figure 3.1.

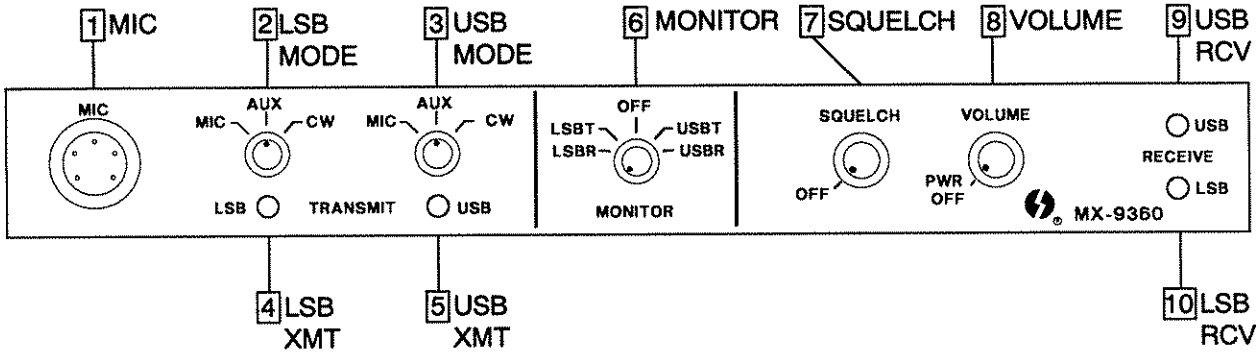

[1] MIC

The "MIC" position provides a five-position audio connector, U-183/U for microphone audio and keyline.

Sunair handheld microphone assembly PN: 8076000602 is suitable for use in this location.

The microphone connector pins are defined as:

A: Mic Audio Return
D: Mic Audio
C: PTT
B: Handset Audio
E: CW Keyline

[2] LSB MODE

The "LSB MODE" switch selects the desired operating mode for lower sideband.

CW: Selects CW transmit operation.

AUX: Selects auxiliary audio operation.

MIC: Selects front panel microphone operation.

[3] USB MODE

The "USB MODE" switch selects the desired operating mode for upper sideband.

CW: Selects CW transmit operation.

AUX: Selects auxiliary audio operation.

MIC: Selects front panel microphone operation.

[4] LSB XMT LAMP

The "LSB" transmit lamp will illuminate when the transmitter is in the LSB or ISB mode.

[5] USB XMT LAMP

The "USB" transmit lamp will illuminate when the transmitter is in the USB or ISB mode.

[6] MONITOR

The "MONITOR" switch permits the operator to monitor the transmit and receive audio activity appearing on the selected sideband position.

[7] SQUELCH CONTROL

When this control is in the fully counter-clockwise position the equipment is unsquelched. To enable the squelch, turn the control clockwise to the desired threshold (signal level to unsquelch receiver). The greater the clockwise setting of the control, the greater the signal level required to open the squelch.

[8] VOLUME CONTROL

When this control is in the full counter clockwise position, the equipment is off. To apply power, turn the control clockwise. Once on, the audio signal level to the external speaker or microphone headset facility are initially at minimum. Greater speaker audio is achieved by advancing the volume control clockwise to a comfortable listening level.

[9] USB RCV LAMP

The "USB" receive lamp will illuminate when the receiver is in the USB or ISB mode.

[10] LSB RCV LAMP

The "LSB" receive lamp will illuminate when the receiver is in the LSB or ISB mode.

SECTION IV

THEORY OF OPERATION

4.1 GENERAL

The theory of operation is presented in four sections:

1) Rear Panel Assembly.

2) Audio Assembly.

3) Front Panel Assembly.

4) Power Supply Assembly.

The MX-9360 (ISB full duplex system) and MX-9350 (SSB simplex system) use a common Audio assembly for each unit. The USB and LSB transmit and receive section of this assembly are used with the MX-9360. The LSB transmit and receive sections are not used in the MX-9350.

Refer to the MX-9360 block diagram, Figure 4.1.1 and schematics in Section V.

4.2 REAR PANEL ASSEMBLY

The Rear Panel assembly provides a wire interface facility to the rear panel connector apron. The assembly also contains the auxiliary audio coupling transformers, telephone line coupling transformers and telephone line protection circuits.

Auxiliary audio transformers T3, T4, T7 and T8 couple the MX-9360 to the external auxiliary audio equipment.

Line coupling transformers T1, T2, T5 and T6 and associated telephone line protection circuitry couple the MX-9360 to the telephone lines.

4.3 AUDIO ASSEMBLY

The Audio assembly provides telephone loss compensation amplifiers, 600 ohm auxiliary transmit and receive amplifiers, keyline level translator, microphone amplifier, CW oscillator, squelch and speaker driver. The Audio assembly may operate single channel transceive or dual channel full duplex operation.

Single channel operation (SSB transceive) is available in the MX-9350 and dual channel operation (ISB full duplex) is available in the MX-9360.

NOTE: The following discussion refers to the MX-9360 USB channel operation. The principles of USB operation apply to LSB operation.

4.3.1 RECEIVE AUDIO

HF receive audio supplied by the telephone line is level adjusted by "RCV LEVEL" control R88 and amplified by amplifier U32-A and U14-A. The output of U14-A is supplied to line compressor U15 which maintains the HF receive audio at a constant level. The leveled output is supplied to level control R100, "RECEIVE OUTPUT LEVEL". R100 is normally adjusted for 0 dBm out on the 600 ohm Auxiliary line driver amplifier. U16-A and U16-B provide the Auxiliary 600 ohm line driver amplifier.

4.3.2 RECEIVE MONITOR AUDIO

The HF receive audio and HF receive Auxiliary audio can be monitored at the loud speaker or headset audio facility. Receive audio from buffer amplifier U14-B is routed by audio switch facility U25-A, D, U29-A, B and control logic U26-A, B and U27. The switched audio is supplied to audio summing amplifier U18-B and U24-B. The output of U24-B is supplied to the volume control high-side contact and the input to the squelch detector circuity. The wiper output of the volume supplies audio to the speaker driver amplifier, U17. The output of U17 drives the rear panel speaker jack and the front panel headset facility.

4.3.3 RECEIVE AUDIO SQUELCH

The squelch circuit is a true Syllabic type which operates on voice characteristics and rejects other types of receive audio, such as noise, data, etc. The receiver audio is sampled and amplified by buffer amplifier U34-A. The amplified audio is supplied to limiter U34-B which squares the audio signal. The squared audio is applied to one shot, U35-A and U35-B. The output of the one shot is filtered by loss-pass filter R198, 200, C141, C143 and U34-D. The filtered output of U34-D contains the FM signal that appears in human speech. This signal is applied to the full-wave rectifier, U34-C. The output of U34-C triggers the audio switch timer composed of U35-D and U35-C. When the timer is triggered, audio switch U36-A is enabled which permits audio to appear in the rear panel speaker and front panel headset facility.

4.3.4 TRANSMIT AUDIO

HF transmit audio supplied by the auxiliary modem or front panel microphone facility. The auxiliary modem audio is level adjusted by "AUX INPUT LEVEL" control R2 and buffered by amplifier U1-A and controlled by switch U2-A, B and U1-B. The output of U1-B is supplied to line compressor U10 which maintains the HF transmit audio at a constant level. The leveled output is supplied to level control R15, "XMT OUTPUT LEVEL". R15 is normally adjusted for -9 dBm out on the telephone line. U11-A and U11-B are configured for telephone, 600 ohm line driver service.

Microphone audio is amplified by amplifier U28-A and is controlled by audio switch U2-D. The output of switch U2-D, U2-B and U2-C couples the microphone audio to buffer amplifier U1-B.

CW audio is generated by Wein bridge oscillator, U7-A and audio switch U7-B, C and U8. The output of U7-C is amplified by U7-D and sidetone buffer amplifier U24-B. Switch U29-A couples the CW audio to the speaker driver. The output of U7-C and switch U9-A places CW audio in the transmit audio path.

4.3.5 POWER SUPPLY REGULATOR

Switch +12 VDC is applied to low-drop-out regulator U30. U30 regulates the +12 VDC to 10 VDC. All amplifier, half-rail supplies, switch and logic functions are powered by the +10 VDC supply with the exception of the +5 VDC required by the PC I/O functions.

An auxiliary +5 VDC regulator is provided if +VDC is not available from the PC. This power supply is enabled by connecting jumper "INT5V".

4.4 FRONT PANEL ASSEMBLY

The Front Panel assembly provides a wire interface facility to the controls, switches and indicators located on the front panel. The Front Panel assembly interfaces to the Audio assembly by connectors.

4.5 POWER SUPPLY ASSEMBLY

The power supply assembly supplies regulated +12 VDC to all MX-9360 assemblies. The power supply operates from 90 VAC to 240 VAC. The power supply is a commercial-off-the-shelf assembly and contains no user serviceable components.

4.6 DIGITAL INTERFACE ASSEMBLY

The Digital Interface Assembly for the MX-9350 or the MX-9360 system is configured to operate in a Workstation at address 300 HEX. Set programming switch SW1 positions 1 and 2 "OFF" and positions 3, 4, 5 and 6 "ON". The keyline will be read from the port, and the T/R indicators should be written to the port.

In the absence of any keyline activity, the value read from this port should be 3EH (62 decimal). Bit 0 is permanently tied low on the pc board and can serve to indicate that the board is present. The Microphone keyline is Bit 7, and the CW key is Bit 6. Each of these indicates the keyed condition by a high on the appropriate bit.

Outputs to the port are for controlling the Transmit and Receive LED's. In receive, Bit 7 should be high and Bit 5 should be low. In transmit, Bit 7 should be low and Bit 5 should be high.

THIS PAGE INTENTIONALLY LEFT BLANK.

5.3.4 FRONT PANEL MICROPHONE LEVEL

a) Inject a 1 KHz test tone at -20 dBm into the front panel microphone connector. See Figure 5.5.1 for MIC connector wiring information.

b) Enable the Microphone keyline.

c) Measure TP1. TP1 should measure 300 mv ppk.

5.3.5 CW OSCILLATOR LEVEL

a) Enable the CW key.

b) Measure TP6 and adjust R66, "OSCILLATOR LEVEL" for 1 V ppk.

c) Measure TP3, it should measure 150 mv ppk.

d) Disable the CW key. The signal at TP3 should be reduced by at least -40 dB.

5.4 DIGITAL INTERFACE ASSEMBLY

The Digital Interface Assembly for the MX-9350 or the MX-9360 system is configured to operate in a Workstation at address 300 HEX. Set programming switch SW 1 positions 1 and 2 "OFF" and positions 3, 4, 5 and 6 "ON". The keyline will be read from the port, and the T/R indicators should be written to the port.

In the absence of any keyline activity, the value read from this port should be 3EH (62 decimal). Bit 0 is permanently tied low on the pc board and can serve to indicate that the board is present. The Microphone keyline is Bit 7, and the CW key is Bit 6. Each of these indicates the keyed condition by a high on the appropriate bit.

Outputs to the port are for controlling the Transmit and Receive LED's. In receive, Bit 7 should be high and Bit 5 should be low. In transmit Bit 7 should be low and Bit 5 should be high.

5.5 SCHEMATICS AND PARTS LISTS

The following pages contain schematics and parts lists for the MX-9360.

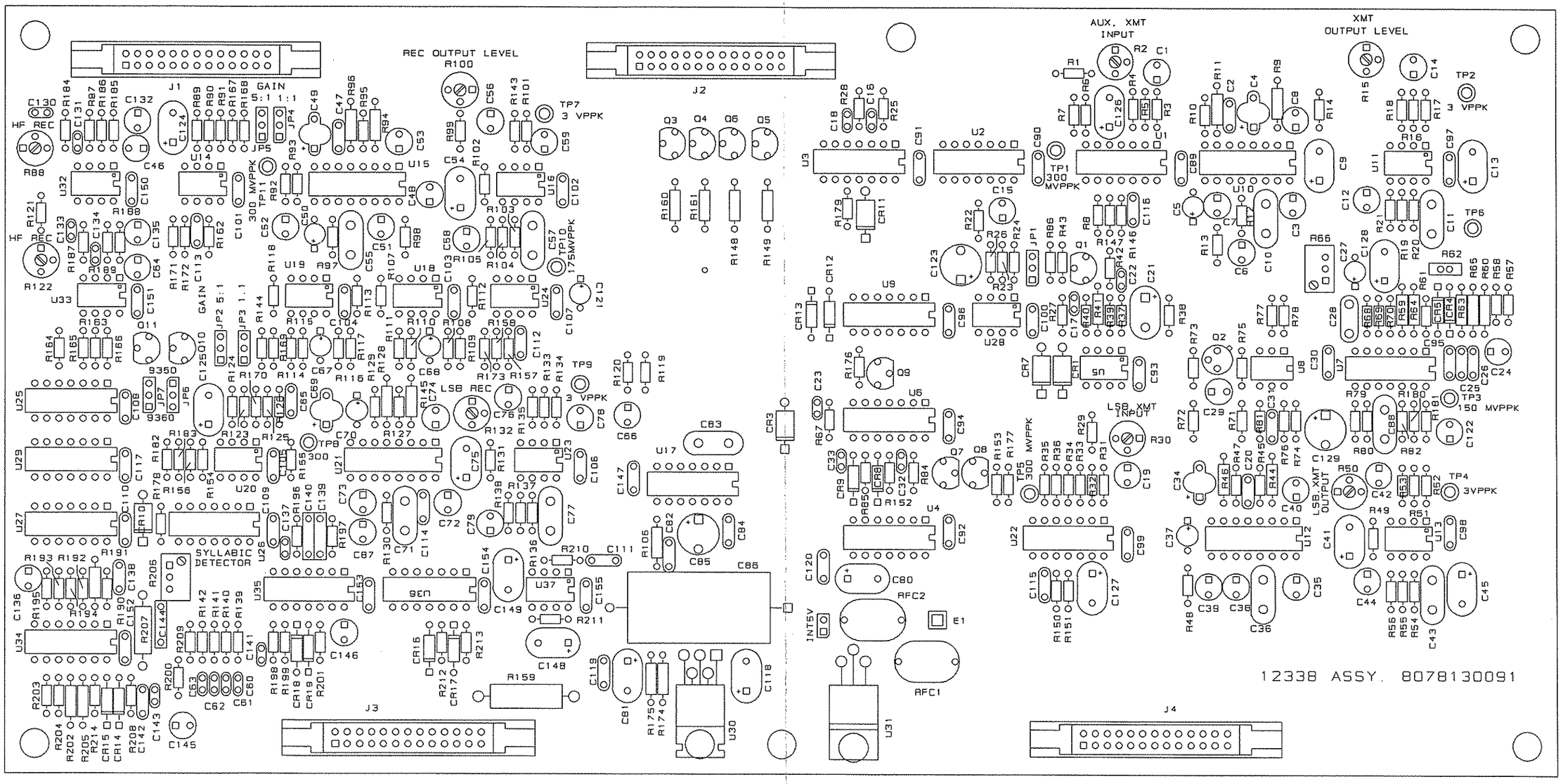

Figure 5.3.1 MX-9360 Components, Controls and Adjustment Locations.

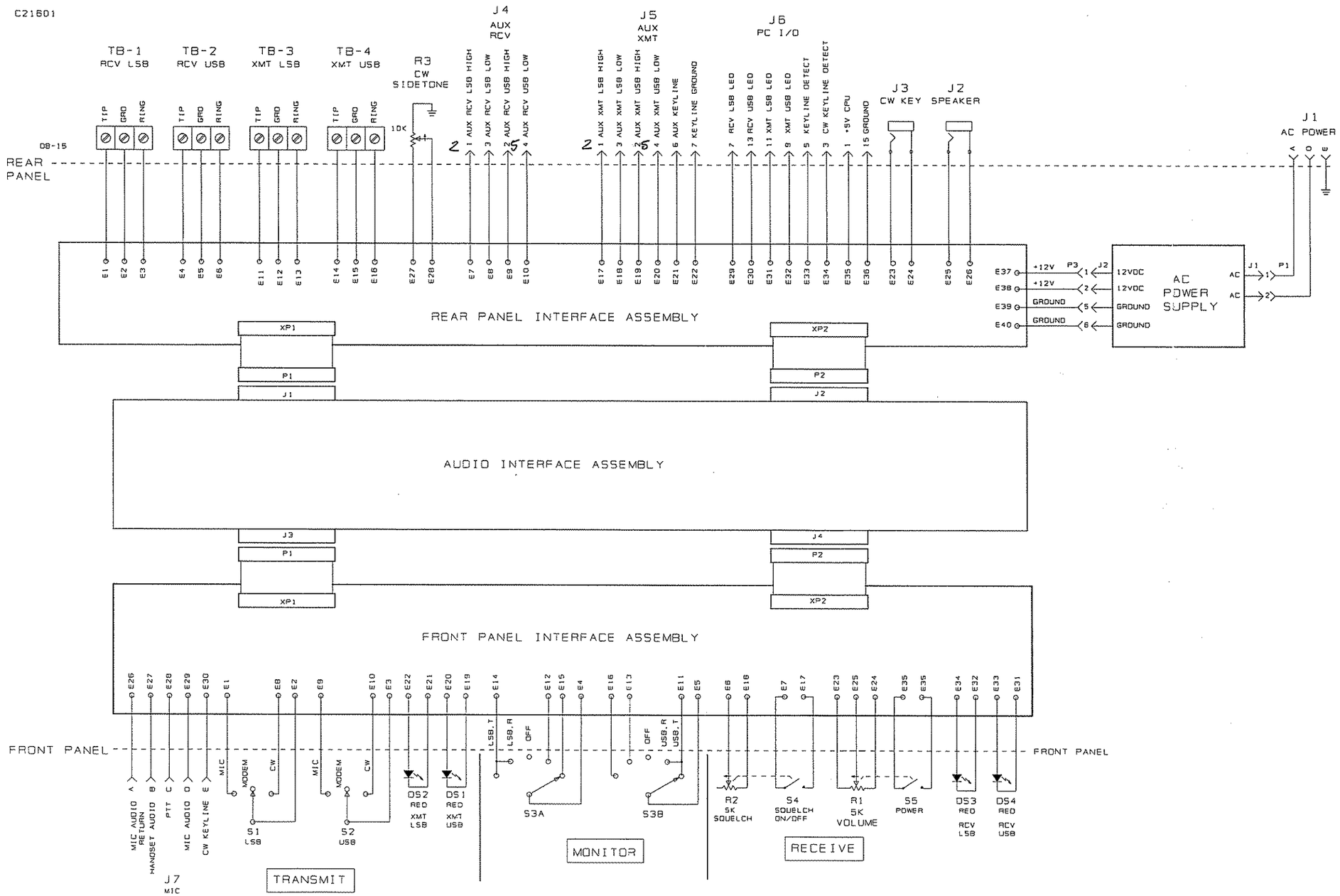

Figure 5.5.1 Chassis Wiring.

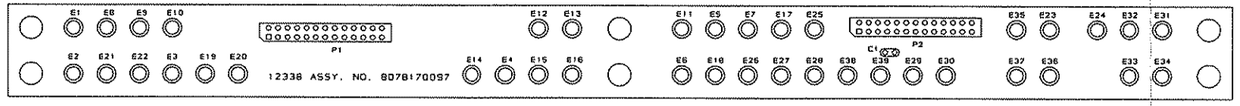

Figure 5.5.2 Front Panel Assembly, page 1/2.

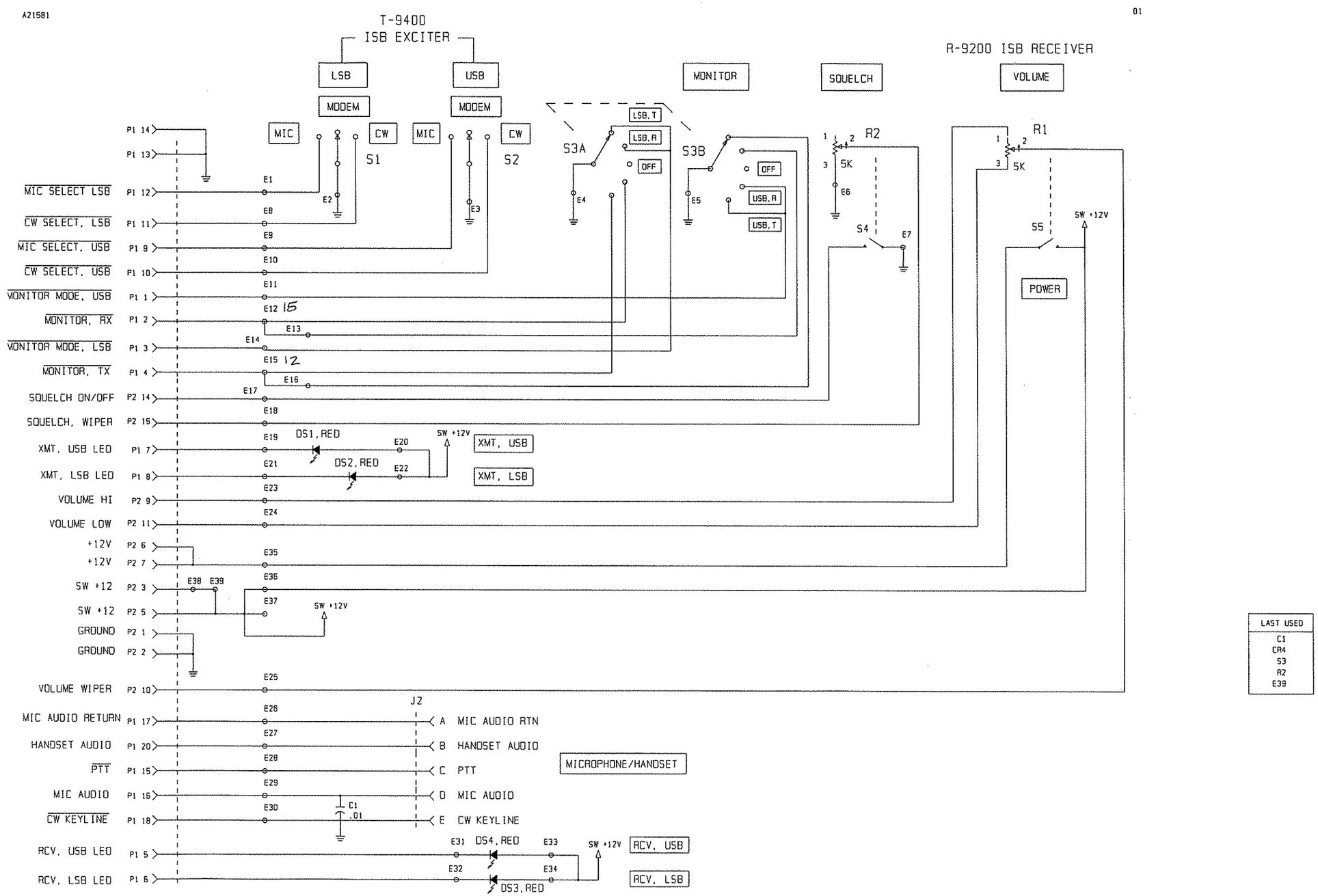

Figure 5.5.2 Front Panel Assembly, page 2/2.

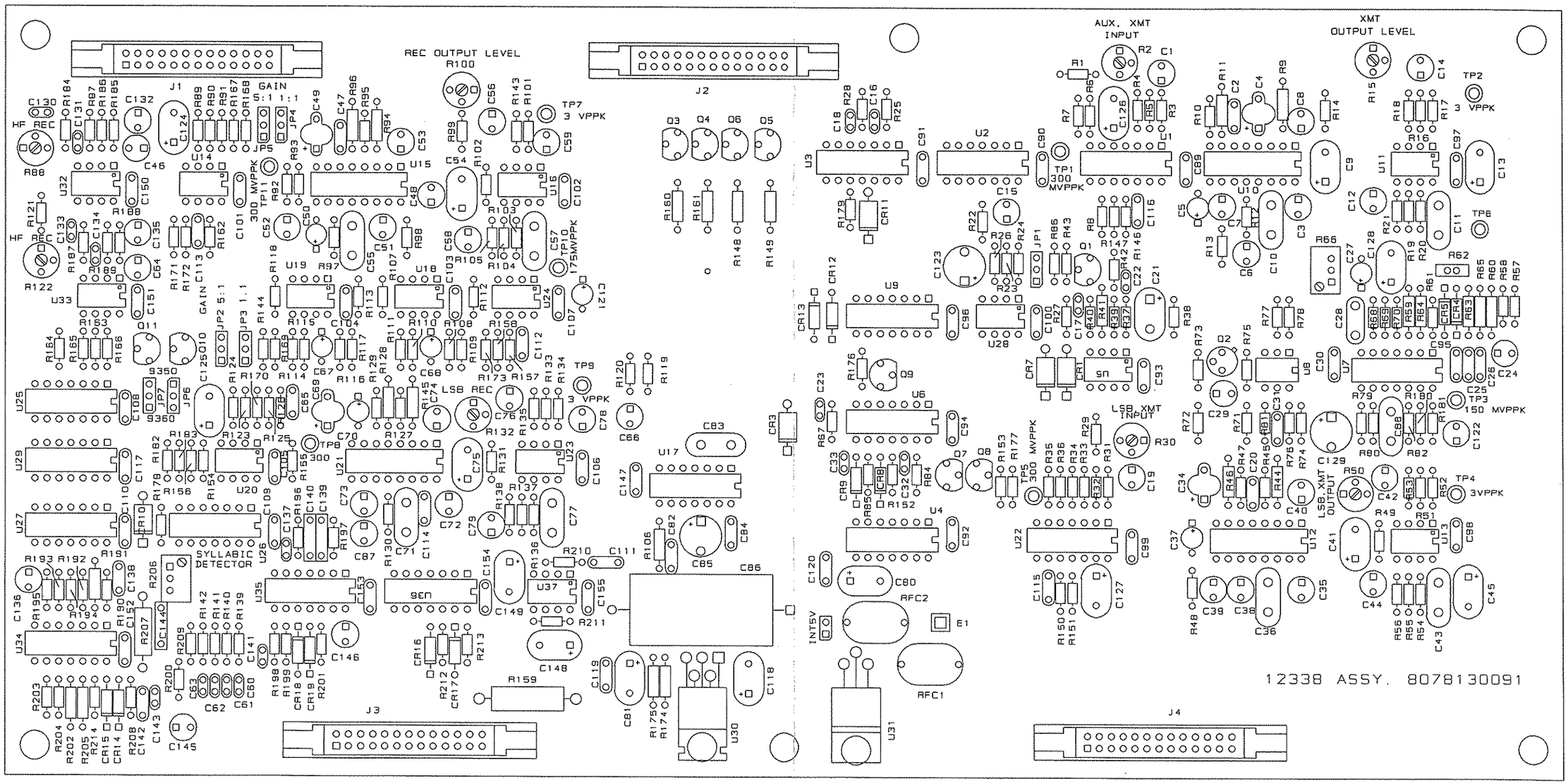

Figure 5.5.3 Audio Interface Assembly, page 1/4.

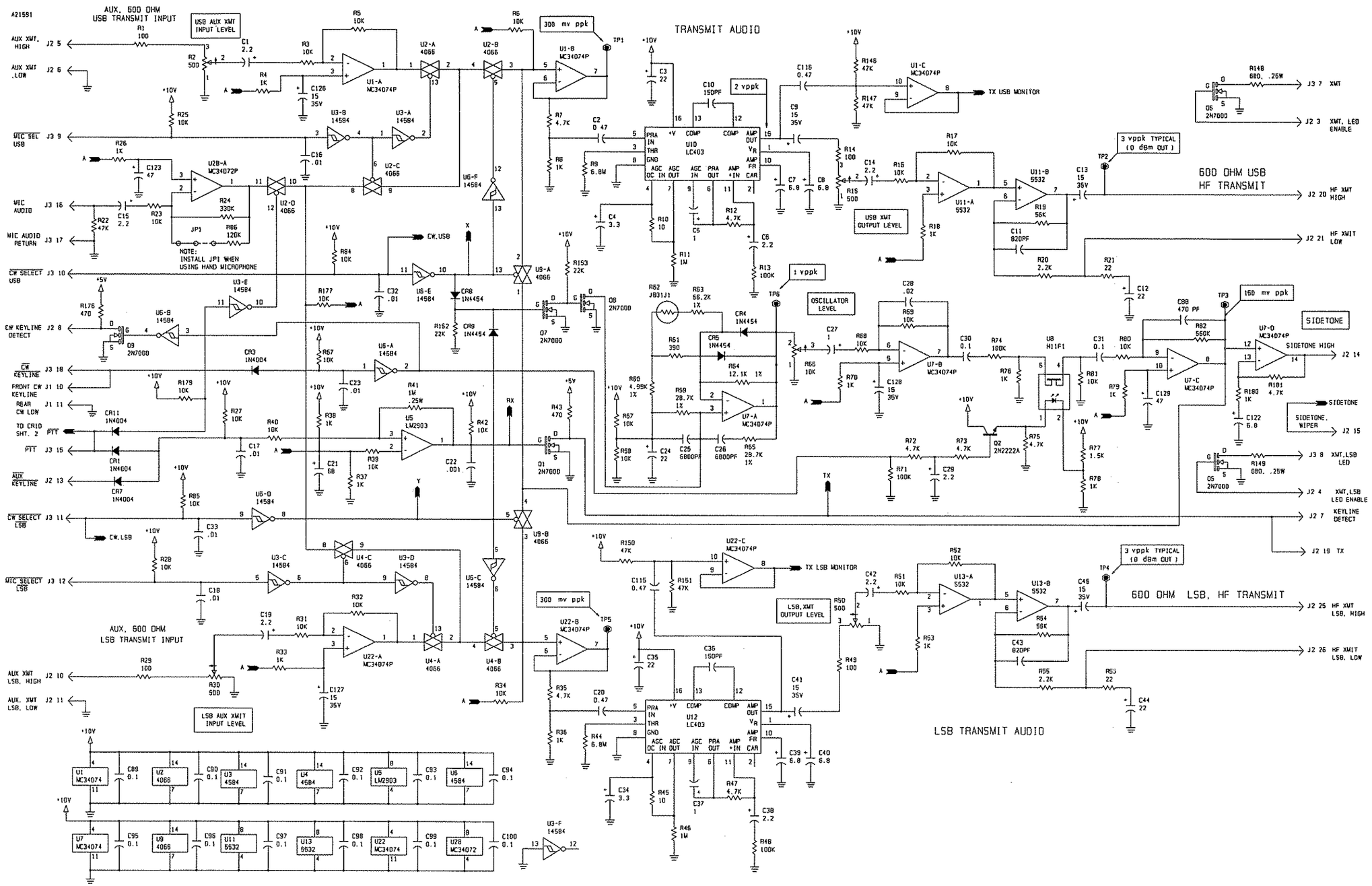

Figure 5.5.3 Audio Interface Assembly, page 2/4.

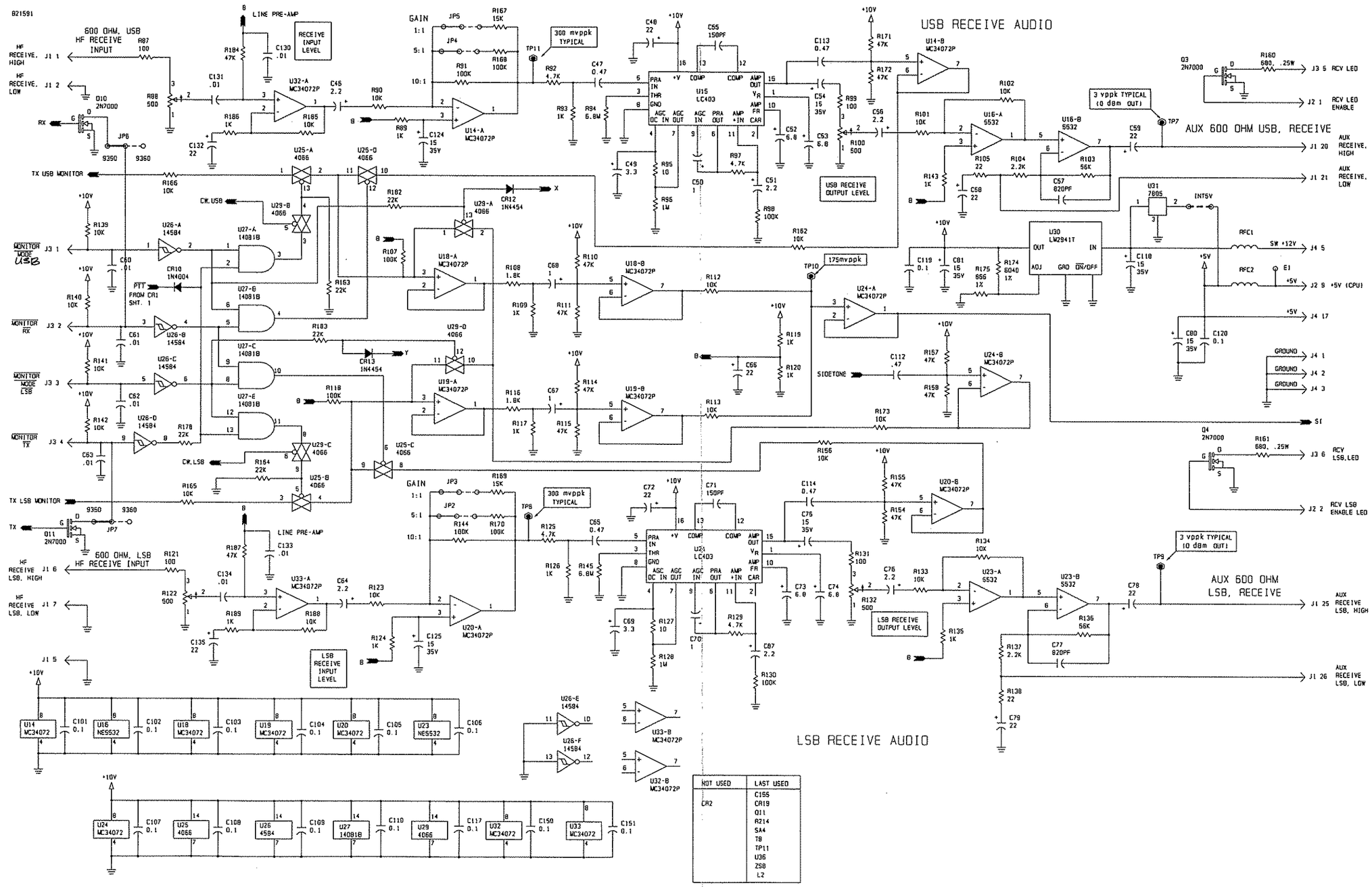

Figure 5.5.3 Audio Interface Assembly, page 3/4.

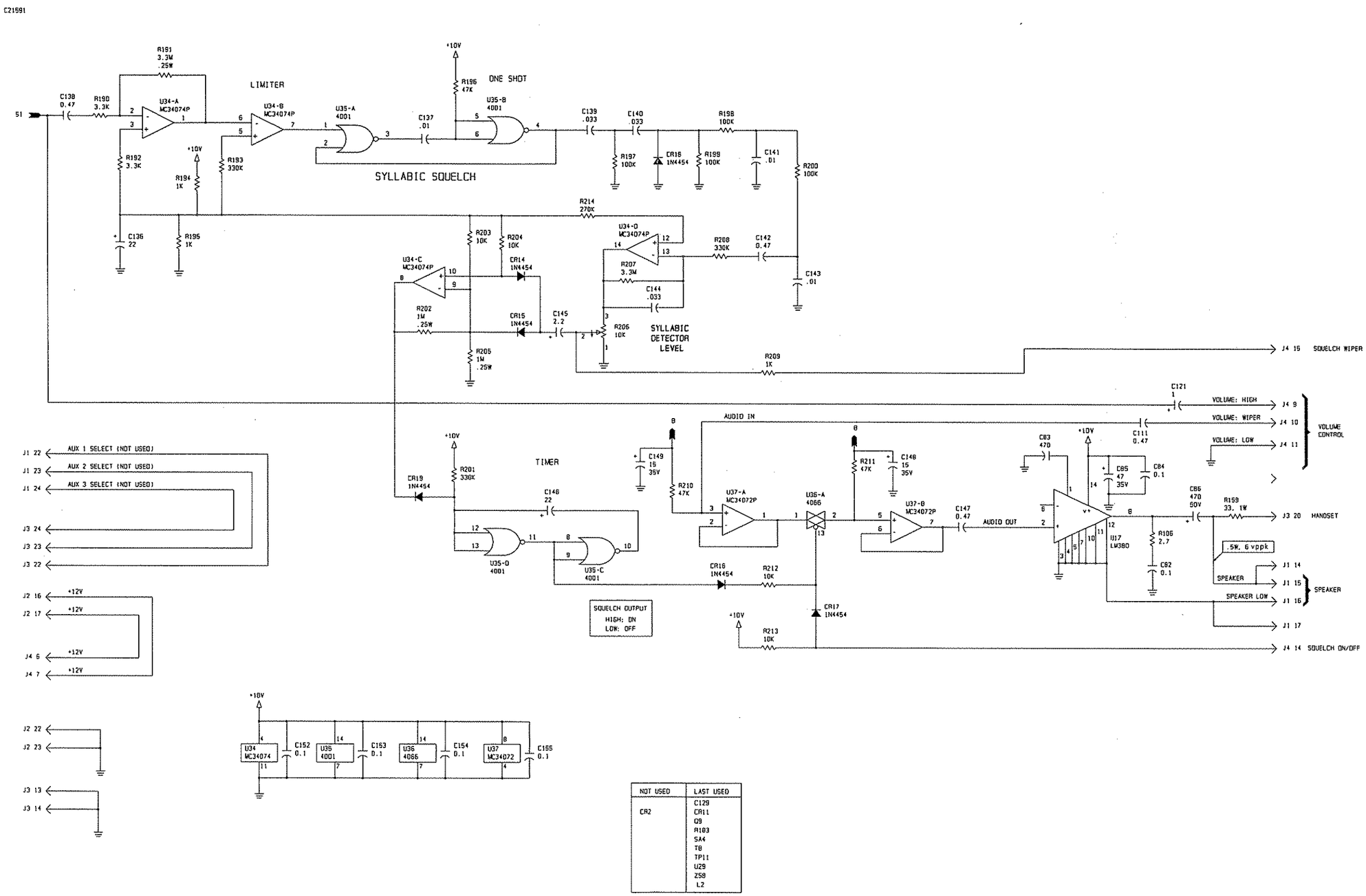

NOT USED	LAST USED
CR2	C129 CR11 Q9 R103 SA4 T8 TP11 U29 Z59 L2

Figure 5.5.3 Audio Interface Assembly, page 4/4.

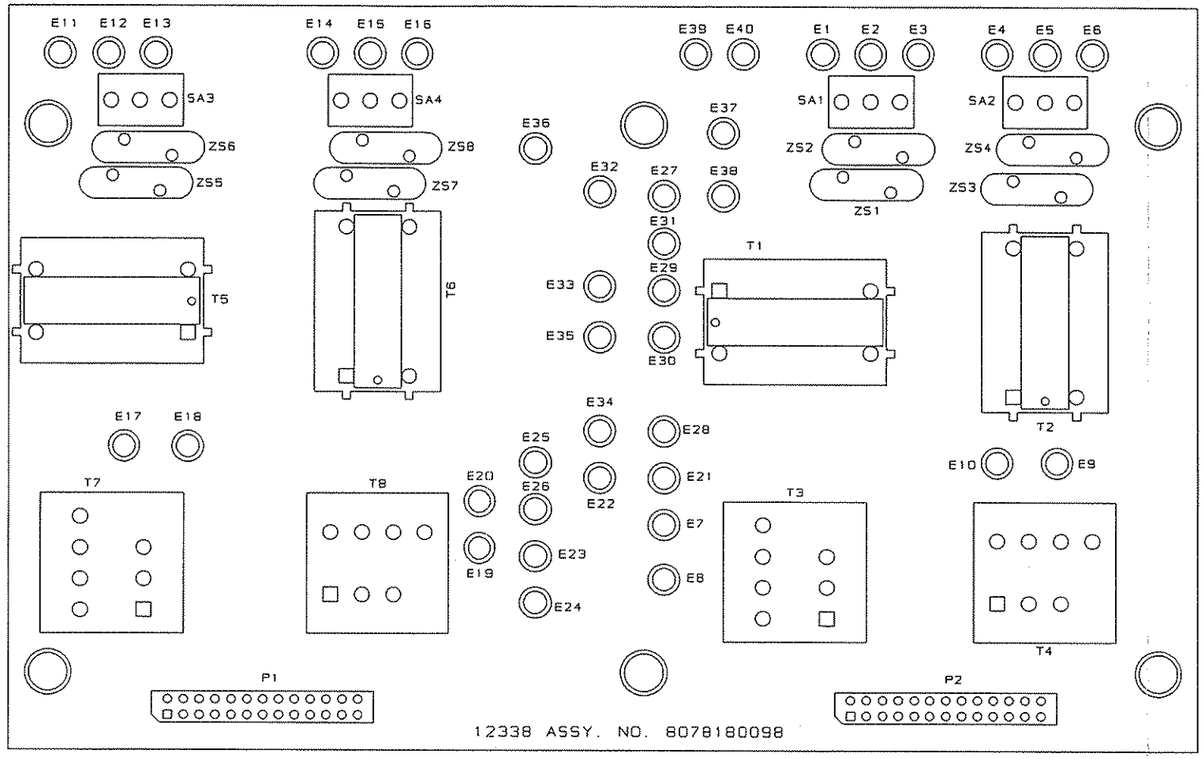

Figure 5.5.4 Rear Panel Assembly, page 1/3.

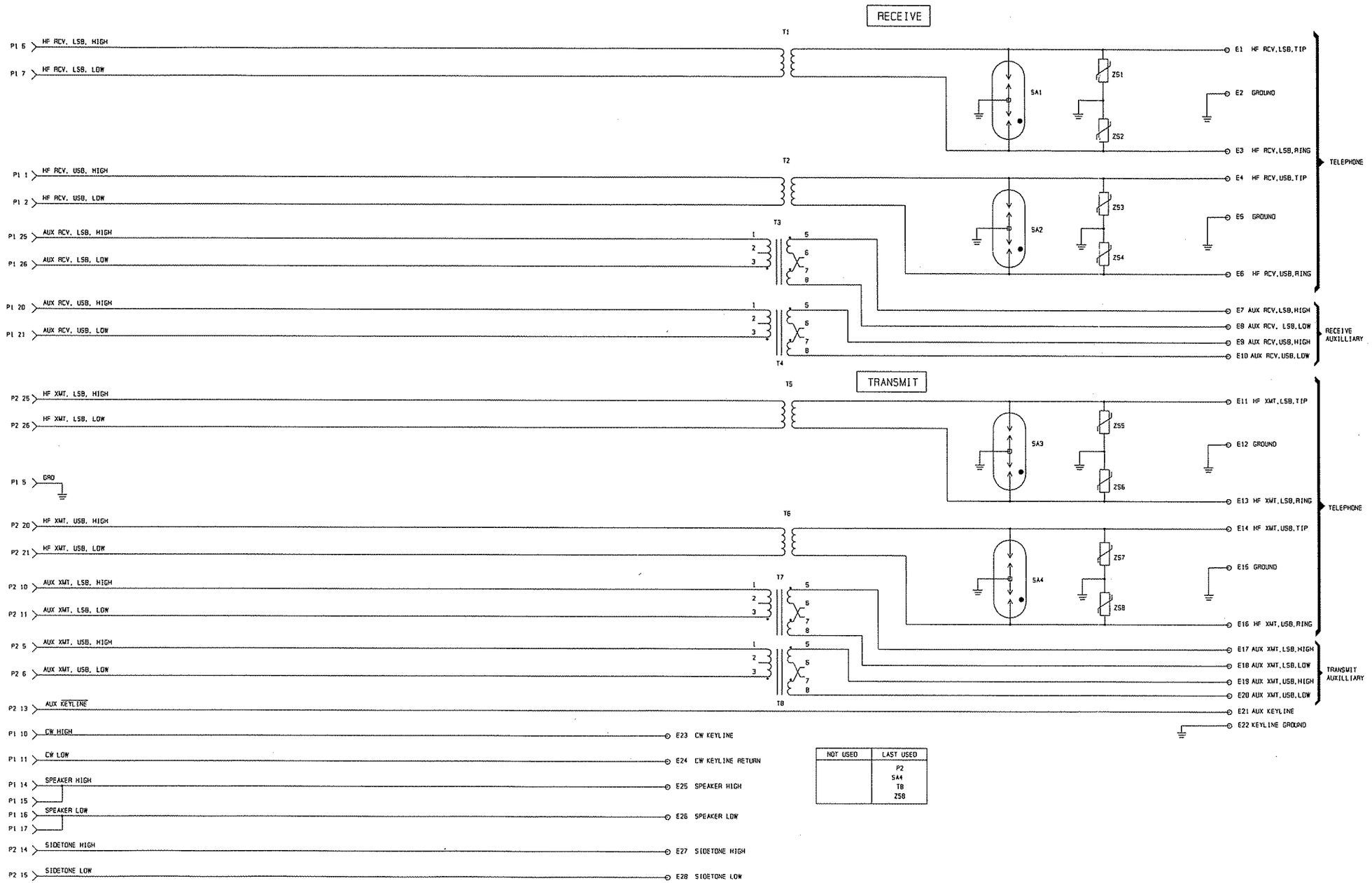

Figure 5.5.4 Rear Panel Assembly page 2/3.

821571

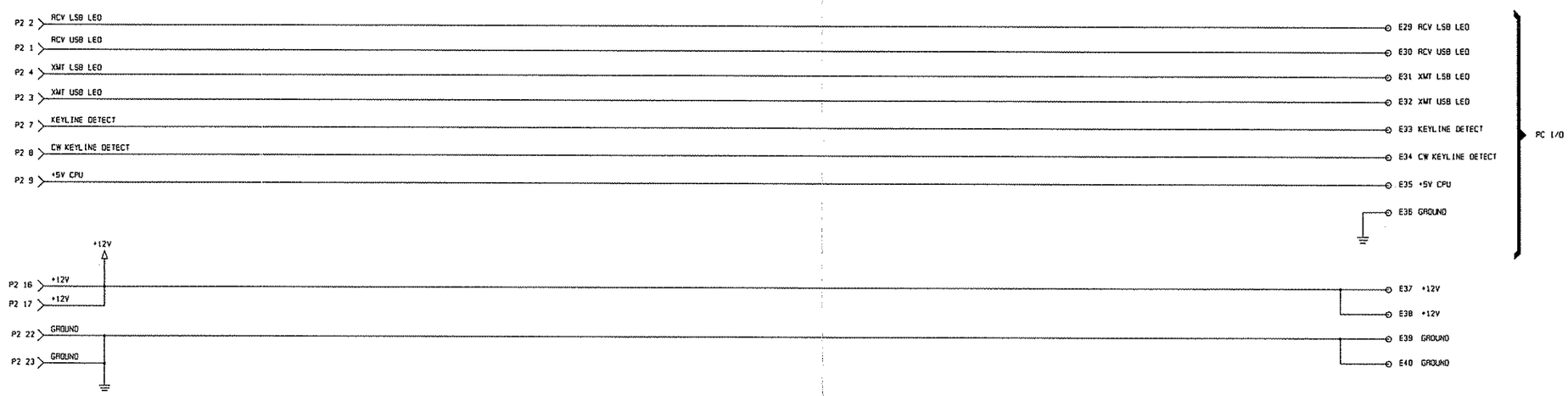

Figure 5.5.4 Rear Panel Assembly page 3/3

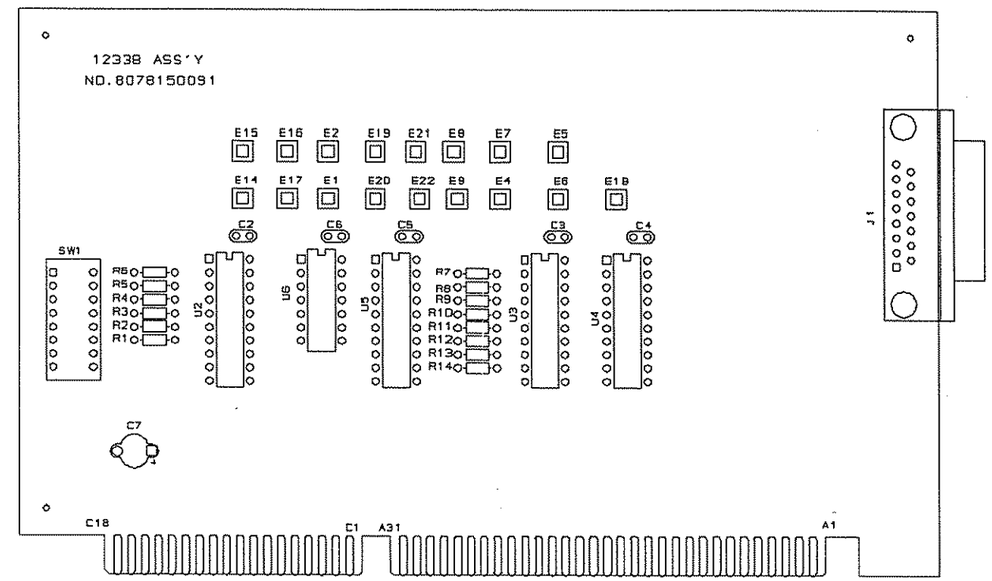

Figure 5.5.5 Digital Interface Assembly, page 1/2.

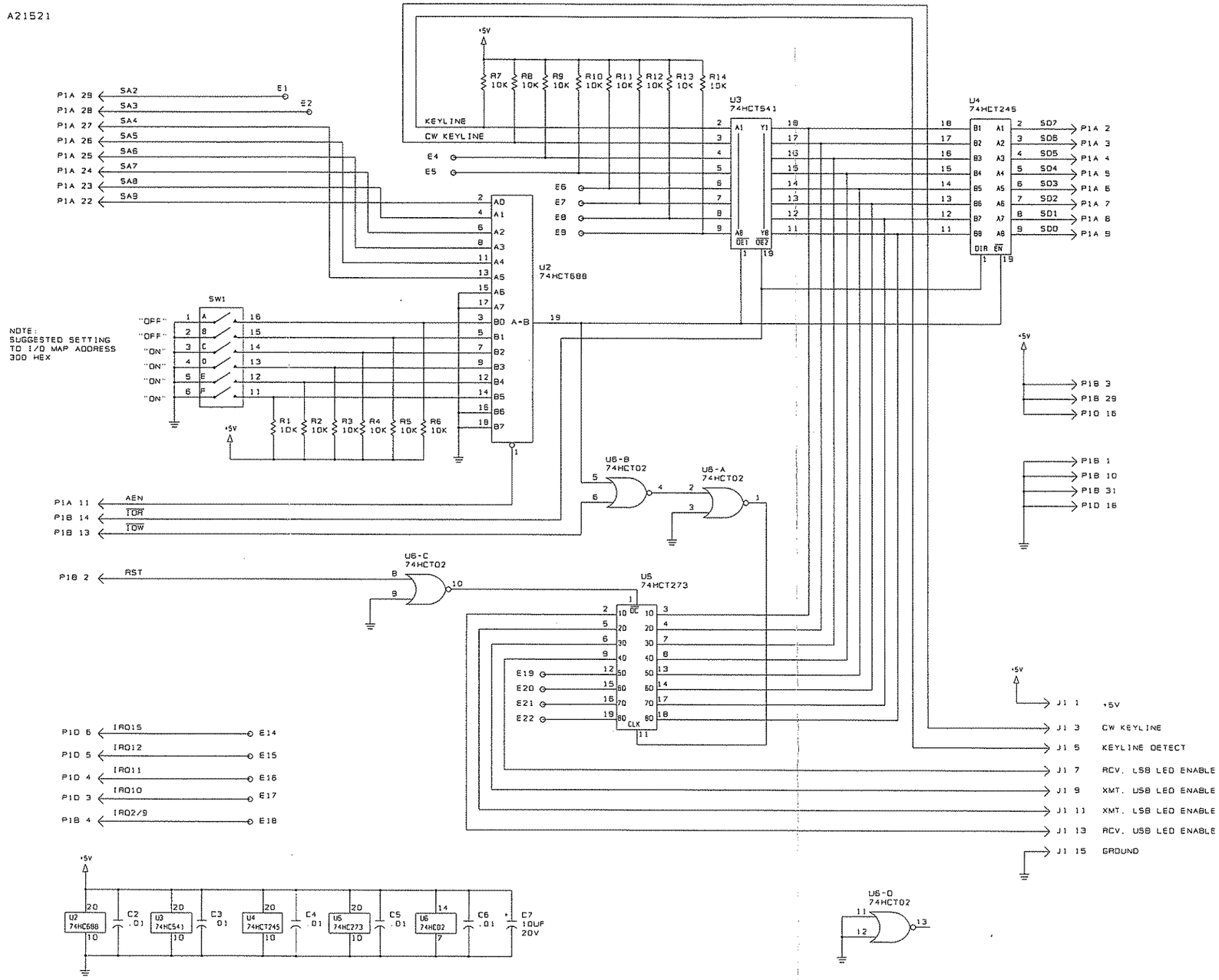

NOTE USED	LAST USED
C1	C7
U1	U6
	R14
	SW1

Figure 5.5.5 Digital Interface Assembly, page 2/2.