$125.00 list

sunair electronics, inc.
3101 S. W. 3rd Avenue, Ft. Lauderdale, Florida 33315 USA

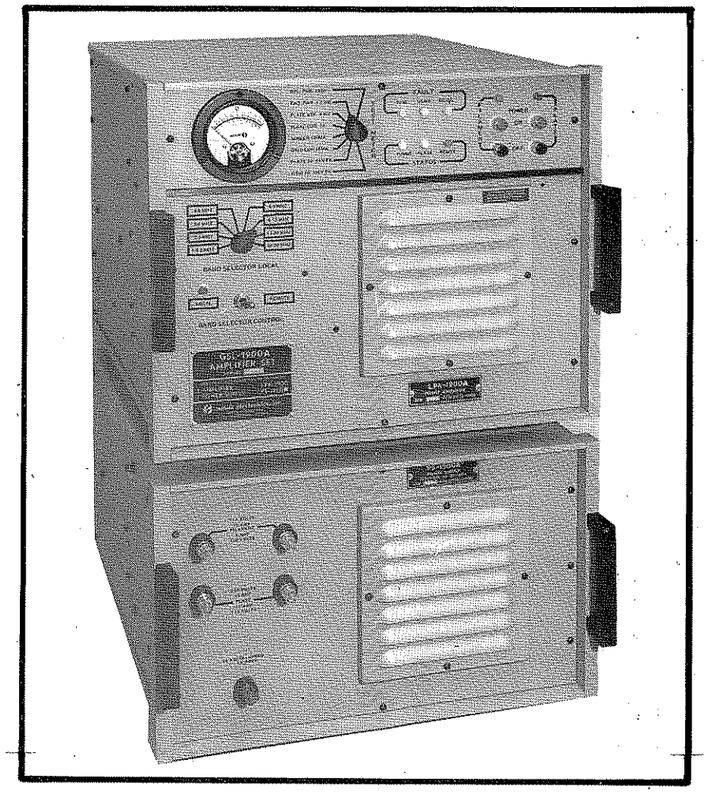

OPERATION AND MAINTENANCE MANUAL

GSL-1900A

KILOWATT LINEAR POWER AMPLIFIER

THIRD EDITION 1 OCTOBER 1984
MANUAL PART NUMBER 6032000605

TRAINING PROGRAMS

Sunair offers Training Programs of varying lengths to cover operation, service, and maintenance of all Sunair manufactured equipment. Up to eight technicians can be accomodated in these programs.

For more information, contact:

Product Services/Training Supervisor
Sunair Electronics, Inc.
3101 S.W. Third Avenue
Fort Lauderdale, Florida 33315-3389
U.S.A.

Telephone: (305) 525-1505
Telex: 51-4443
Cable: Sunair FTL

TABLE OF CONTENTS

SECTION		PAGE
I	**GENERAL INFORMATION**	
1.1	Purpose of Manual	1-1
1.2	General Description	1-1
1.3	Electrical Specifications	1-2
1.4	Equipment Supplied	1-4
1.5	Equipment Required, Not Supplied	1-5
1.6	Optional Equipment	1-5
1.7	Tube and Fuse Complement	1-6
II	**INSTALLATION**	
2.1	Unpacking and Inspection of Equipment	2-1
2.2	Return of Equipment to Factory	2-1
2.3	Installation Procedure	2-2
2.4	Configuration	2-2
2.5	Antennas and Ground Systems	2-2
2.6	External Connections	2-6
2.7	Preliminary Checks and Adjustments	2-14
2.8	Slide Mount Option	2-15
2.9	Shock Mounts and Stacking Options	2-15
III	**OPERATION**	
3.1	General	3-1
3.2	Function and Location of Controls and Indicators	3-1
3.3	Operating the GSL-1900A into a 50 Ohm Antenna	3-1
3.4	Operating the GSL-1900A with the GCU-1935 Antenna Coupler	3-5
3.5	Operation of the GSL-1900A with Exciters other than Sunair Models	3-5
IV	**THEORY OF OPERATION**	
4.1	Introduction	4-1
4.2	RF Power Amplifier Circuits	4-1
4.3	Automatic Tuning Circuits	4-6
4.4	RF Sensor Board (1A7)	4-12
4.5	ALR Board (1A13)	4-15
4.6	Regulator Board (1A5)	4-17
4.7	Tune Control Board (1A6)	4-19
4.8	Level Control Board (1A7)	4-21
4.9	Servo Control Amplifiers	4-24
4.10	Keyline Circuits	4-28
4.11	Metering Circuits	4-30
4.12	Power Control Circuits	4-32
4.13	Bandswitching Circuits	4-34
4.14	PS-1900A Power Supply	4-37
4.15	Typical Tuning Sequence	4-38
V	**MAINTENANCE AND REPAIR**	
5.1	Preventative Maintenance	5-1
5.2	Corrective Maintenance	5-3
5.3	Troubleshooting	5-13
5.4	Procedure for Replacing and Indexing GSL-1900A Tuning and Loading Vacuum Variable Capacitors C20 and C25	5-17
5.5	Replacement of Sheared Taper Pin in GSL-1900A Loading Inductor L8 Limit Stop End Cap	5-18
5.6	Installation of Air Vent	5-20
5.7	Power Amplifier Tube (V1)	5-20
5.8	Schematic Diagrams	5-46
VI	**ILLUSTRATED PARTS BREAKDOWN**	
6.1	General	6-1
6.2	List of Illustrations	6-1

LIST OF ILLUSTRATIONS

FIGURE		PAGE
1-1	GSL-1900A Linear Power Amplifier Set	1-3
2-1	GSL-1900A Outline Configuration	2-3
2-2	LPA-1900A/PS-1900A, GSL-1900A/ GCU-1935 Control Cables	2-4
2-3	Exciter/GSL-1900A Control Cable	2-5
2-4	Antenna Roof Top Installation	2-7
2-5	75 FT Longwire Antenna	2-8
2-6	GSL-1900A with Broadband Antenna	2-9
2-7	GSL-1900A with GCU-1935 with NON-Resonant Antenna	2-10
2-8	TR Auxiliary Relay Configuration	2-11
2-9	KW Longwire Antenna Kit (1003090010) Installation, Inverted L Configuration	2-13
2-10	Line Voltage Taps	2-15
2-11	GSL-1900A Primary Power Distribution	2-16
2-12	Shock Mount and Stacking Kit with Outline Dimensions and Details	2-17
2-13	Shock Mount Equipment Rack with Outline Dimensions and Details	2-19
2-14	Rack Mount Slide Details	2-21
3-1	Controls and Indicators GSL-1900A Front Panel	3-3
3-2	KW Control Unit, 1A2	3-5
4-1	Functional Block Diagram GSL-1900A	4-1
4-2	VSWR Nomograph	4-4
4-3	Theoretical Impedance Matching	4-5
4-4	Pre-Position Circuit, Simplified	4-8
4-5	Power Amplifier Plate Loading (Simplified)	4-11
4-6	Power Amplifier Plate Tuning GSL-1900A (Simplified)	4-13
4-7	Loading Lockout, Simplified GSL-1900A	4-23
4-8	ADL GSL-1900A Simplified	4-25
4-9	Closed Loop Servo Control Simplified	4-26
4-10	Keying Circuits GSL-1900A Simplified	4-29
4-11	Metering Circuits GSL-1900A Simplified	4-31
4-12	DC Overload Simplified	4-33
4-13	Power Control Circuits GSL-1900A Simplified	4-35
4-14	Band Switching Circuits GSL-1900A Simplified	4-36
4-15	Tune Cycle Timing GSL-1900A	4-39
4-16	Tune Cycle Flow Diagram GSL-1900A	4-40
4-17	Tuning and Ready Lamp Control	4-40
4-18	Servo Enable During Pre-Position	4-41
4-19	Servo Enable During Force	4-41
4-20	Servo Enable During Tuning	4-42
4-21	Fault Lamp Control	4-44
4-22	Servo Enable with GCU-1935 Home Position, PA Tune	4-46
4-23	GSL-1900A Tuning, GCU-1935 Disabled	4-47
4-24	GSL-1900A Tuned and Disabled, GCU-1935 Tuning	4-48
4-25	GCU-1935 Tuned and Disabled, GSL-1900A Final Tune	4-49
4-26	GCU-1935 Tune Cycle Schematic, Simplified	4-51
5-1	Grounding Stick	5-21
5-2	LPA-1900A Top View Major Assembly Locations	5-21
5-3	LPA-1900A Bottom View Major Assembly Locations	5-22
5-4	Vacuum Variable Capacitor Lubrication Points	5-23
5-5	System Test Block Diagram	5-24
5-6	VSWR Test Setup	5-25
5-7	Keyline/Audio Control Box	5-26
5-8	Zero Center Meter	5-27
5-9	GSL-1900A Rear View	5-28
5-10	RF Amplifier Component Locations, Top View	5-29
5-11	RF Amplifier Component Locations, Bottom View	5-30
5-12	Loading Inductor L8 (Pancake)	5-31
5-13	RF Compartment	5-32
5-14	PS-1900A Power Supply, Top View	5-33
5-15	PS-1900A Power Supply, Bottom View	5-34
5-16	RF Band Switch	5-35
5-17	Capacitor Setting vs Turns GSL-1900A	5-36
5-18	Load Limit Stop Assembly	5-37
5-19	Tune Drive Limit Stop Assembly	5-38
5-20	Wattmeter Component Locations	5-39
5-21	Pre-Position Pot Wiper Locations	5-40
5-22	GSL-1900A Main Schematic	5-48
5-23	DC Servo Amplifier (1A1, 1A8) Schematic	5-53
5-24	KW Remote Control (1A2) Schematic	5-55
5-25	Regulator (1A5) Schematic	5-57
5-26	Tune Control (1A6) Schematic	5-59
5-27	RF Sensor (1A7) Schematic	5-61
5-28	Level Control (1A9) Schematic	5-63
5-29	Pre-Position Control (1A11) Schematic	5-65

LIST OF ILLUSTRATIONS

FIGURE		PAGE
5-30	Keyline Sequencer (1A12) Schematic	5-67
5-31	ALR Board (1A13) Schematic	5-69
5-32	Power Supply PS-1900A	5-71
5-33	T/R Auxiliary Relay Schematic	5-73
6-1	GSL-1900A Power Amplifier	6-2
6-2	LPA-1900A Power Amplifier	6-6
6-3	Front Panel Assembly	6-10
6-4	Rear Panel Assembly	6-14
6-5	Right Panel Assembly	6-16
6-6	RF Chassis Assembly	6-18
6-7	Chassis Subassembly	6-38
6-8	Main Harness	6-46
6-9	Servo Amplifier Assembly	6-48
6-10	Plenum Assembly	6-50
6-11	RF Wattmeter Assembly	6-52
6-12	Tuning Capacitor Assembly	6-56
6-13	PS-1900A Power Supply	6-58
6-14	Power Supply Final Assembly	6-60
6-15	Power Supply Harness	6-66
6-16	Right Hand Panel Assembly	6-68
6-17	Power Supply Partition Assembly	6-72
6-18	KW Control Unit	6-74

LIST OF TABLES

TABLE		PAGE
3-1	Control and Indicator Functions, LPA-1900A	3-2
3-2	Typical Multimeter Indications	3-6
4-1	C25 and C20 Capacitance Ranges for Each Band	4-3
5-1	GSL-1900A Inspection Schedule	5-41
5-2	GSL-1900A Relay Complement	5-41
5-3	GSL-1900A Typical Test Meter Readings	5-42
5-4	Troubleshooting	5-42
5-5	Power vs Voltage	5-44
5-6	Table of Assemblies, LPA-1900A	5-45

SECTION I

GENERAL INFORMATION

1.1 PURPOSE OF MANUAL

This manual describes the GSL-1900A Linear Power Amplifier and includes installation details, operating instructions, and maintenance procedures. Information in this manual applies to all equipment configurations unless otherwise stated in the text or illustrations. The GSL-1900A Linear Power Amplifier is designed specifically for operation with Sunair 900 Series Transceivers and Exciters. The term "exciter" will be used to refer to all Sunair Transceivers and Exciters that can be used with the GSL-1900A.

1.1.1 PURPOSE OF EQUIPMENT

The purpose of the GSL-1900A Linear Power Amplifier is to amplify the low level RF output of a separate exciter to produce 1.0 KW peak envelope power (PEP) or average power with a nominal RF input signal level of 40 watts. The GSL-1900A is automatically tuned over the 1.6 to 30 MHz frequency range. It is intended for continuous duty, unattended operation in fixed station ground radio communications systems.

1.2 GENERAL DESCRIPTION

1.2.1 PHYSICAL DESCRIPTION

Outline and mounting dimensions for the GSL-1900A are given in Figure 2-1. Control, power, and RF connections to the equipment are made at the rear of the RF and Power Supply units. An RF amplifier control panel provides local control and monitoring functions for the GSL-1900A.

WARNING

OPERATING VOLTAGES AS HIGH AS 4000 VOLTS D.C. are present in the power supply and RF units. The interlock switch on the covers prevents application of voltage when the cover is open, unless it is "cheated". Short all high voltage components to ground with a grounding stick before attempting to work inside the power amplifier or power supply.

The RF amplifier unit, LPA-1900A is shown in Figure 1-1. The RF amplifier unit is a single chassis enclosure. Top and bottom covers provide complete access for servicing. An access door, located on the right side, is provided for ease in maintenance of the power amplifier tube chimney. A pressure blower is provided for cooling the power amplifier tube. Cooling air enters the unit through a filter in the front panel. A positive pressure is maintained in the grid circuit enclosure in order to force air through the power tube anode fins. Air exhaust is at the rear of the unit. Air flow is 100 CFM at 60 Hz primary line frequency.

The power supply unit, PS-1900A is also shown in Figure 1-1. This unit is similar to the RF unit, but is smaller in height. All of the heavy ironcore components are contained in this unit. A fan supplies flushing air. The KW control unit is designated, 1A2, and is designed to mount in the front panel cutout in the exciter. The control unit is complete with cable and connector.

1.2.2 ELECTRICAL DESCRIPTION

The GSL-1900A Linear Power Amplifier is an automatically tuned single stage power amplifier. A nominal 40 watts from an external exciter is required to drive the GSL-1900A to rated 1.0 kilowatt RF output power into a 50 ohm load. The RF amplifier grid circuit consists of a 50 ohm compensation network and the plate is tuned by a Pi-L output network. The RF output network is tuned to RF within the 1.6 to 30 MHz frequency range during an automatic tune cycle. The automatic tune cycle provides for band selection, prepositioning, and coarse and fine tuning of the RF elements. The gain of the power amplifier is controlled during the tune cycle by internal sensors which are connected to an external exciter gain control input. The GSL-1900A also develops automatic level control (ALC) voltage which is applied to the external exciter to control system gain.

All operating voltages are provided by the power supply unit and a power supply in the RF unit grid plenum. Primary power circuits are protected by indicating type fuses. The covers of both units have interlock switches for personnel protection.

The equipment can be locally controlled from its front control panel, in part, while complete control is provided at the exciter KW control panel.

1.3 ELECTRICAL SPECIFICATIONS

RF OUTPUT POWER: 1 KW PEP + 1.5db; -1.0db with two or more equal amplitude input tones. 1 KW average + 1.5db; -1.0db.

RF INPUT POWER: 40 watts nominal.

FREQUENCY RANGE: 1.6 to 30.0 MHz.

FREQUENCY SELECTION: Automatic.

TUNING TIME: 3 seconds nominal (without GCU-1935). (10 seconds with 1935)

TYPE OF EMISSION: AM, SSB, CW or any other type within the bandwidth and power capabilities of the amplifier.

INPUT IMPEDANCE: 50 ohms, unbalanced with 1.3:1 VSWR max.

OUTPUT IMPEDANCE: 50 ohms, unbalanced. VSWR to 2:1.

INTERMODULATION DISTORTION: Third and higher order distortion products are at least 30db below either tone of a two-tone signal producing rated output.

HARMONIC OUTPUT: 2nd harmonic at least 55 below PEP.

AC POWER INPUT: 115/230 volts, 50 to 60 Hz. ± 10% taps provided.

POWER CONSUMPTION: 2360 VA for 1 KW PEP 2-tone output, 3050 VA for 1 KW AVE output.

PHYSICAL SIZE & WEIGHT:

DIMENSIONS: PA Unit 14H x 18W x 23D (IN), 35.56H x 45.72W x 58.42D (CM).

DIMENSIONS: PS Unit 10½H x 18W x 23D (IN), 26.67H x 45.72W x 58.42D (CM).

WEIGHT: PA 60 LBS, PS 130 LBS.

ENVIRONMENTAL:

AMBIENT TEMPERATURE: -30°C to +50°C.

HUMIDITY: to 95% at +50°C.

ALTITUDE: to 5000 feet.

SHOCK: MIL-STD-810B, Method 516 PROC 1 (15G).

VIBRATION: MIL-STD-167 Type 1.

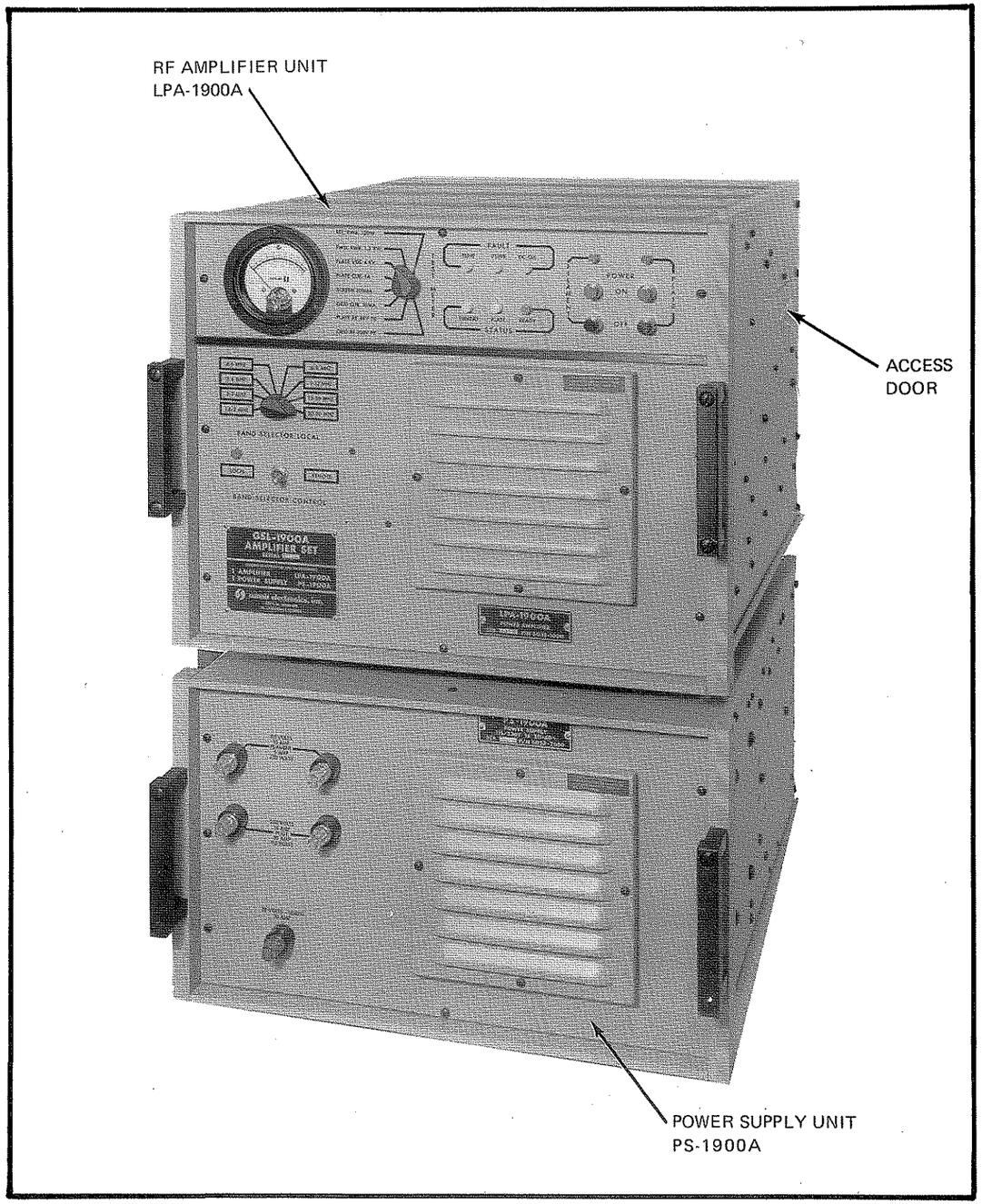

FIGURE 1-1 GSL-1900A LINEAR POWER AMPLIFIER SET

1.4 EQUIPMENT SUPPLIED

	SUNAIR PART NO.
GSL-1900A, Kilowatt Linear Power Amplifier Set.	6032001059 Gray 6032001091 Green
Consisting of:	
LPA-1900A, RF Amplifier Unit	6032002250 Gray 6032002292 Green
PS-1900A, Power Supply Unit	6032002454 Gray 6032002497 Green
Panel 1A2, KW Control Unit (complete with cable and connector to mount in exciter).	6032400051 Gray 6032400093 Green
Cable, Control (PA to PS) 6 FT cable with both connectors assembled.	6032650090
Cable, Control (Radio to PA) 7 Foot with both connectors	1002680026
Cable, Primary Power 10 FT cable, connector for PS-1900A only assembled.	6032660095
Lubricant, C5-A	0842210008
Operation and Maintenance Manual	6032000605
Connector Kit Consisting of:	6032600092
1 EA Connector, Coupler Control, Power 12 Pin Round	0754340007 (MALE)
2 EA Clamp, Cable, Connector	0754570002
2 EA Bushing, Telescoping, .75 ID	0700550071
2 EA Bushing, Telescoping, .62 ID	0700550062
2 EA Bushing, Telescoping, .56 ID	0700550054
1 EA Connector, (Exciter Control), Power 37 Pin Round	0754320006
2 EA Connector, UHF (PL-259), RF	0742190005
1 EA Adapter, (UG-175/U) for PL-259	0742070000
1 EA Jumper, RG-58 A/U Assembly, BNC/BNC 1 FT.	8043051291

1.5 EQUIPMENT REQUIRED, NOT SUPPLIED

1.	External AC Power Connector	User Supplied
2.	Transceiver or Exciter	Consult Sunair Sales
3.	Coaxial Cable, RG-8A/U	0588640000
4.	Antenna System, 50 Ohms Nominal	User Supplied
5.	Exciter GSL-1900A Control Cable	0579240002

1.6 OPTIONAL EQUIPMENT

1.	Operating Spares Kit	6032090493
2.	Running Spares	6032900193
3.	Depot Spares Kit	6032090591
4.	Field Module Kit, GSL-1900A	6032900096
5.	KW Antenna Coupler, GCU-1935	6029001051 Gray 6029001094 Green
6.	35 Foot Fiberglass Antenna 2 section up to 10 KW	0715850008 $1299.75
6A.	32 Foot Fiberglass Antenna 8	0712950007 Free Standing
7.	KW Longwire Antenna Kit	1003090010 Base 0715770004
8.	Feed-Thru, Antenna Mount, 1 KW	1004890001 0715780000
9.	Cable Assembly, Exciter to LPA Cable Assembly Exciter to LPA 17 Foot	6032000702 Base with 1002680026 Flange
10.	RG-58A/U Assembly UHF/UHF Length specified by customer.	8043051305
11.	RG-58A/U Assembly BNC/BNC Length specified by customer.	8043051399
12.	RG-58A/U Assembly UHF/Type N Length specified by customer.	8043051402
13.	Primary Power Cable w/o connectors Length specified by customer.	0841050007
14.	PA to PS Control Cable w/o connectors Length specified by customer.	6032071405
15.	Shock Mount Kit, GSL-1900A	6032009299

16.	Shock Mount Kit, Equipment Rack	6032090892
17.	Rack Mount Kit, 3 piece slides	6032090051 Gray 6032090094 Green
18.	Rack Mount Kit, 2 piece slides	6032090353 Gray 6032090396 Green
19.	LPA-1900A/PS-1900A Stacking Kit	6032090191
20.	Transceiver/Exciter Stack Mounting	6032090698
21.	Wired Rack	6032091058 Gray 6032091091 Green
22.	Wired Rack Assembly, GRC-970 System	8057510951 Gray 8057510994 Green
23.	Case, Transit System	1003210023
24.	Drawer, Transit System	1004440006
25.	Shroud Kit, GSL-1900A	1004240031 Gray 1004240023 Green
26.	Painted Parts Kit, GSL-1900A	6032000311 Gray 6032000303 Green
27.	T/R Auxiliary Relay Kit	8043050091

1.7 TUBE AND FUSE COMPLEMENT

V1, Power Amplifier Tube, Type 4CX1500B	6032071804
F1, Fuse, ½ Amp, Bandswitch Motor Type MDL-½	0841310009
2F1 & 2F2, Fuse 15 Amp, High Voltage Type MDA-15, 230 VAC	0841330000
2F1 & 2F2, Fuse 30 Amp, High Voltage Type MDA-30, 115 VAC	1002550025
2F3 & 2F4, Fuse 5 Amp, Filament & Control Type ABC-5 230 VAC	0841320004
2F3 & 2F4, Fuse 10 Amp, Filament & Control Type ABC-10 11~~4~~5 VAC	1002550017
2F5, Fuse 10 Amp, 28 VDC Unreg Type AGC-10	0848860004

CAUTION

TO INSURE THAT CABLE HAS NOT BEEN DAMAGED DURING SHIPMENT, ALL CABLE ASSEMBLIES MUST BE CHECKED FOR CONTINUITY OR SHORTS, FROM PIN TO PIN, BETWEEN CONNECTORS BEFORE INITIAL RADIO OR SYSTEM POWER UP.

WARNING

CONNECTORS INSTALLED BY THE CUSTOMER MUST BE WIRED IN ACCORDANCE WITH INSTALLATION INSTRUCTIONS PROVIDED IN THE OPERATION AND MAINTENANCE MANUAL. THE CABLE MUST BE CONTINUITY CHECKED AFTER INSTALLATION AND PRIOR TO RADIO OR SYSTEM POWER UP.

SECTION II

INSTALLATION

2.1 UNPACKING AND INSPECTION OF EQUIPMENT

The GSL-1900A Linear Power Amplifier is packed in two boxes using double wall construction. The cables are packed in the same container unless a rack mounted system has been supplied in which the cables are strapped inside the rack. The packing material should be removed carefully and the contents inspected for physical damage. Any claims for shipping damage should be filed promptly with the transportation company. If it is found necessary to file such a claim, retain all packing material.

Do not accept a shipment when there are visible signs of damage to the shipping container until a complete inspection is made. If there is a shortage of items or evidence of damage is noted, insist on a notation to that effect on the shipping papers before signing the receipt from the carrier. If concealed damage is discovered after the shipment has been accepted, notify the carrier immediately in writing and await his inspection before making any disposition of the shipment. A full report should also be forwarded to Sunair.

Include the following:

a) order number
b) model and serial number
c) name of transportation agency
d) applicable dates.

When this information is received by Sunair, arrangements will be made for repair or replacement.

2.2 RETURN OF EQUIPMENT TO FACTORY

The shipping container for the GSL-1900A has been carefully designed to protect the equipment during shipment. The container and its associated packing materials should be used to reship the unit. When necessary to return equipment to Sunair for warranty or non-warranty repair, an authorization number is required. This number can be obtained from our Product Services Department, TELEPHONE: 305-525-1505, TELEX: 51-4443, or CABLE: SUNAIR.

If the original shipping carton is not available, be sure to carefully pack each unit separately, using suitable cushioning material where necessary. Very special attention should be given to providing enough packing material around connectors and other protrusions. Rigid cardboard should be placed at the corners of the equipment to protect against denting. When returning subassemblies or components for repair or replacement, be sure to pack each unit separately, using suitable cushioning material where necessary.

Shipment should be AIR PARCEL POST consigned to:

SUNAIR ELECTRONICS, INC.
PRODUCT SERVICES DEPARTMENT
3101 SW 3rd Avenue
Fort Lauderdale, Florida
33315-3389 U.S.A.

Plainly mark with indelible ink all mailing documents as follows:

U.S. GOODS RETURNED FOR REPAIR
VALUE FOR CUSTOMS - $100.00

Mark all sides of the package:

FRAGILE - ELECTRONIC EQUIPMENT

NOTE

Before shipping, carefully inspect the package to be sure it is marked properly and is securely wrapped.

2.3 INSTALLATION PROCEDURE

2.3.1 STATION LAYOUT

The GSL-1900A must be installed in a structure which provides protection from the weather. Ambient temperature must be maintained between -30°C. (-22°F.) and 50°C. (122°F).

Reference to Figure 2-1 will provide the necessary outline dimensions required for installation, floor load is 190 pounds. Allow free circulation of air around the cabinet, and at least six inches air space between the back of the unit and a wall or partition. The companion exciter may be placed on top of the GSL-1900A for voice or CW modes of communications. For FSK or other modes requiring a full kilowatt of average power output, the exciter should be located on an adjacent table and have a blower kit. The exciter may also be rack mounted above the GSL-1900A if blowers are provided in the top of the rack.

2.4 CONFIGURATIONS

Figures 2-4 through 2-8 are illustrations of various GSL-1900A configurations.

2.4.1 TR Auxiliary Relay

The TR Auxiliary Relay Option is utilized for simplex or half-duplex operation using a GSR-920, GSE-924 and GSL-1900A. (Mounting holes for the TR Auxiliary Relay Box are provided on the rear panel of the LPA-1900A.) See Figure 2-8 for configuration details. Refer to Section V of the manual for the schematic of the relay box.

2.5 ANTENNAS AND GROUND SYSTEMS

The GSL-1900A is designed to work into two types of antennas:

a) Non Resonant antennas where a GCU-1935 Automatic Antenna Coupler is used and

b) Broadband antennas where the GSL-1900A is connected directly to the antenna.

Figures 2-4 through 2-7 illustrate configurations where each of these two types of antennas are used.

2.5.1 Random Length Non Resonant Antennas

The antenna impedance of non resonant antennas is dependent on the operating frequency. A GCU-1935 must be used to match the antenna to the GSL-1900A 1 KW Linear Power Amplifier. Thirty-five foot whip antennas offer a good compromise between practical height and good electrical performance at low operating frequencies. The performance of the 35 foot whip is greatly influenced by its ground system. For Base Station roof top installation refer to Figure 2-4 for grounding details.

Another non resonant antenna is the longwire. The two most popular length longwire antennas are 75 and 150 feet. Both of these antennas require the GCU-1935 Automatic Antenna Coupler to match the antenna to the GSL-1900A. Figure 2-5 is an illustration of a 75 FT longwire installation. Note that the feed line from the antenna to the coupler is part of the antenna's length.

2.5.2 Broadband 50 Ohm Antennas

These are generally complex, expensive antennas requiring a large area for installation. Their use is usually limited

ASY 11-20-98 31 in stock

7 Foot Cable P/N 1062680026

SUNAIR GSL-1900A

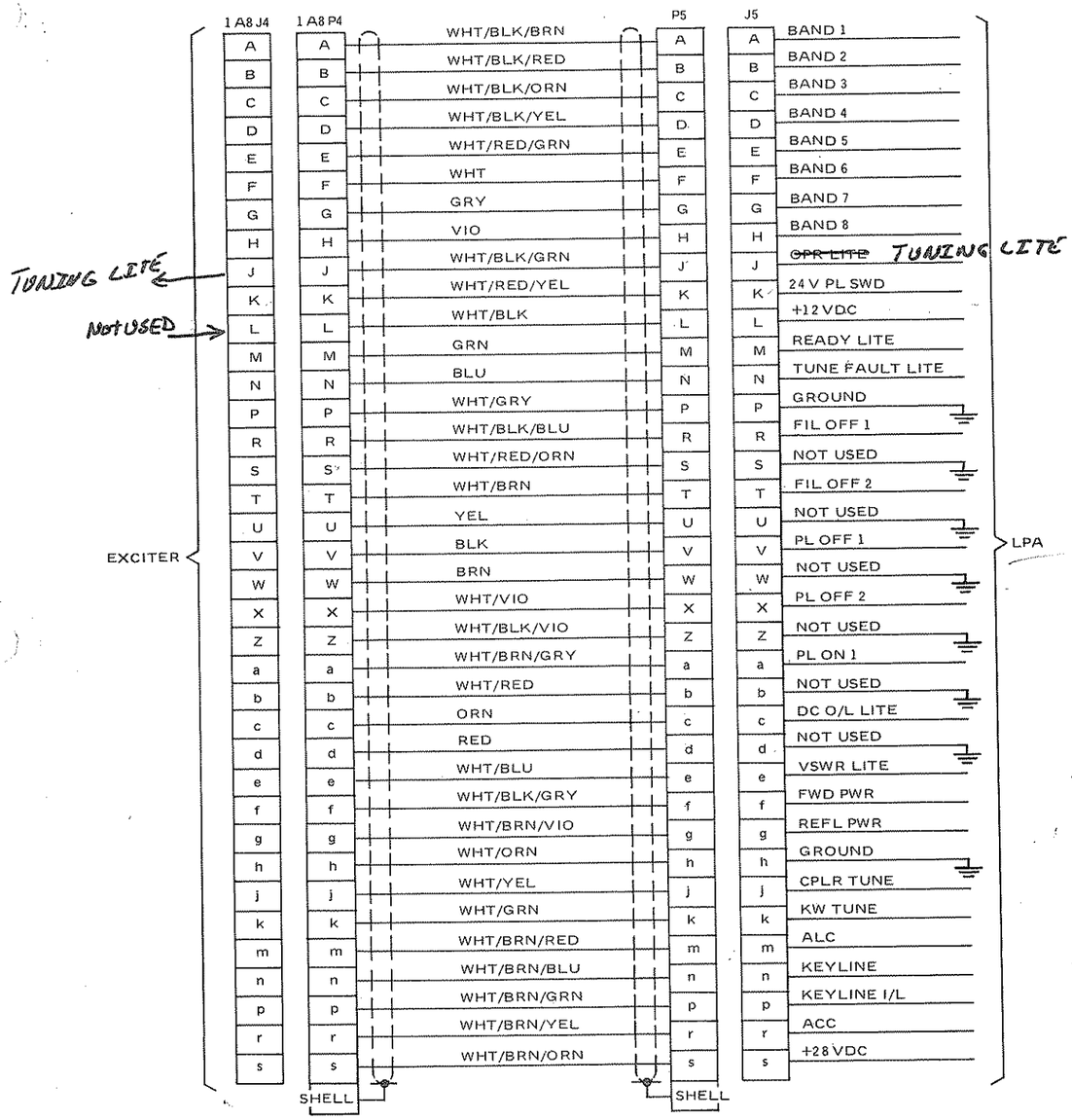

DESIGNATOR	CONNECTOR PART	SUNAIR PN	QTY
1 A8 P4	MS-3106 E-28-21P	0754690008	1
P5	MS-3106 A-28-21S	0754320006	1
XP5	MS-3057 A-16	0754570002	1
XP4, XP5	MS-3420-16	0700550071	2
XP4, XP5	MS-3420-12	0700550062	2
XP4, XP5	MS-3420-10	0700550054	2

1 A8 P4 COMPLETE: P/O EXCITER

P5 COMPLETE: P/O GSL 1900 A

— CABLE: SPECIAL ORDER P/N 0579240002

FIGURE 2-3 EXCITER/GSL-1900A CONTROL CABLE

to high performance base station installations which must operate at diverse frequencies. As this class of antenna has approximately 50 ohm output impedance over the rated band of frequencies, an antenna coupler is not required. Some common types of broadband antennas are the Discone and Log-Periodic. Figure 2-6 is an example of a system configuration utilizing a broadband antenna.

2.6 EXTERNAL CONNECTIONS

NOTE

If the T/R AUX Relay Kit 8043050091 has not been ordered, J6 and J7 have to be jumpered together, with jumper provided in connector kit p/n 6032600092, so the GSL-1900A can receive.

2.6.1 PRIMARY POWER CONNECTIONS

The GSL-1900A requires a primary power source that can provide up to 3.0 KVA.

Whenever possible, the primary power source should be connected to the amplifier through a double-pole, 30 ampere capacity, manual disconnect switch. An arrangement of this type will insure that all power has been removed from the unit prior to entrance for servicing. Refer to Figure 2-2 primary power interconnect diagram for the line voltage connection details. Cable W1, contains three each NO. 10 AWG conductors. The green wire connects to the station primary power ground system. The black and the white wires connect to the 115 or 230 volt power source at the disconnect switch previously described. The standard cable as furnished is 10 feet long.

2.6.2 EXCITER CONNECTIONS

Separation between exciter and PA may be up to 100 feet.

The control cable to the exciter is shown in Figure 2-3. The exciter accessory plug, 1A8P4, is furnished with the exciter. The plug P5, is furnished with the GSL-1900A. The control cable 0579240002 is 37 conductor, NO. 20 AWG wire, shielded and jacketed. This cable is available as an option in lengths specified by the customer. Fabricate the cable as shown on Figure 2-3.

A PL-259 UHF Connector, 0742190005, and adapter UG-175/U, 0742070000, are furnished with each of the exciter and power amplifier units. The RF coaxial cable is also available in optional lengths. Type RG-58A/U, Sunair 0588130001 coaxial cable is recommended for exciter to GSL-1900A spacings of less than 50 feet. For distances of 50 to 100 feet RG-8A/U, p/n 0588640000 should be used.

2.6.3 INTERUNIT CONNECTIONS

The cable from the PS-1900A power supply unit to the LPA-1900A power amplifier is shown in Figure 2-2. This cable is furnished completely assembled and tested in a standard 6 foot length.

2.6.4 RF OUTPUT CONNECTIONS

The power amplifier RF output connector is also furnished. RG-8A/U coaxial cable should be used, regardless of the distance to the antenna or antenna coupler.

2.6.5 ANTENNA COUPLER CONNECTIONS

If the GCU-1935 antenna coupler is part of the station system refer to manual 6029000501 for interconnection details.

If the GCU-1935 is not used, connect P4, (furnished with the GSL-1900A) as shown in Figure 2-2.

2.6.6 STATION RF GROUND SYSTEM CONNECTIONS

Grounding terminals are provided on the

6032001431A

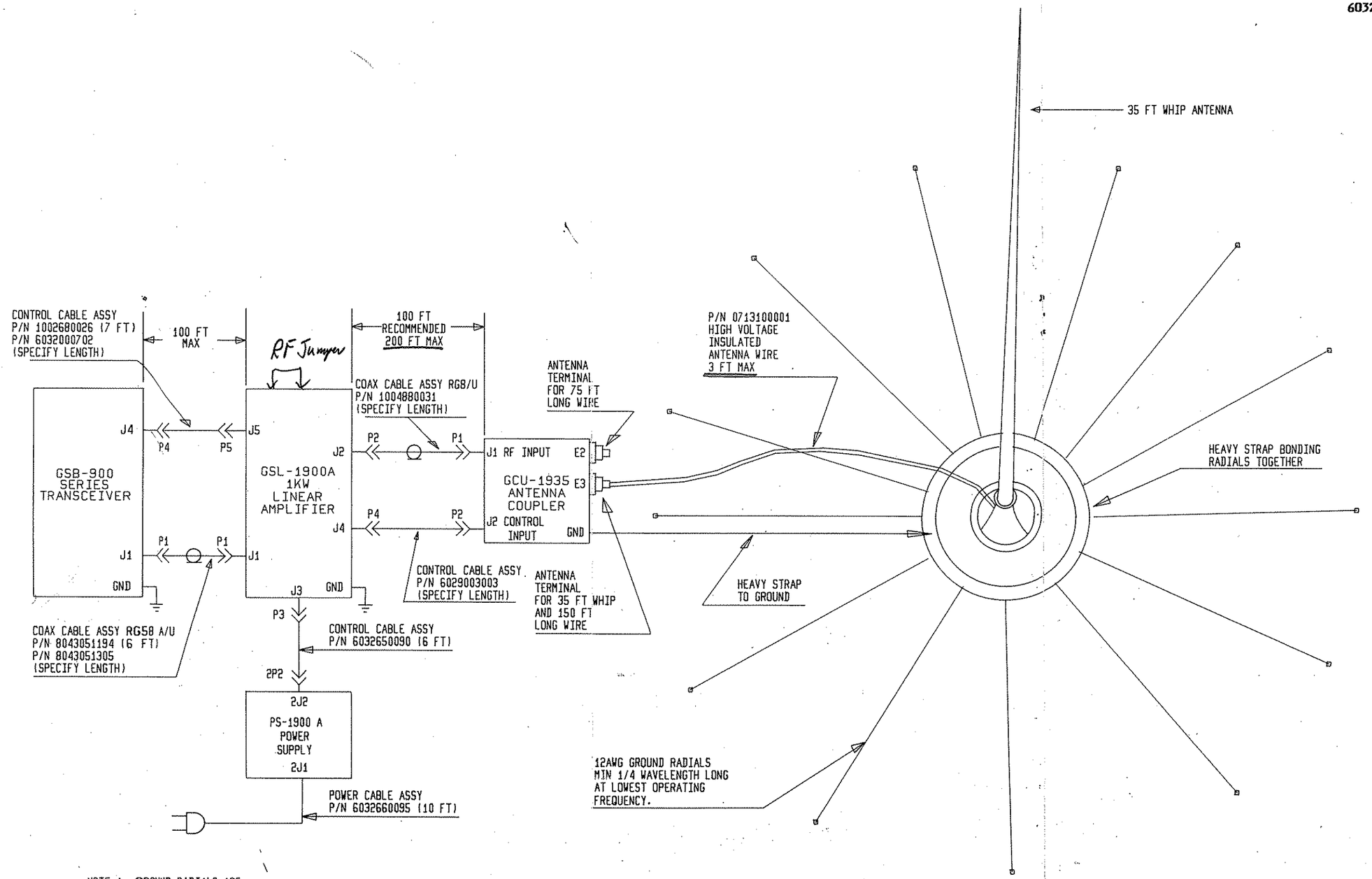

NOTE 1: GROUND RADIALS ARE PART OF THE ANTENNA. RECOMMEND MINIMUM OF 12 TO ENHANCE RADIATION PATTERN.

FIGURE 2-4 ANTENNA ROOF TOP INSTALLATION

6032001539A

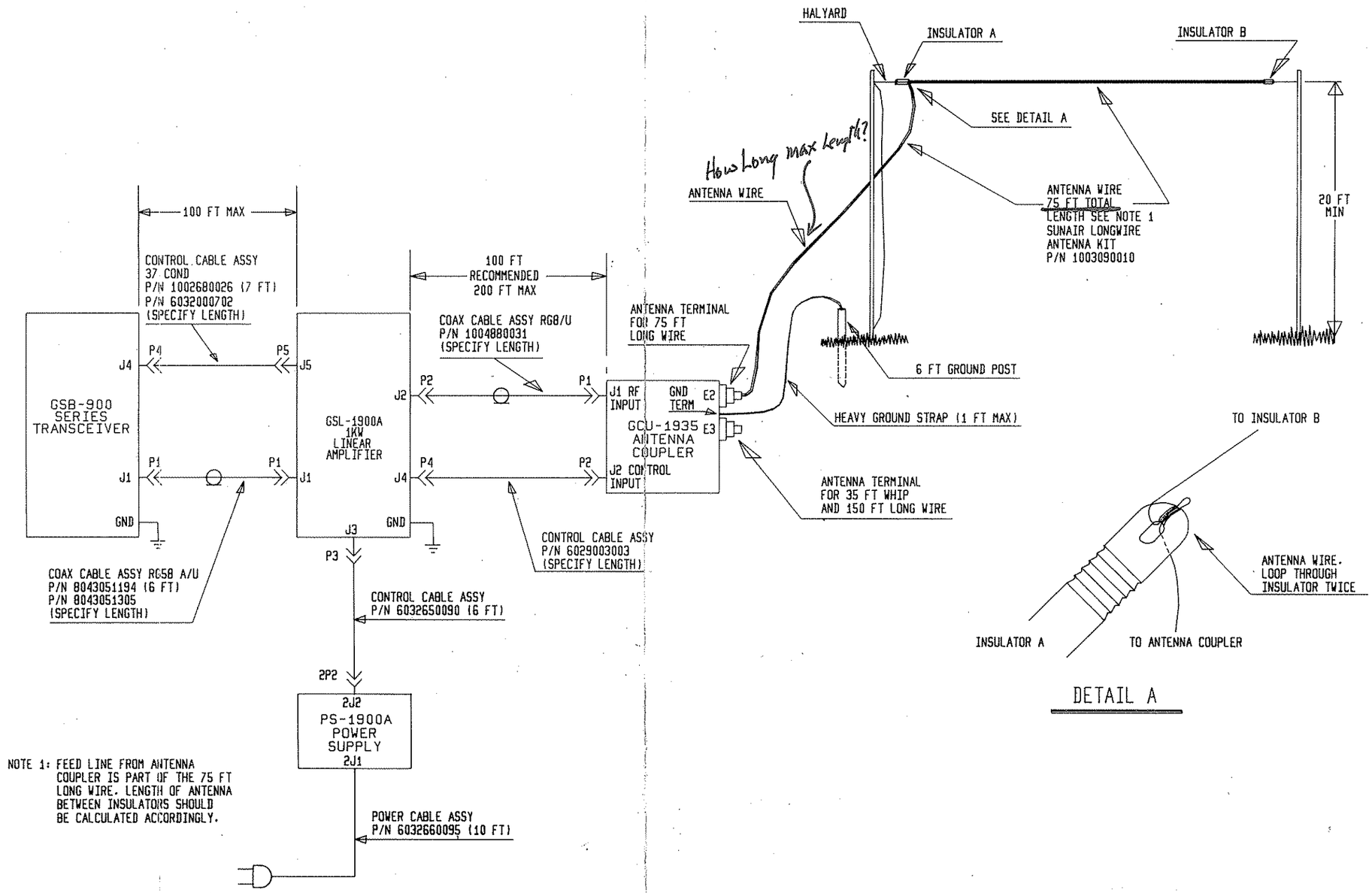

FIGURE 2-5 75 FT LONGWIRE ANTENNA

6032001237A

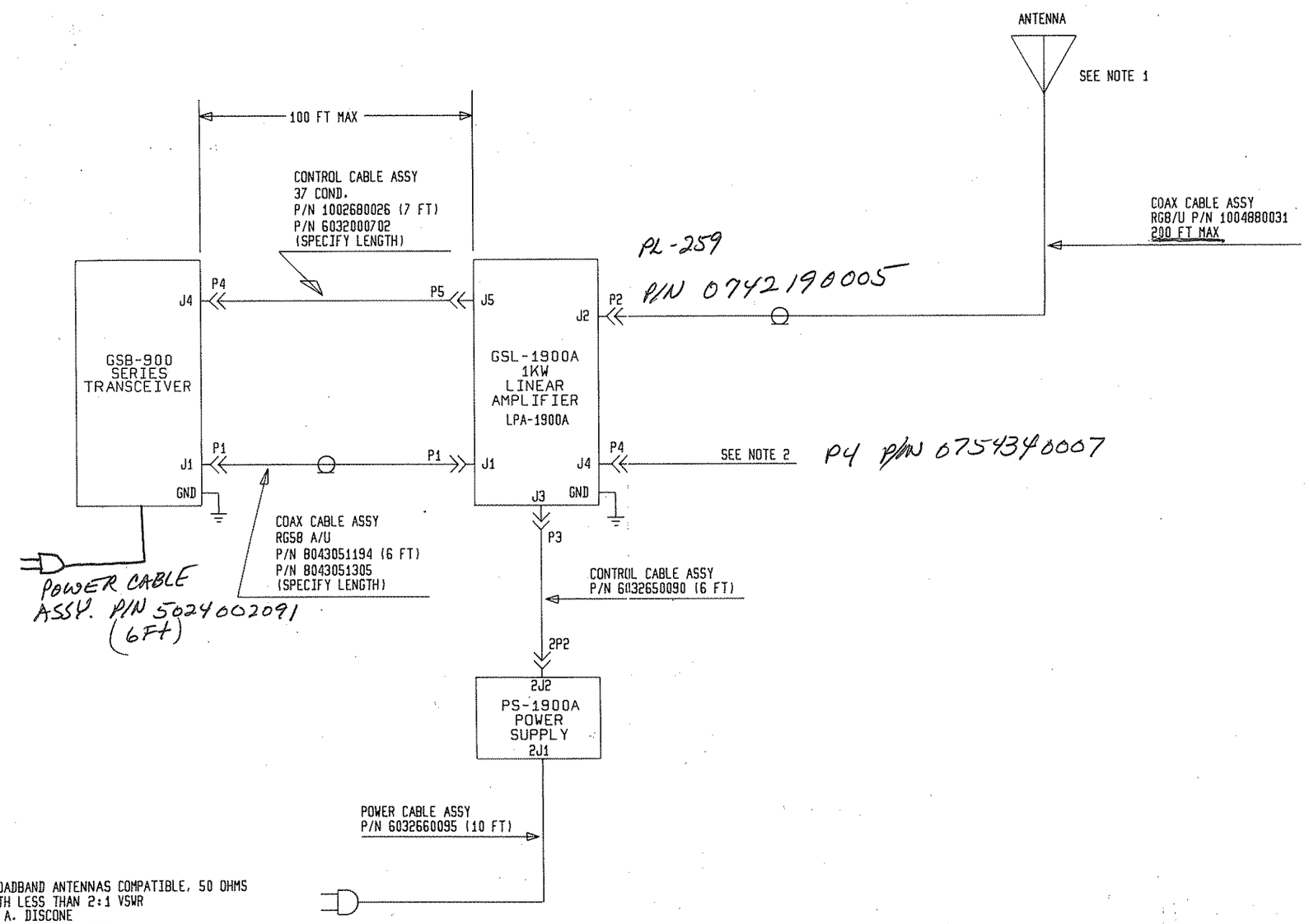

NOTES: 1. BROADBAND ANTENNAS COMPATIBLE, 50 OHMS
WITH LESS THAN 2:1 VSWR
A. DISCONE
B. LOG PERIODIC
2: IN THIS CONFIGURATION JUMPER
J4 PINS A TO K AND J TO L.

FIGURE 2-6 GSL-1900A WITH BROADBAND ANTENNA

6032001130A

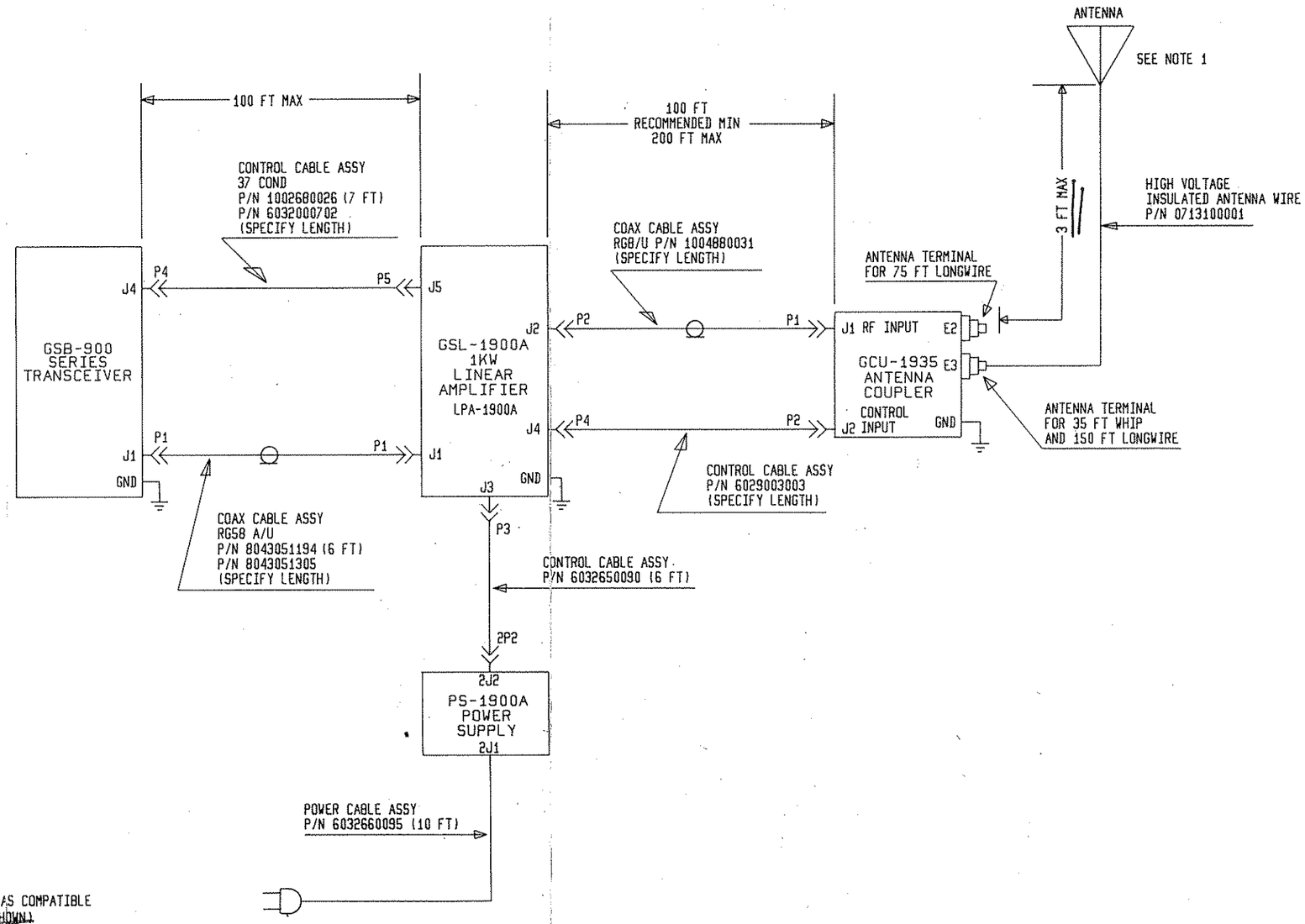

NOTE 1: NON-RESONANT ANTENNAS COMPATIBLE
A. 35 FT WHIP (SHOWN)
B. 75 FT LONGWIRE
C. 150 FT LONGWIRE

FIGURE 2-7 GSL-1900A WITH GCU-1935 WITH NON-RESONANT ANTENNA

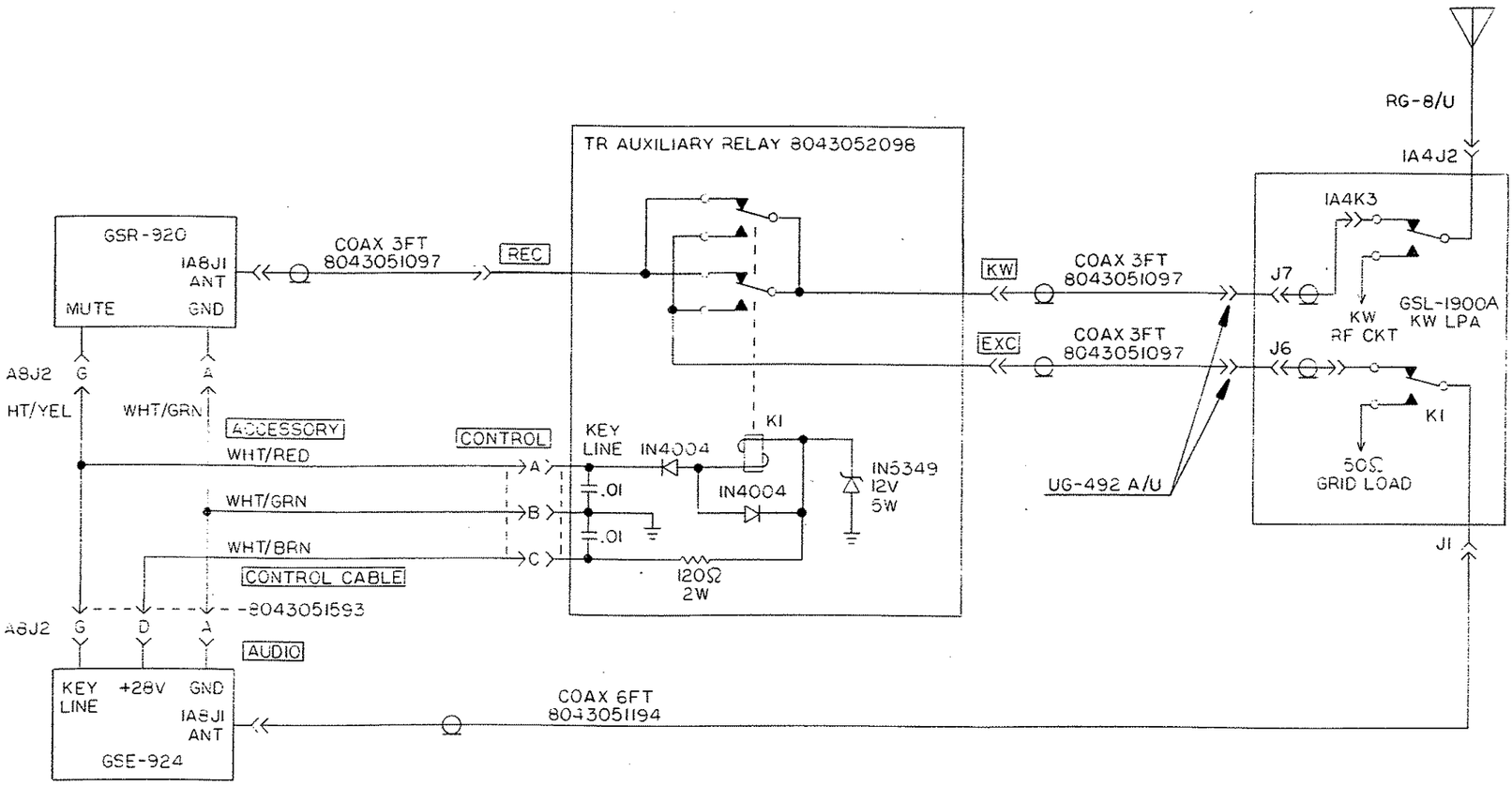

NOTES: 1. CABLE LENGTHS ARE FOR A STANDARD RACK OR STACK MOUNT INSTALLATION.

2. K1 in TR AUXILIARY RELAY is DPDT, 12V, Antenna SA P/N 0667310002

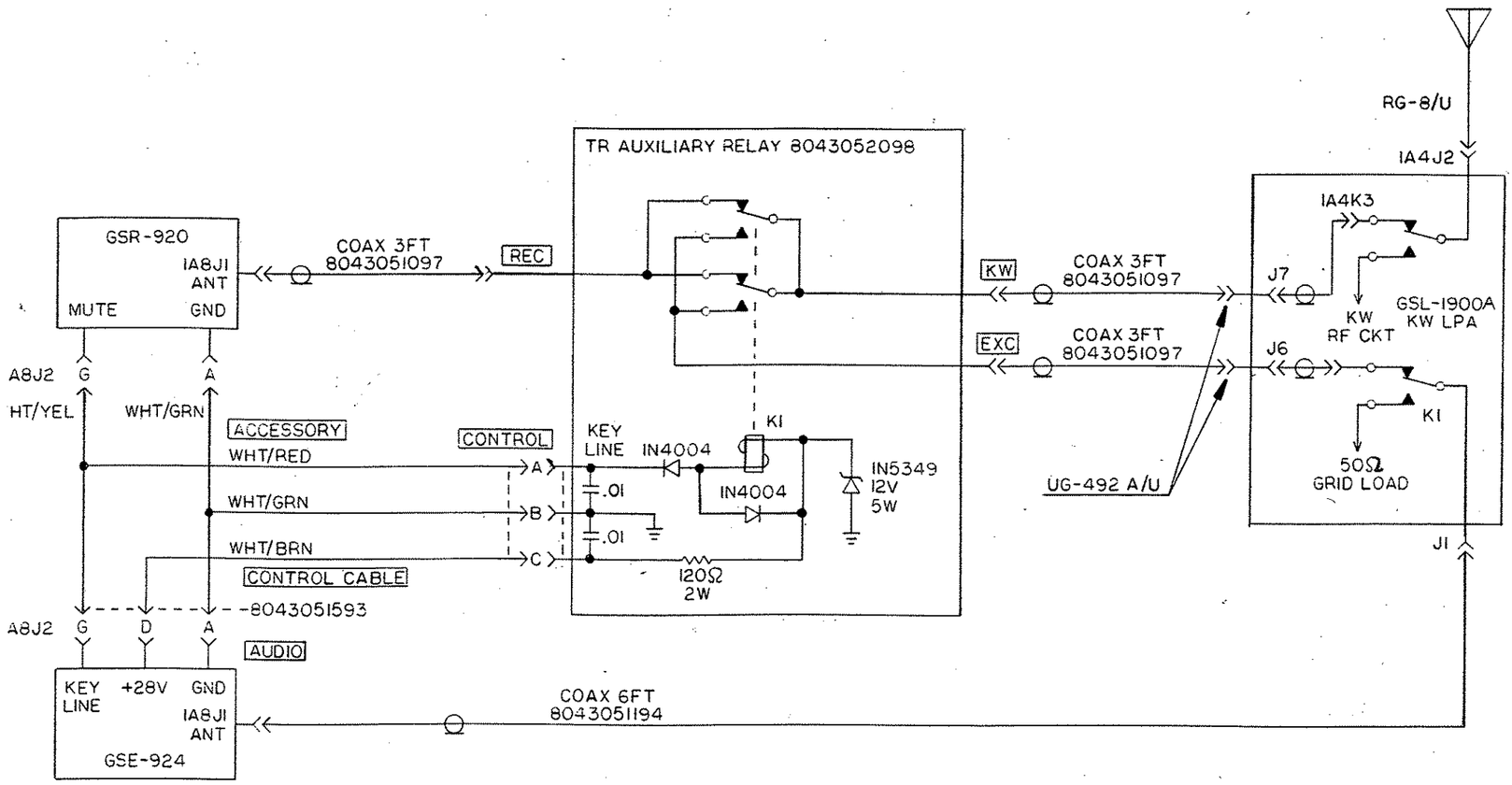

NOTES: 1. CABLE LENGTHS ARE FOR A STANDARD RACK OR STACK MOUNT INSTALLATION.

2. K1 in TR AUXILIARY RELAY is DPDT, 12V, Antenna 5A P/N 0667310002

6032001334A

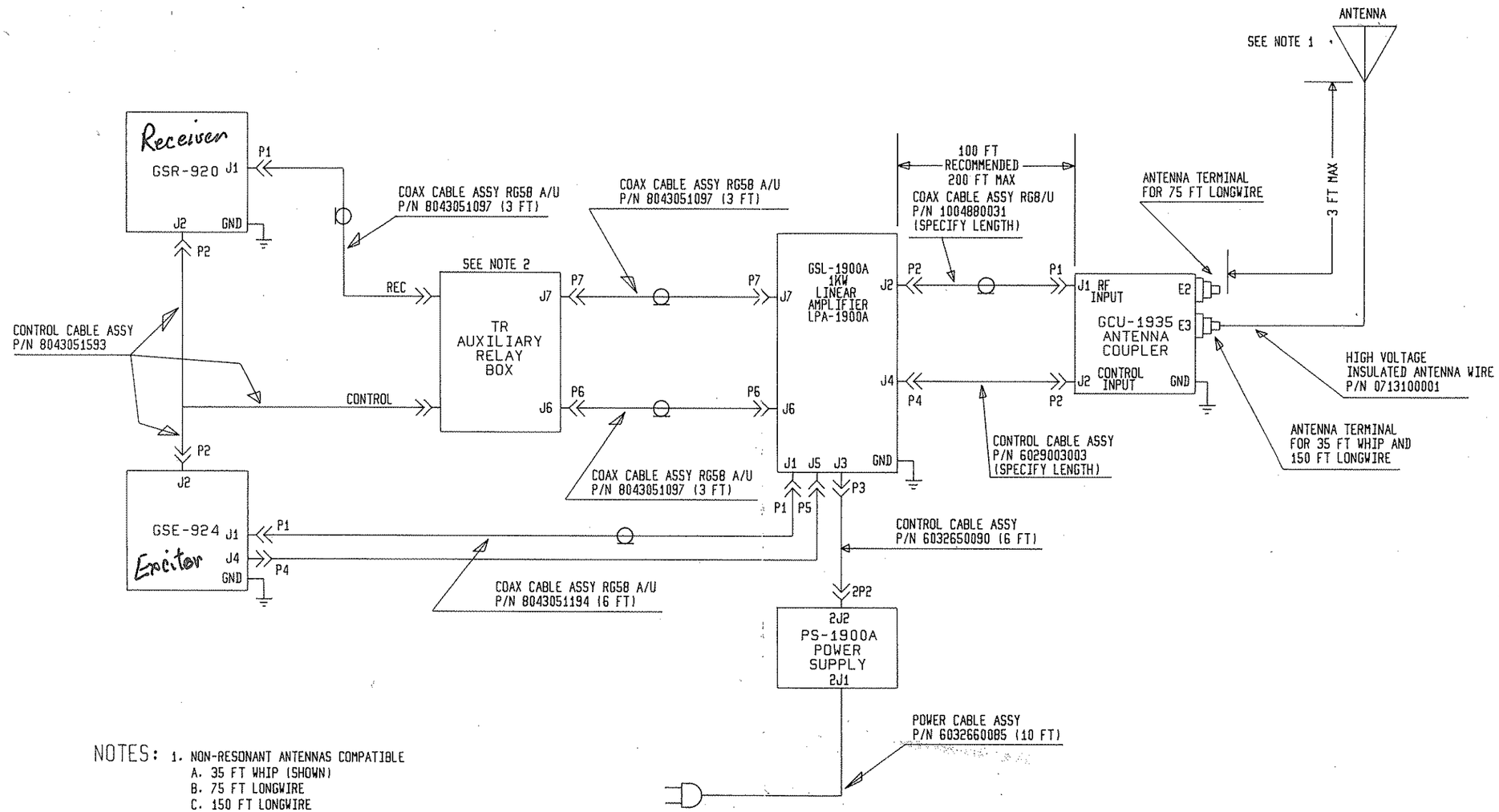

NOTES:
1. NON-RESONANT ANTENNAS COMPATIBLE
   A. 35 FT WHIP (SHOWN)
   B. 75 FT LONGWIRE
   C. 150 FT LONGWIRE
2. TRANSMIT/RECEIVE RELAY KIT P/N 8043050091

FIGURE 2-8 TR AUXILIARY RELAY CONFIGURATION

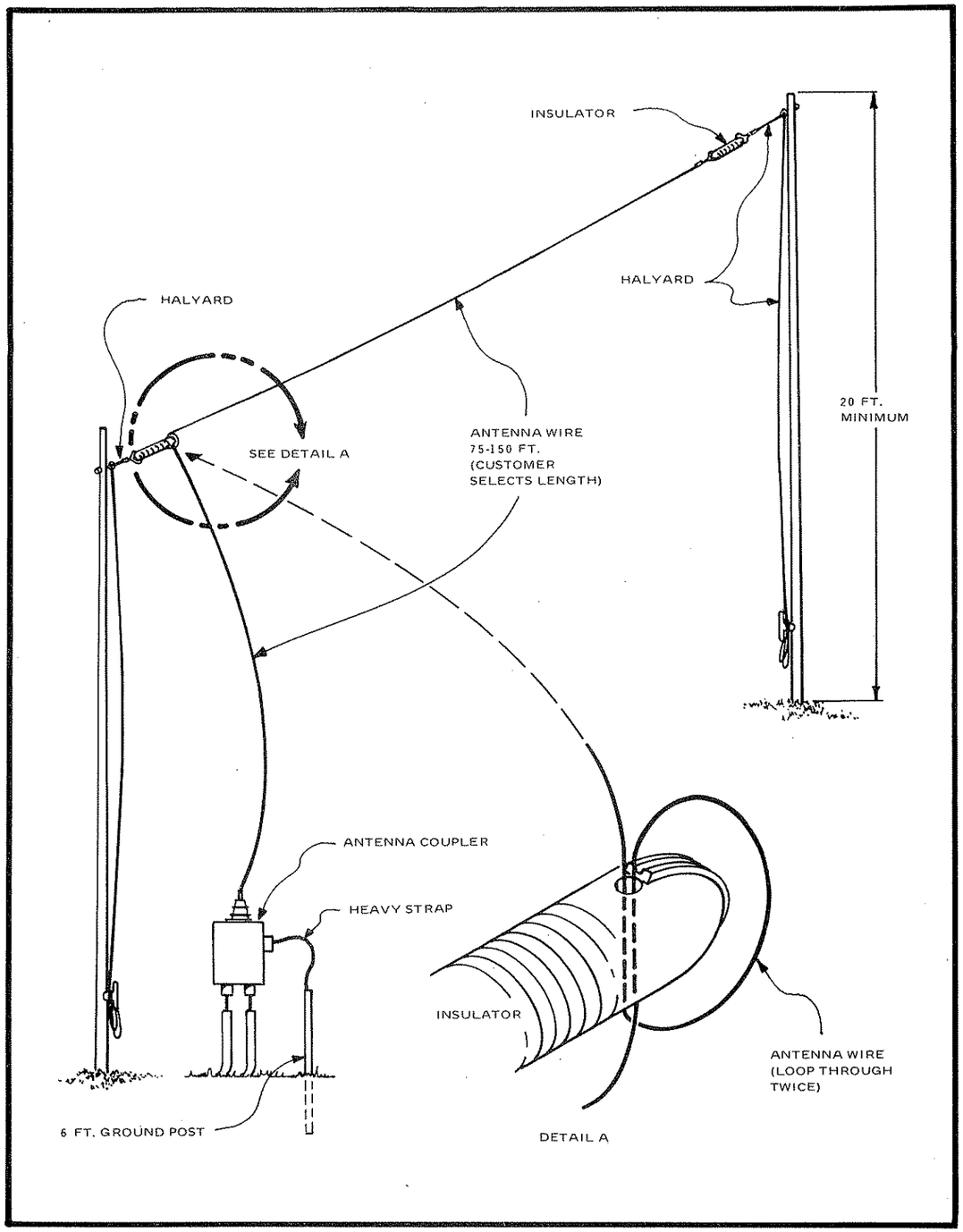

FIGURE 2-9 KW LONGWIRE ANTENNA KIT (1003090010) INSTALLATION, INVERTED L CONFIGURATION

exciter, GSL-1900A and GCU-1935 for connection to the station RF ground system. Use 1 or 2 inch wide copper strap or NO. 6 AWG wire or larger for this bonding. Keep lead lengths to a minimum.

2.7 PRELIMINARY CHECKS AND ADJUSTMENTS

2.7.1 MECHANICAL CHECKS

Visually inspect the linear amplifier for broken components. Remove all shipping tie-down and packing materials. Check the cover actuated high voltage interlock switches for proper action when the covers are in place. Loosen mounting screws and adjust, if necessary.

2.7.2 LINE VOLTAGE COMPENSATION

Primary line voltage taps are provided on the plate/screen power transformer, 2T1, and also on the unregulated 28 volt transformer, 2T2. These taps permit adjustment for 10% above and below the nominal line voltages of 115 and 230 VAC. Jumpers are provided on the power input terminal board 2TB1 and on transformers 2T1 and 2T2 for changing from operation at 230 VAC or 115 VAC. Fuses 2F1, 2F2, 2F3, and 2F4 must be changed as indicated in Figure 2-11.

2.7.3 FILAMENT VOLTAGE ADJUSTMENT

The filament voltage has been adjusted at the factory for the nominal primary voltage specified by the customer. Check the filament voltage as follows.

CAUTION

Insure the Plenum Cover is replaced after completing this adjustment.

Remove the grid plenum cover. Connect an AC voltmeter with a 1 to 10 volt scale and 1% accuracy directly to the tube socket filament terminals. Route the leads near a plenum corner and replace the cover. Press the "Filament On" switch and check the voltage. Adjust the sliders on R10 and R11 in equal increments until the filament voltage is 6.0 volts ±5%. DO NOT attempt to make this adjustment with the filaments energized.

2.7.4 LPA STATIC PLATE CURRENT ADJUSTMENT

The power amplifier plate current must be adjusted to 300 milliamps DC with no RF input signal applied.

Adjustment procedure:

1. Switch the exciter to the USB or LSB mode.
2. Apply DC plate voltage to the power amplifier.
3. Close the keyline. If a microphone is used, be sure no audio is applied. Turn MIC GAIN to zero.
4. Place the test meter selector switch in the DC plate current position.
5. Adjust the DC bias potentiometer, R8 located on the rear apron of the LPA unit, for a plate current meter indication of exactly 300 milliamperes. Lock the potentiometer shaft to this setting.

2.7.5 KEYLINE INTERLOCK

Be sure that the internal jumper between 1A8J4-n and p on the exciter has been removed. Disconnect 1A8P4 and attempt to key the exciter. If the jumper is not present, the unit will not key.

NOTE

GSB-900 FIELD MODIFICATIONS

If it is intended to use a GSB-900 with a serial number prior to 1191, a field modification kit 5024015096 is required to permit external connections to the exciter ACC

and ALC circuits. Complete installation instructions are provided with the kit.

2.8 SLIDE MOUNT OPTION

An optional slide mounting kit is available to facilitate installation of the GSL-1900A power amplifier and power supply units in standard E.I.A. equipment racks. See Figure 2-14.

2.9 SHOCK MOUNTS AND STACKING OPTIONS

The GSL-1900A power amplifier may be shock mounted for transportable applications when the stacking option is used. Figure 2-12 illustrates the options. If the exciter is not used in the stack, the snubbers may not be required if wall clearance is at least 12 inches.

Figure 2-13 provides information for shockmounting the equipment racks.

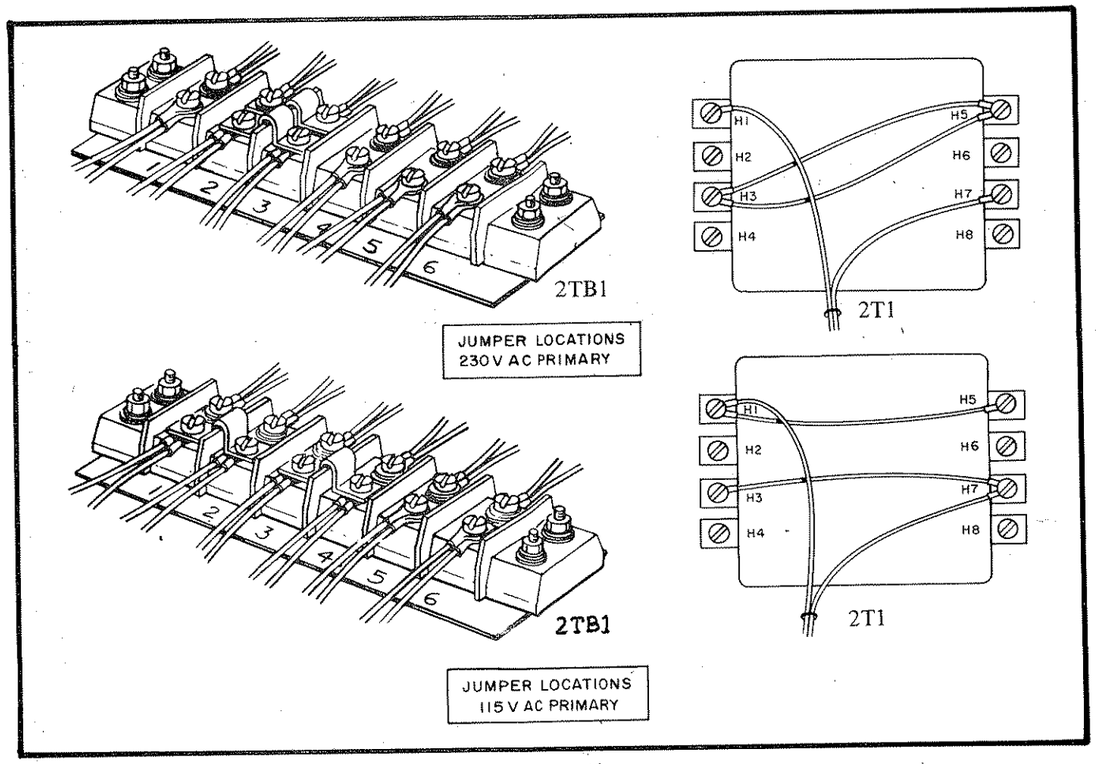

FIGURE 2-10 LINE VOLTAGE TAPS TP 2-10

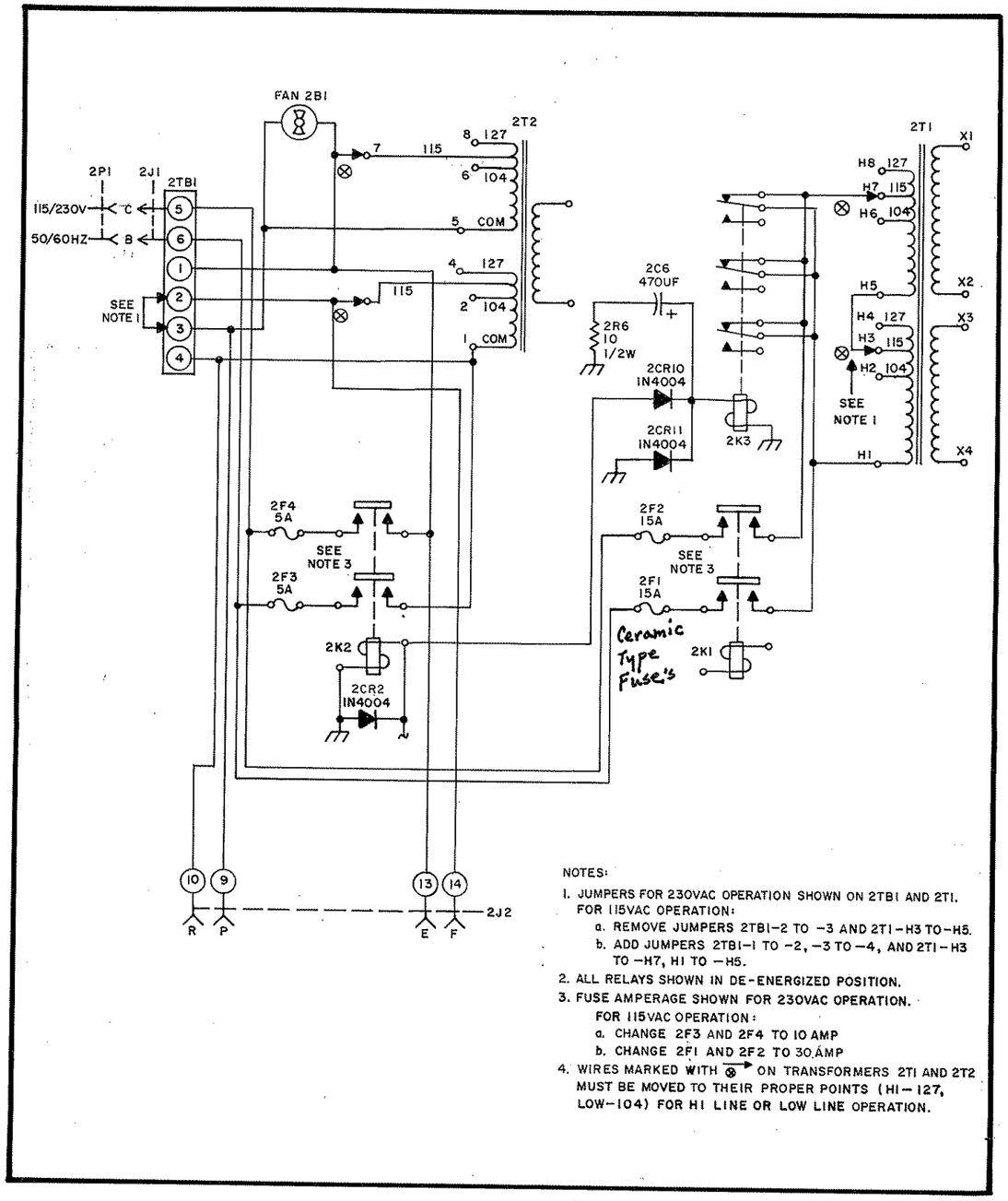

FIGURE 2-11 GSL-1900A PRIMARY POWER DISTRIBUTION TP Q-11

6032002501A

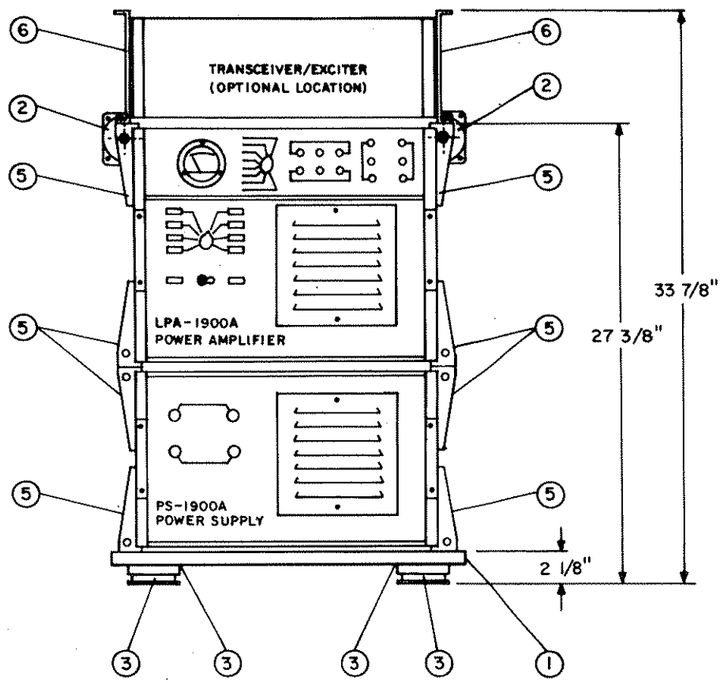

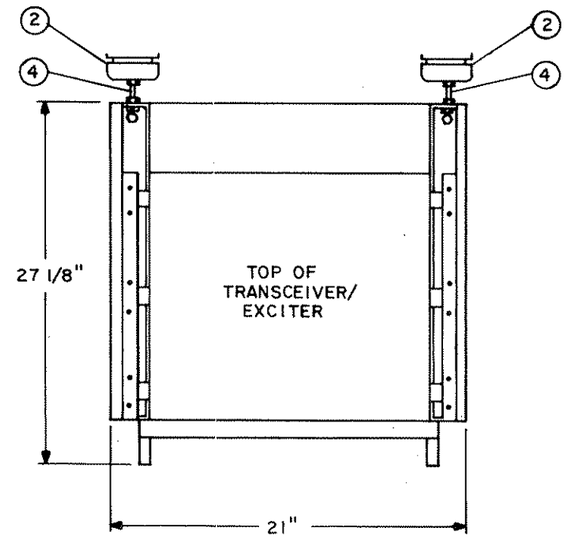

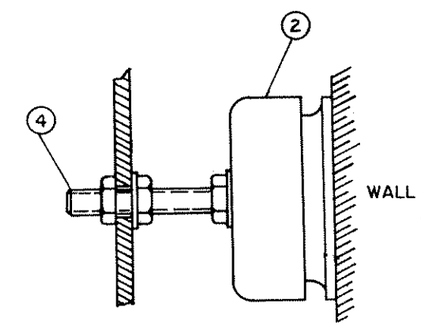

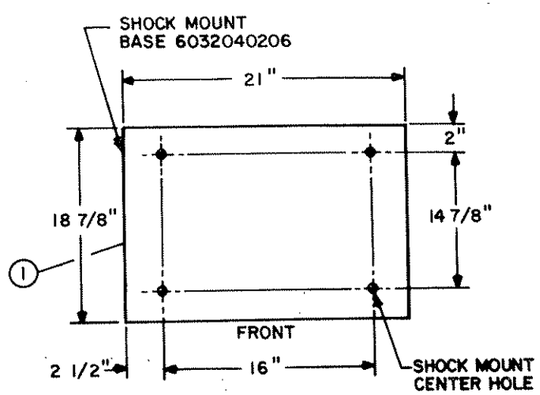

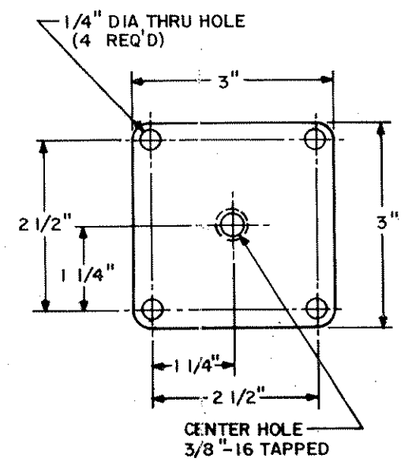

CONTENTS OF SHOCKMOUNT ASSEMBLY KIT P/N 6032090299

ITEM	DESCRIPTION	P/N	QTY
1	Shockmount Base	6032040208	1
2	Isolator, Shock/V1B, 30-50 Lbs.	0841820007	2
3	Isolator, Shock/V1B, 50-80 Lbs.	0841810001	4
4	Rod, JHD 3/8-16 x 4 Lg.	0542880644	2
	Washer, Split 3/8	0501650008	8
	Washer, Flat, 406 ID .8120 D	0501780009	6
	Screw, Hex Hd 3/8-16 x 3/4 Lg.	0501690006	4
	Nut, Hex 3/8-16 x 9-16 AF	0501700005	10
CONTENTS OF: STACK MOUNTING KIT, PA/PS P/N 6032090191			
5	Bracket, Stack Mounting	6032040101	6
	Washer, Split 1/4 Blk	0538370025	16
	Screw, PH 1/4-20 x 5/8 Lg Blk	0525911022	16
	Nut, Hex 1/4-20 x 7/16 AF Blk	0501950028	16
CONTENTS OF: STACK MOUNTING KIT, EXCITER P/N 6032090698			
5	Bracket, Stack Mounting	6032040101	2
6	Support, Stack Mounting	6032040607	2
	Washer, Split No. 10 Blk	0500070024	6
	Washer, Split 1/4 Blk	0538370025	8
	Screw, FILH 10-32 x 3/4 Lg. Blk	0501631224	6
	Screw, PH 1/4-20 x 5/8 Lg Blk	0525911022	8
	Nut, Hex 1/4-20 x 7/16 AF Blk	0501950028	8

FIGURE 2-12 SHOCK MOUNT AND STACKING KIT WITH OUTLINE DIMENSIONS AND DETAILS

306- 931-7154
Bill

6032001806A

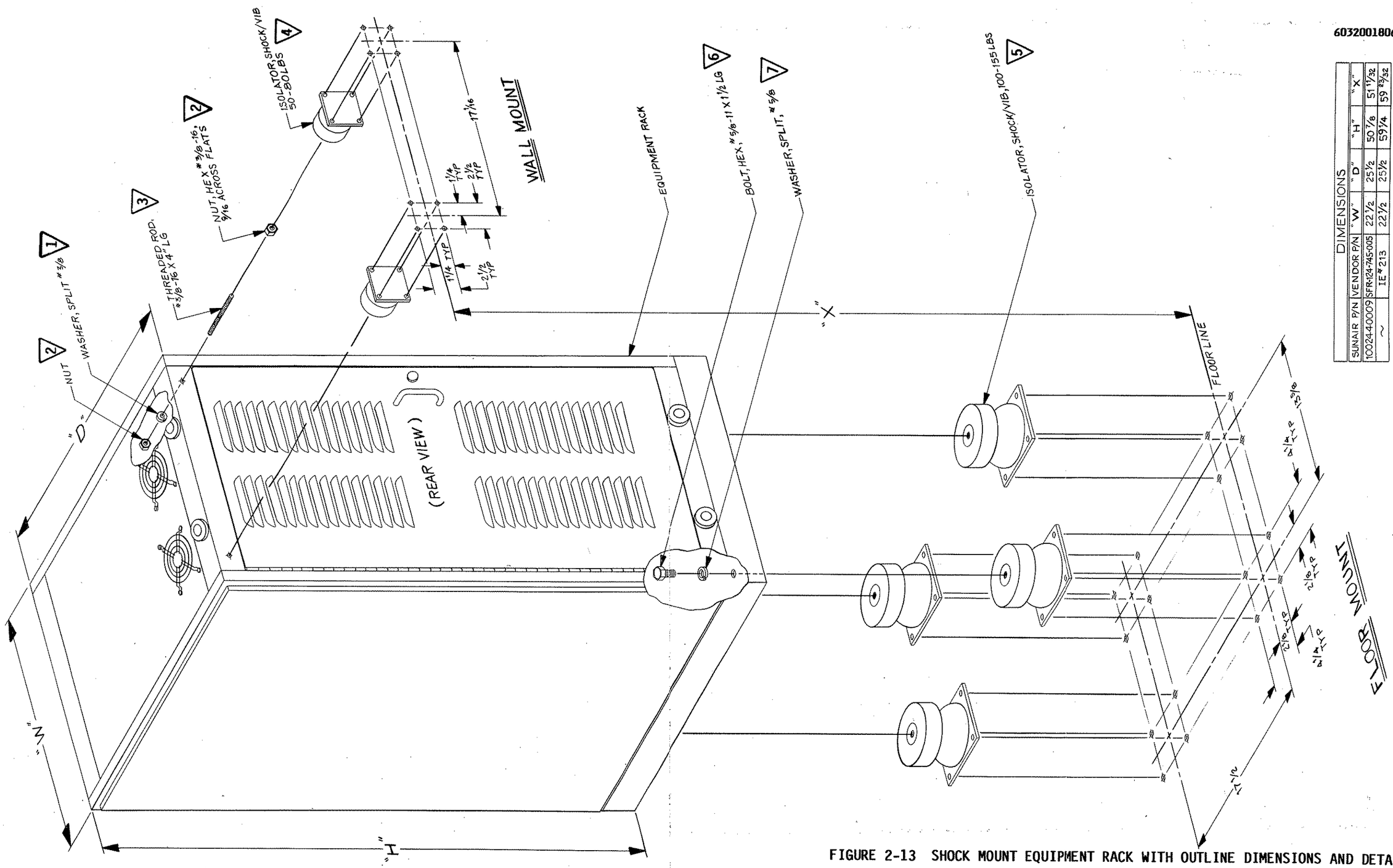

DIMENSIONS

SUNAIR P/N	VENDOR P/N	"W"	"D"	"H"	"X"
100244-0009	SFR-124-745-005	22 1/2	25 1/2	50 7/8	51 11/32
~	1E #213	22 1/2	25 1/2	59 1/4	59 13/32

FIGURE 2-13 SHOCK MOUNT EQUIPMENT RACK WITH OUTLINE DIMENSIONS AND DETAILS

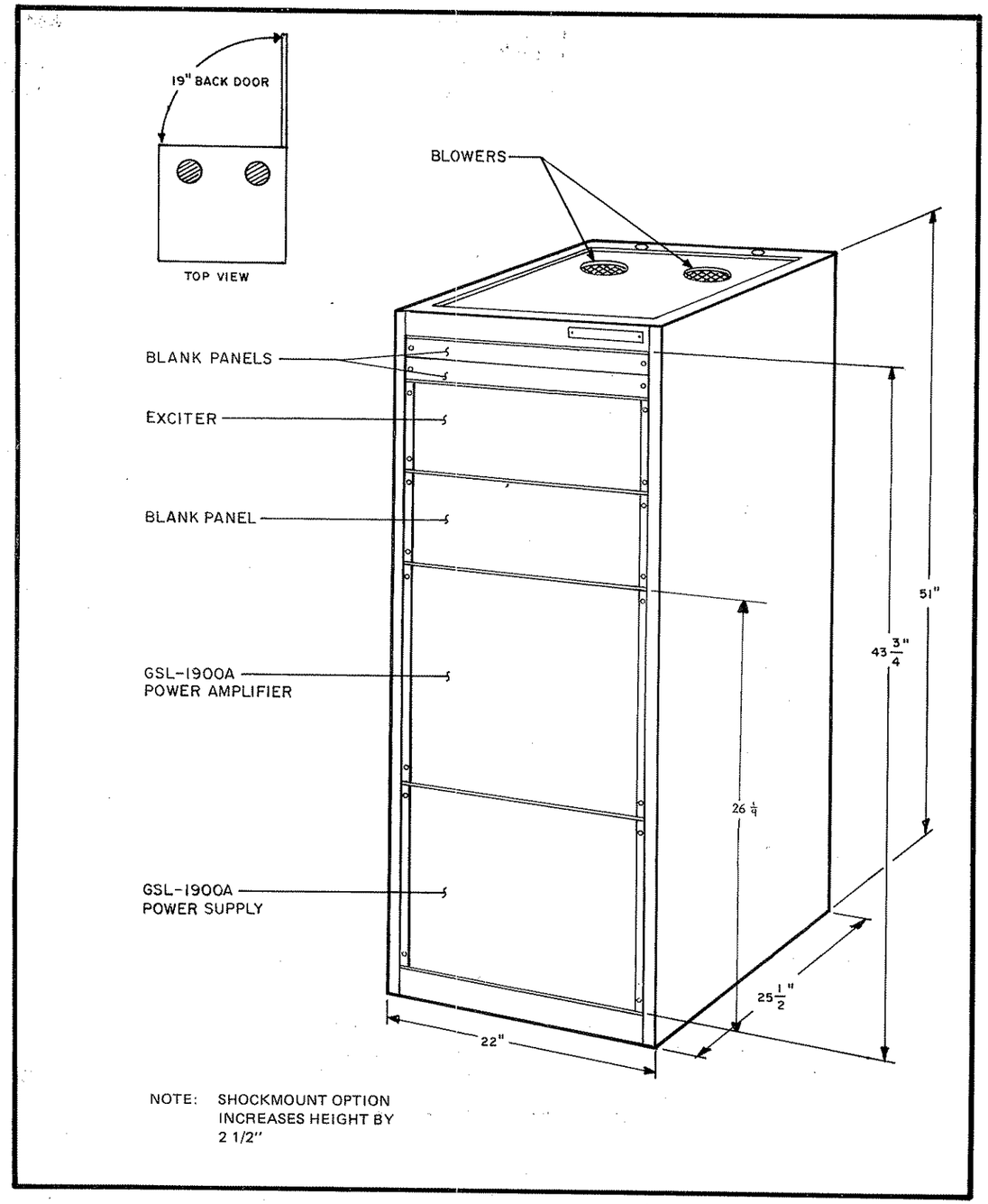

SHOCKMOUNT KIT EQUIPMENT RACK P/N 6032090892

ITEM NO	SUNAIR PART NUMBER	DESCRIPTION	QTY
1	0501650008	Washer, Split 3/8	2
2	0501700005	Nut, Hex 3/8-16 x 9/16 AF	4
3	0542880644	Rod, Thd 3/8-16 x 4 Lg	2
4	0841810001	Isolator, Shock/Vib. 50-80 Lbs.	2
5	1001280016	Isolator, Shock Vib. 100-155 Lbs.	4
6	1001290003	Bolt, Hex 5/8-11, 1½ Lg	4
7	1001300009	Washer, Split 5/8	4
	1002980011	Installation Instructions	1

NOTE: The LPA-1900A and PS-1900A must stack together for standard E.I.A. rack space.

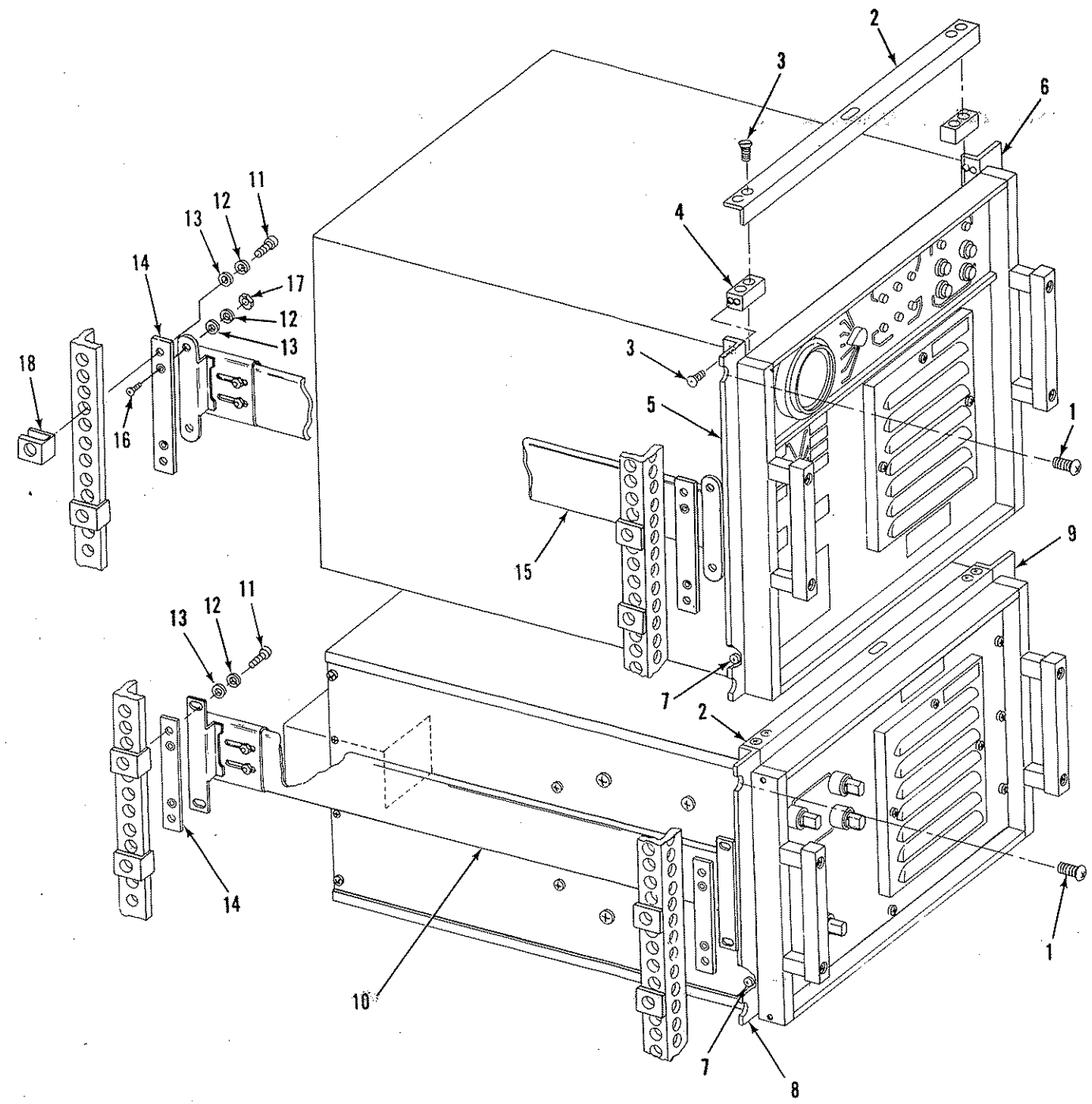

RACKMOUNT KIT (3 PIECE SLIDES) P/N 60320900XX
RACKMOUNT KIT (2 PIECE SLIDES) P/N 60320903XX

ITEM NO	SUNAIR PART NUMBER	DESCRIPTION	QTY
1	0538870001	Screw, Ornamental 10-32 x ½ Lg	8
2	10028400XX	Trim, Angle	2
3	0500620423	Screw, Machine FH 4-40 x ¼ Lg Blk	16
4	1002990025	Block, Trim Adapter	4
5	10028600XX	Bracket, LPA Left	1
6	10028700XX	Bracket, LPA Right	1
7	0500910065	Screw, Machine PH 8-32 x 3/8 Lg	16
8	10028500XX	Bracket, PS Left	1
9	10028500XX	Bracket, PS Right	1
10	6032041204	Slide, Chassis, Rrackmount PS, 2 Piece	1 Pair
11	0500940100	Screw, machine PH 10-32 x 5/8 Lg	16
12	0500070008	Washer, Lock #10	24
13	0500220000	Washer, Flat #10	16
14	1002860032	Shim, Plate	8
15	1006050001	Slide, Chassis, Rackmount LPA, 3 Piece	1 Pair
	6032041301	Slide, Chassis, Rackmount LPA, 2 Piece	1 Pair
16	0500950075	Screw, Machine FH 10-32 x 7/16 Lg	8
17	0501940006	Nut, Hex 10-32 x 3/8 AF	8
18	0538750006	Nut, Clip 10-32	24
	1000020029	Installation Instructions	

FIGURE 2-14 RACK MOUNT SLIDE DETAILS

SECTION III

OPERATION

3.1 GENERAL

This section provides information and instructions as required for operation of exciter, GSL-1900A Linear Power Amplifier and GCU-1935 Antenna Coupler. Refer to the Exciter and the GCU-1935 Operation and Maintenance Manuals for detailed information regarding operation of these units.

3.2 FUNCTION AND LOCATION OF CONTROLS AND INDICATORS

Table 3-1 lists front panel controls and indicators on the LPA-1900A. Control and indicator locations are shown on Figure 3-1.

3.2.1 KW CONTROL UNIT, 1A2

The KW Control Panel, 1A2, which is designed to mount in the space provided in the front panel of the exciter duplicates the following control functions:

a) Filament Power ON-OFF
b) Plate Power ON-OFF
c) Test Meter Selector Switch, forward and reflected power
d) All indicator lamps on the LPA-1900A.

The control panel is shown in Figure 3-2.

3.2.2 FUSE INDICATORS

Neon type blown fuse indicators are provided on the fuseholders for fuses 2F1 to 2F4, which are located on the front panel of power supply PS-1900A. 2F5 has an incandescent blown fuse indicator. See Figure 3-1.

3.3 OPERATING THE GSL-1900A INTO A 50 OHM ANTENNA

3.3.1 EXCITER OPERATIONAL PRECAUTIONS

The exciter will operate directly into the antenna when the GSL-1900A plate is not turned on. For this reason the operating instructions given in the applicable manual should be read and understood before proceeding. The GSL-1900A RF output network will provide a match between the tube and a 50 ohm nominal load with VSWR as high as 2:1. The network adjustment is automatic.

3.3.2 GSL-1900A OPERATION WITH 50 OHM ANTENNA

The procedure which follows requires level adjustments to be made at the exciter where applicable. At the exciter, connect a microphone to 1A1J1, a CW key to 1A1J3 or 600 ohm audio source to 1A8J2.

a) Turn the VOLUME and XMIT GAIN controls fully counterclockwise. Turn the RF GAIN control fully clockwise.

b) If an internal speaker is to be used, set the SPEAKER switch to the ON position. If a handset or earphones are to be used, disable the speaker by placing the SPEAKER switch in the OFF position.

c) Set the six frequency control switches to the desired operating frequency. Set the VFO control to the "IN" (OFF) position.

d) Turn on the GSL-1900A Filaments, wait approximately 3 minutes for Plate

CONTROL OR INDICATOR	FUNCTION
Filament power on-off, 1A3S1, 1A3S2.	Momentary contact pushbutton switches that control filament, blower and low voltage power. Red-on, black-off.
Plate power on-off, 1A3S3, 1A3S4.	Momentary contact pushbutton switches that control plate and screen power. Red-on, black-off.
Test meter selector switch, 1A3S5.	An eight position rotary selector switch used with the multimeter to read any of the following functions on test meter, 1A3M1. 1. Grid RF voltage 2. Plate RF voltage 3. Grid current 4. Screen current 5. Plate current 6. Plate voltage 7. Forward power 8. Reflected power
Local-remote bandswitch control switch, 1A3S7.	A two position toggle switch which is used to transfer the GSL-1900A bandswitch control between local and remote (exciter) positions.
Band selector switch, local 1A3S6.	An eight position rotary selector switch used to select any one of eight bands from the LOCAL position.
50 ohm load selector switch, S6. Located on bandswitch motor mounting plate.	A two position locking type toggle switch used to activate the 50 ohm load in the GCU-1935 antenna coupler for test use. Down position activates load.
Bias adjust potentiometer, R8. Located on rear panel of RF unit.	A potentiometer used to adjust the D.C. operating bias voltage for the power amplifier tube.
FILAMENT ON lamp 1A3DS1.	A green pilot lamp which lights when filament power is applied.
PLATE ON lamp 1A3DS2.	A red pilot lamp which lights when plate voltage is applied.
PLATE READY lamp 1A3DS8.	A white pilot lamp which lights after the 3 minute filament warm-up period has expired and the plate interlock switch is closed.
TUNING LAMP 1A3DS3.	A white pilot lamp which "winks" during a bandswitch change and glows steady when an automatic tune cycle is in progress.
READY lamp 1A3DS4.	A green pilot lamp which indicates that 200 watts tune power was attained before the fault timer expired.
TUNE FAULT lamp 1A3DS5.	An amber pilot lamp which indicates that the tune fault timer did not trigger upon switching the exciter mode selector switch to KW TUNE, or the tune fault timing period has expired before the power output reached 200 watts tune power.
VSWR FAULT lamp 1A3DS6.	An amber pilot lamp which indicates that a preset reflected power threshold has been exceeded, (usually 160-180 watts equivalent to 2:5 VSWR).
DC O/L FAULT lamp 1A3DS7.	An amber pilot lamp which indicates that a preset value of power amplifier plate and/or screen current has been exceeded. (Set for 40 ma screen current.)
LOCAL LAMP	Indicates when the band selector switch is in the local position or when the 50 ohm load seldctor switch (S6) is in the 50 ohm position

TABLE 3-1 CONTROL AND INDICATOR FUNCTIONS, LPA-1900A

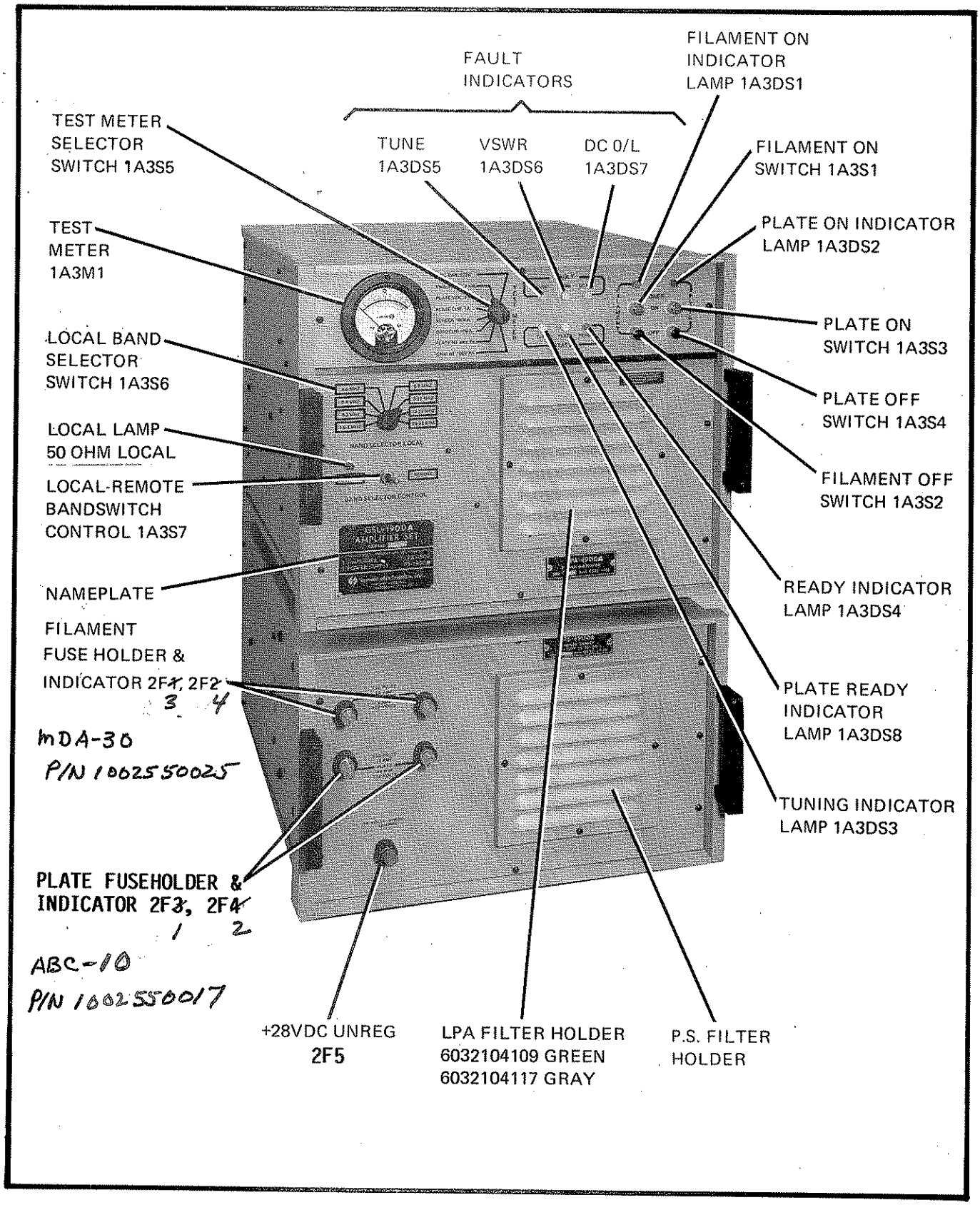

FIGURE 3-1 CONTROLS AND INDICATORS GSL-1900A FRONT PANEL

Ready then turn on the GSL-1900A plates and place the exciter mode switch in the KW TUNE position. The tuning lamp should illuminate.

e) After the READY lamp is lighted, set the MODE switch to the desired operating mode, LSB, USB, AM or CW.

f) Set the VOLUME control for a comfortable listening level.

g) RF GAIN Control: For normal operating conditions the RF GAIN Control may be left set in its maximum clockwise position as this will give the maximum receiver sensitivity. When receiving a strong signal, best results are usually obtained if RF GAIN is set so that the signal, when present, increases the meter reading 1 to 2 "S" units above the "no signal" reading.

h) If being used in LSB or USB modes: Speak into the microphone and advance the XMIT GAIN until 1000 watts (as indicated on the front panel meter) is obtained. Turn the gain approximately 20 degrees beyond this point. Do not advance the gain beyond this point as no further power output will occur and distortion may be introduced.

If being used in the AM mode: Follow the same procedure as with LSB and USB above, except approximately 300 to 400 watts of carrier should be indicated on the meter when not talking. Do not modulate over 1000 watts.

If being used in the CW mode: The level of sidetone to the transmit section is preset at the factory. No adjustment of the XMIT GAIN control is necessary. Automatic switching of the transceiver from receive to transmit will occur when the key is depressed. When the key is depressed, a sidetone (approximately 1 KHz) should be audible.

NOTE

If being used with a remote audio input, the transmit level adjust on the Audio Board should be used instead of the XMIT GAIN control on the front panel. If operation of the unit is anticipated over a wide range of frequencies, this adjustment should be made at the highest frequency since the system gain (but not the power output) falls off slightly with frequency. When the point of maximum power is found, advance the level approximately 2 turns beyond this point to set the ALC.

j) VFO Operation: When receiving a signal from a transmitter with synthesized frequency control, it is seldom necessary (or desirable) to use the VFO vernier tuning control. It should be left in its "IN" (OFF) position. When receiving signals from nonsynthesized transmitting equipment, some error in transmitted frequency may exist. If necessary, pull out the VFO control and adjust for the best receive signal quality. Approximately ±5 KHz range is provided around the set frequency.

NOTE

When communicating in CW with a station keying its carrier, rather than a 1 KHz sidetone, it may be necessary to decrease the frequency 1 KHz. When communicating between synthesized equipment, no correction is necessary.

CAUTION

Whenever the operating frequency is changed, the GSL-1900A must be retuned. Failure to tune the power amplifier could damage the RF output network under some conditions of mistuning.

3.4 OPERATING THE GSL-1900A WITH THE GCU-1935 ANTENNA COUPLER

If the antenna in use does not present a 50 ohm load to the GSL-1900A within a 2:1 VSWR range, the antenna system must be matched to the power amplifier using the GCU-1935 Antenna Coupler. Refer to the GCU-1935 Operation and Maintenance Manual p/n 6029000501 for installation instructions. Figure 2-9 shows Sunair's KW Longwire Antenna Kit p/n 1003090010 installed. Also available is a 35 foot fiberglass antenna.

NOTE

The GSL-1900A must be adjusted to extend the systems tuning time to 10 seconds to compensate for the additional time needed to tune the coupler. (Refer to paragraph 4.7.2.) This adjustment is made at the factory when the GSL-1900A is ordered with a GCU-1935.

3.5 OPERATION OF THE GSL-1900A WITH EXCITERS OTHER THAN SUNAIR MODELS

If another exciter is to be used with the GSL-1900A, slight adjustments may be required for the ALC, ACC and tune power. Refer to Section V.

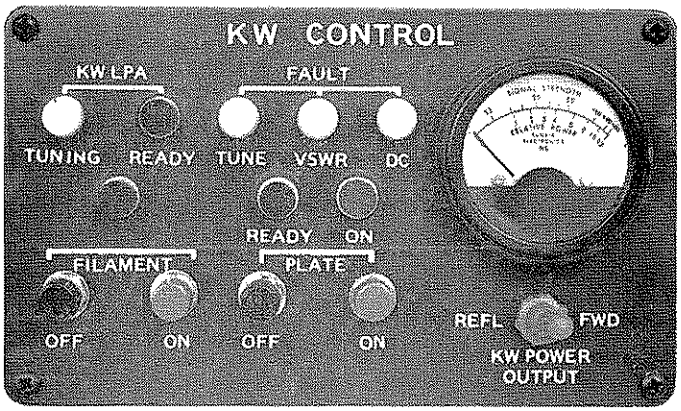

FIGURE 3-2 KW CONTROL UNIT, 1A2

TABLE 3-2 TYPICAL MULTIMETER INDICATIONS

POS	FUNCTION		NOMINAL INDICATION
1	Grid RF	100V PK	70V MAX 40to70 nominal
2	Plate RF	4000V PK	2300V ~~2000V~~
3	Grid Current	10MA	1.5MA
4	Screen Current	-100MA	-12MA
5	Plate Current	1 AMP	.65A
6	Plate Volts DC	4KV	2.4KV
7	FWD PWR	1.2KW	1.0KW
8	Refl PWR	120W	0W(50 ohm load)

Typical test meter indications at 4888 KHz, single-tone signal, keydown conditions: If readings obtained differ materially from the above nominal values, shut down the equipment and inform maintenance personnel.

4
.63
12
24
25 20

SECTION IV

THEORY OF OPERATION

4.1 INTRODUCTION

The GSL-1900A is a single stage, linear power amplifier. The power amplifier stage, input and output RF networks, wattmeter, printed circuit boards, blower and control panel are located in a single chassis, LPA-1900A. The heavier AC power supply components are mounted in a separate chassis designated as the PS-1900A power supply, unit 2. In addition, an extended control panel, 1A2, is provided which mounts in the exciter front panel. This remote control unit provides complete control functions for the GSL-1900A from the exciter's location.

4.2 RF POWER AMPLIFIER CIRCUITS

4.2.1 GENERAL

Refer to Figure 4-1, Functional Block Diagram.

The power amplifier consists of a single type 4CX1500B, ceramic envelope power tetrode which provides a power gain of 25. The grid drive signal is developed across a 50 ohm non-inductive load resistor. The output network is the Pi-L configuration. The very low grid impedance eliminates the requirement for neutralization. The screen grid is connected directly to the RF chassis, and a negative cathode supply is used to provide screen potential. The cathode supply is then connected in series with the plate supply which results in a heavily swamped, stable, screen voltage. Vacuum variable capacitors are used in the output network to improve operational reliability.

4.2.2 RF INPUT CIRCUIT

Refer to Figure 5-22.

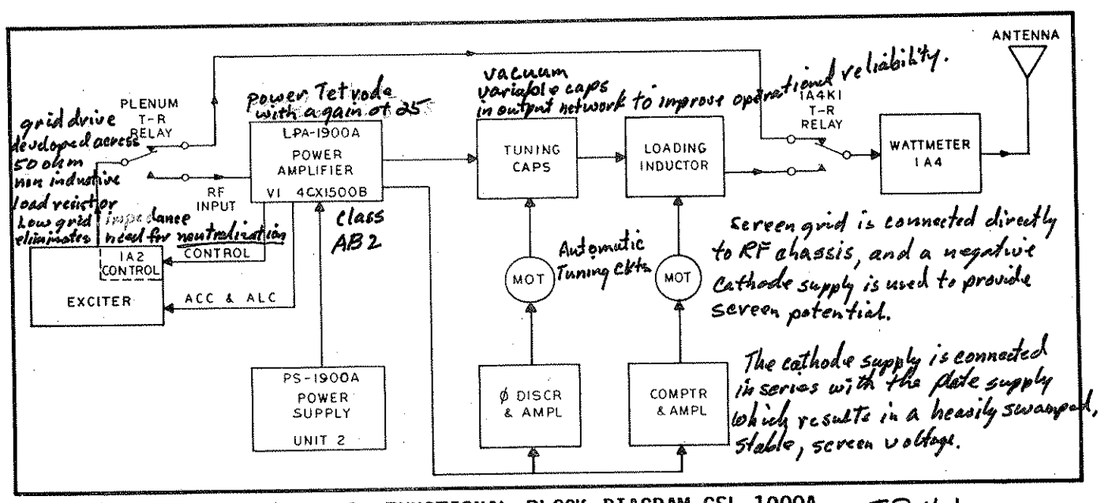

FIGURE 4-1 FUNCTIONAL BLOCK DIAGRAM GSL-1900A TP 4-1

The RF input signal is connected to the power amplifier grid through a transmit/-receive relay circuit. K1, when energized, applies the input drive voltage to the grid of the power amplifier through a compensation network. The compensation network consists of C56, L11, C55, R1, L3 and C4. The network compensates for the tube socket capacity and assures a near 50 ohm input impedance over the frequency range of 1.6 to 30.0 MHz. L10 and R7 are used to provide the cut-off and operating bias for the grid.

When the power amplifier is not in the transmit mode, relay K1 removes the input drive from the grid and switches it to relay 1A4K1, located in the wattmeter. In the receive mode, relay 1A4K1 connects the output of the exciter, bypassing the LPA, except for the wattmeter. Relay K1 is located in the grid plenum area while 1A4K1 is in the wattmeter compartment. K1 and 1A4K1 are 12 VDC relays and are connected in series operated from the regulated 24 VDC. Relay K3 (T/R AUX) is located in the plenum and controlled by the keyline. When K3 is energized by the keyline, it energizes K1 and 1A4K1.

4.2.3 POWER AMPLIFIER

Refer to Figure 5-22.

The power tetrode used in the power amplifier stage is specifically designed for low intermodulation distortion and low grid interception. These characteristics make the 4CX1500B an especially suitable tube for radio frequency linear service. The tube is operated class AB2, however, the normal grid current is typically only 1.5 ma.

The tube is mounted vertically on the RF compartment deck so that the plate extends into the RF network area and the control grid and filament extend into the grid plenum. The screen grid is flush with the RF deck and is grounded to provide internal and external shielding between the input and output circuits.

The power amplifier tube is cooled by forced air from Blower B1, which is located to accept air input from a filter located on the front panel. The blower is used to pressurize the grid plenum and thereby force air through the external anode cooling fins of the tube. The power amplifier operates class AB2 to reduce distortion, but maintain a reasonable plate efficiency. The plate receives +2500 volts nominal DC from the power supply through RF choke coils, L1 and L2.

4.2.3.1 Bias Circuit

Refer to Figures 5-22 and 5-32.

The screen grid is at ground potential. A negative 250 volts is applied to the cathode which results in an effective 250 volts screen voltage and a net 2750 volts plate to cathode. The 250 volt cathode supply is located in the power supply. (250 volts is nominal value and will drop as low as 225 VDC under load.) An adjustable 150 VDC power supply is connected from the control grid to the cathode.

4.2.4 LOW VOLTAGE RECTIFIER ASSEMBLY (1A10)

Refer to Figure 5-22.

The bias supply consists of transformer T1 and diodes CR5, CR6, CR7 and CR8. R2 and C2 provide the necessary filtering while R1 is a bleeder resistor. R3 is a current limiting resistor that connects the positive end of the bias supply to the negative side of the cathode supply. When the power amplifier is unkeyed, the full bias is applied to the grid through R8, R7 and L10. This is enough to cut off the plate current flow. When keyed, K1 is energized and one end of R8 is connected to the (+) side of the bias supply. This action reduces the negative

voltage on the grid. R8 is adjusted to provide the proper idle current, 0.3 amperes.

4.2.5 RF OUTPUT NETWORK

Refer to Figures 5-16 and 5-22.

The power amplifier RF output is coupled to the antenna through a Pi-L network which consists of a variable tuning capacitor C25, tuning inductors L4, L5 and L6, loading capacitor C20, and loading inductors L8 and L9. The purpose of the Pi-L output network is to attenuate RF harmonics and to match the power amplifier output impedance to the 50 ohm transmission line with a minimum of circuit loss. The plate output from the power amplifier tube is coupled to the network through blocking capacitors C24 and C70. Various inductor taps and padder capacitors are selected by the bandswitch, S2. The tuning and loading capacitors, C20 and C25, are mechanically ganged and motor driven to provide the plate tuning adjustment. The ratio of C20 to C25 should be approximately 2.5:1

1000 / 400

400) 1000 (2.5
800
2000

4.2.5.1 Auxiliary Loading Capacitors and RF Bandswitching

Because of the limited value of L6 (15 µh) auxiliary loading capacitors must be used in parallel with the variable capacitors C25 and C20. These are switched by S2A and S2D. Table 4-1 lists the auxiliary capacitors and the actual capacitance range of the variable and fixed capacitors for each band.

Switch wafers S2B and S2C select the proper value of L6 and L5 for the frequency range being tuned. L4 is a small value inductor that increases the value of L5 for band 8. Auxiliary loading inductor L9 effectively increases the value of the motor driven loading inductor L8. L9 is used on bands 1 through 5 and is shorted out for all other bands. L7 is a static drain choke.

4.2.5.2 Impedance Matching and Theoretical Midpoint

Refer to Figure 4-3.

Freq. Range (MHz)	Band	C25 Range	C25 Aux CAPS.	PLATE RANGE	C20 RANGE	C20 Aux CAPS	Loading
1.6-1.999	1	10-400pf	500pf	510-900pf	7-1000pf	1250pf	1257-2250pf
2-2.999	2	10-400pf	200pf	210-600pf	7-1000pf	550pf	557-1550pf
3-3.999	3	10-400pf	0	10-400pf	7-1000pf	250pf	257-1250pf
4-5.999	4	10-400pf	0	10-400pf	7-1000pf	50pf	57-1050pf
6-8.999	5	10-400pf	0	10-400pf	7-1000pf	50pf	57-1050pf
9-12.999	6	10-400pf	0	10-400pf	7-1000pf	50pf	57-1050pf
13-19.999	7	10-400pf	0	10-400pf	7-1000pf	50pf	57-1050pf
20-29.999	8	10-400pf	0	10-400pf	7-1000pf	50pf	57-1050pf

TABLE 4-1 C25 AND C20 CAPACITANCE RANGES FOR EACH BAND

The nominal desired plate impedance is 1900 ohms with zero phase angle. C25 is in shunt with the plate and will reduce the real part of the impedance to approximately 100 ohms with a capacitive reactance. L4, L5, L6 in series will tune out the reactive portion but will not change the real part. The junction of L6 and C20 is the midpoint and is near 100 ohms. C20 again reduces the real part to 50 ohms with a capacitive reactance. L8, L9 resonate the reactive portion to produce an output impedance of 50 ohms with zero phase angle. The midpoint impedance can be measured and is an indication that the ratio of C25 to C20 is the proper value.

As stated previously, the nominal desired plate impedance is 1900 ohms with zero phase angle. This is generally correct at the mid frequencies around 12 MHz. At some high and low frequencies, the optimum plate impedance is usually the conjugate impedance of the output impedance of the tube. Therefore, at some frequencies, the phase detector and the loading comparator are purposely offset to achieve the best power output from the amplifier.

4.2.6 WATTMETER

Refer to Figure 5-22.

The RF output from the matching network passes through the RF Wattmeter Assembly, 1A4. The purpose of the wattmeter circuit is to detect and provide monitoring information on the forward and reflected power on the transmission line. Separate forward and reflected outputs are provided.

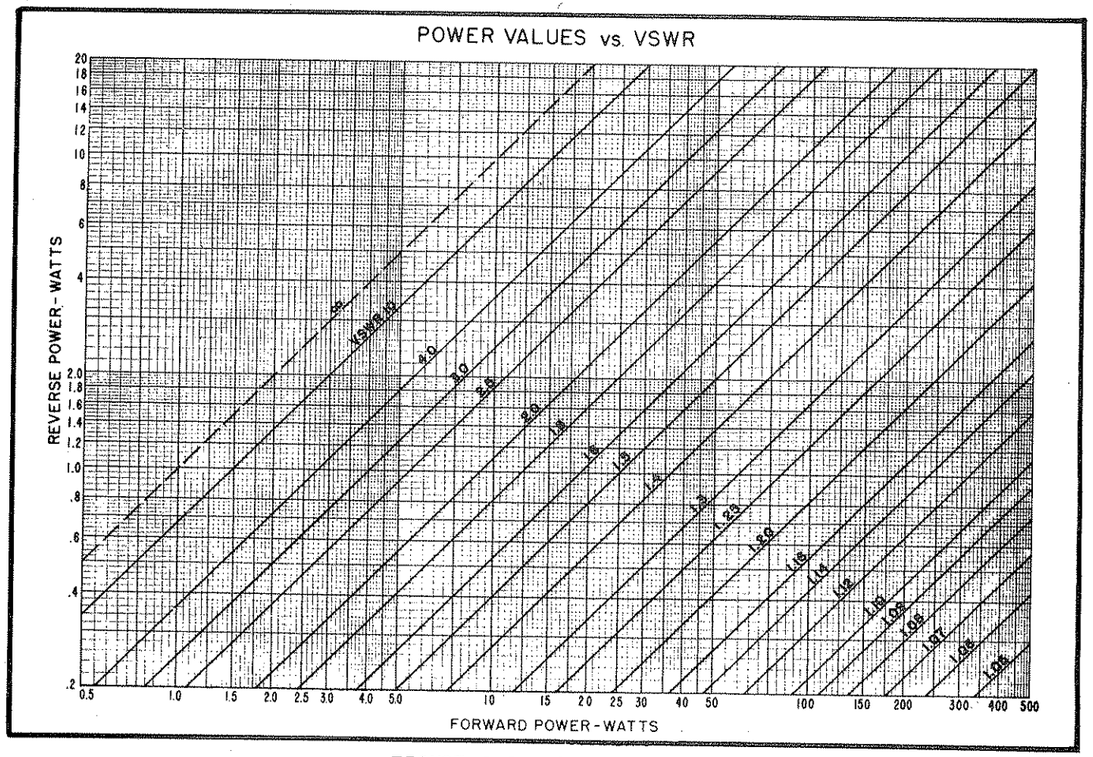

FIGURE 4-2 VSWR NOMOGRAPH

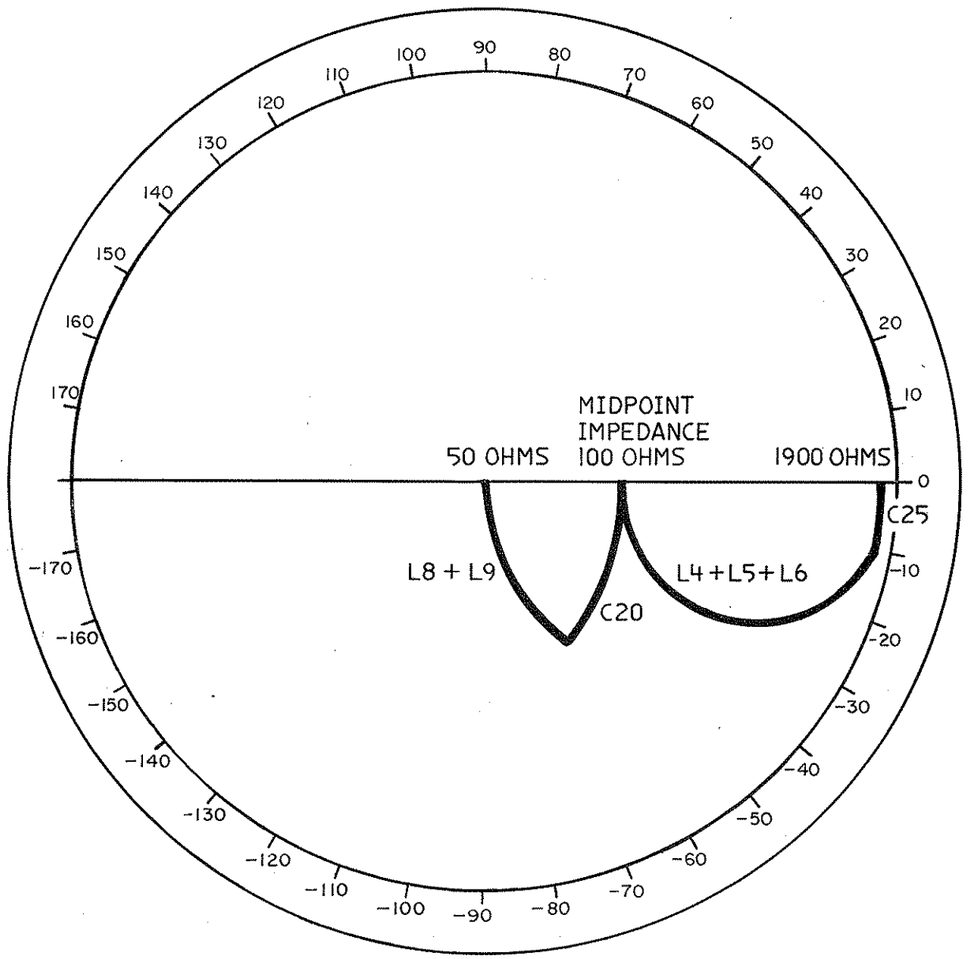

IMPEDANCE COORDINATES – 50 OHM CHARACTERISTIC IMPEDANCE

FIGURE 4-3 THEORETICAL IMPEDANCE MATCHING

4.2.6.1 Wattmeter Operation

Transformer T1 generates an AC voltage that is proportional to the current through the line. The voltage developed across R2 is used for the forward voltage while the voltage across R1 (180° out of phase with the voltage across R2) is used for the reflected current sample.

4.2.6.2 Forward Power Detection

The voltage sample for the forward power sample is obtained from voltage divider C2, C4. The voltage across C4 is in phase with the current through the line when the line is terminated with a resistive load. The current sample across R2 is 180 ° out of phase with that across C4. Therefore, diode CR2 will have maximum output when the wattmeter is terminated with a resistive load. Capacitor C2 is adjusted to produce the same voltage across C4 as exists across R2. The forward power indication will be maximum when the load is 50 ohms and non reactive.

4.2.6.3 Reflected Power Detection

The voltage sample developed across C3 is the same phase as that across C4. However, the current sample across R1 is also the same phase. This means that diode CR1 will have the same phase for both samples. If C1 is adjusted (with a 50 ohm non reactive load) to produce the same voltage across C3 as that which exists across R1, diode CR1 will not produce any DC voltage. The reflected power output indication will be nulled or minimum for a 50 ohm non reactive termination.

It is interesting to note that, if the input and output are reversed, the detector functions will reverse. That is, the forward detector will become the reflected detector. This is caused by the reversal of the direction of current flow in the line.

4.2.6.4 Load VSWR

To determine load VSWR:

$$\text{VSWR} = \frac{1 + \left(\dfrac{\text{Reflected Power}}{\text{Forward Power}}\right)^{\frac{1}{2}}}{\left(\dfrac{\text{Reflected Power}}{\text{Forward Power}}\right)^{\frac{1}{2}}}$$

A graph of this function is given in Figure 4-2.

4.3 AUTOMATIC TUNING CIRCUITS

As shown in Figure 4-1 there are two motor driven tuning circuits. The tuning capacitors, C25 and C20, are driven from a signal generated by the phase detector. The phase detector is located on the RF Sensor Board 1A7 in the plenum. The loading inductor is driven by a signal from the loading comparator. The loading comparator compares the magnitude of the grid drive signal with the magnitude of the RF plate voltage. The circuitry for the loading comparator is located on the Level Control Board 1A9. Because of the limited capture range of the phase detector, a coarse pre-position circuit is provided. This circuit causes the driven elements to position to a capacity and inductance that is larger than needed for the frequencies in a particular band. A capacitor force function then sweeps the two variable capacitors through the tuning range until the phase detector output is within the capture range. A complete tuning cycle consist of pre-position, plate tuning, and loading. Each function will be described in the following paragraphs along with circuit description.

4.3.1 PRE-POSITION CIRCUIT

Refer to Figure 4-4.

Figure 4-4 is a simplified schematic illustrating the relationship between the pre-position, tune control, level control, servo amplifier, and motor driven elements during the pre-position period. A tune cycle is initiated by placing the exciter mode switch in the KW TUNE position. This places a ground on the KW tune line (1A6 pin M) and initiates the Tune Timer. Relay 1A6K1 is energized and places a ground on the CRS KEY line (1A6 pin 14). This action initiates the pre-position cycle by causing 1A11U1 to energize 1A11K1.

A resistive bridge servo is used for the pre-position function. When 1A11K1 is energized, the signal input to the servo amplifiers (pin J) is connected to the wiper of the follower pot. At the same time, the servos are enabled and the motors will run until the follower pot wipers are in the same position as the selected control potentiometer on 1A11. These control pots are R2, R3 and R4 on 1A11. R2 is used for band 8, R3 for the main band and R4 for band 7. Figure 4-4 is shown with a band 8 control selected. Bandswitch wafer S2G grounds the wiper of the pre-position control being used. (The ground is returned to the servo amplifier return.) It should be noted that the pre-position reference supply is floating with respect to ground and each reference voltage (+VREF and -VREF) can be any value between 0 and ±24V depending on where the wiper of the selected control pot is adjusted. Since the servo amplifiers are referenced to ground, the motors will be able to run both directions. The pre-position period lasts for approximately one second, after which 1A11K1 de-energizes. The transmitter is keyed on at this time.

4.3.1.1 Capacitor Force Function

Refer to Figures 4-4 and 5-29.

When 1A11K1 is de-energized at the end of the pre-position time, circuitry on 1A11 causes 1A11K2 and K3 to be energized. K3 transfers the control of the reference power supply from R2, R3 or R4 to R6. R6 is the capacitor force control. K2 connects the wiper of the plate tuning follower pot to the input of the tuning servo and the plate tuning motor sweeps the two capacitors out toward minimum capacity. At the end of the pre-position period the transmitter was keyed on and there will be an input to the plate comparator located on 1A9. I_b (+) and I_b (-) is a sample of the tube plate current while the plate sample input to 1A9 is an indication of the RF plate voltage on the tube. When the output of the plate comparator (1A9 pin F) drops to zero, 1A11K2 and K3 will de-energize and the output of the phase detector will be connected to the input to the plate tuning servo. When this occurs the plate will final tune, controlled by the phase detector. The plate comparator output will not drop to zero until the peak RF plate voltage is up to required tune power.

The loading servo motor does not run during the capacitor force period because it is prevented from doing so by the loading lockout relay, 1A9K1.

4.3.1.2 Detailed Theory of Operation of Other Circuitry on Pre-Position Board

Refer to Figure 5-29.

a) Pre-position Timer Circuit

As stated previously, the pre-position cycle is initiated by a ground on the CRS KEY line, 1A11 pin S. This ground via CR2, causes current to flow in R10 and R12, and Q3 conducts applying +24 volts on pins 5 and 6 of U1. U1 is the pre-position timer and is adjusted to approximately 1 second by the time constant R1, C1. During the 1 second interval, +24 volts is applied to pins 1 and 7 of U1 and relay K1

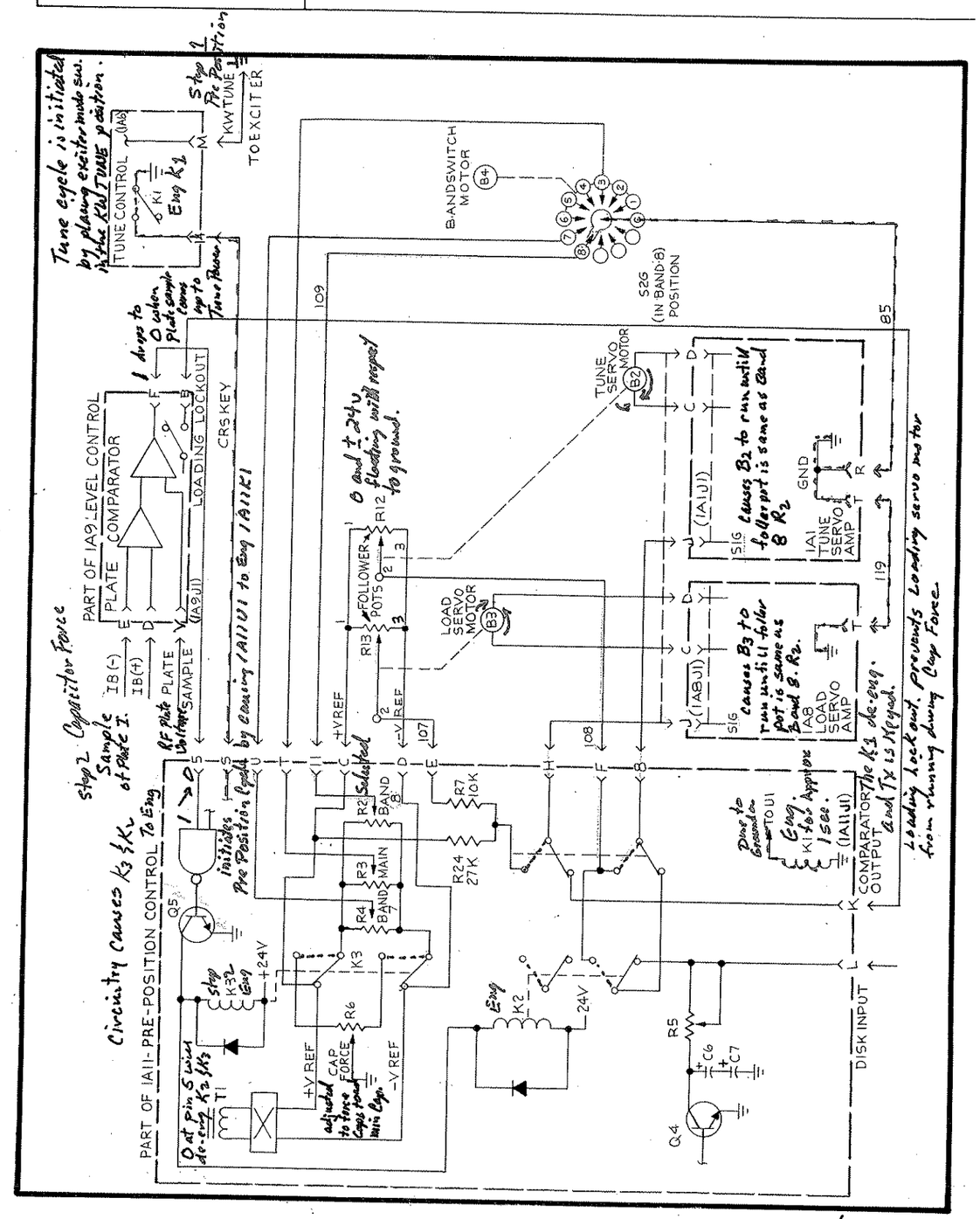

FIGURE 4-4 PRE-POSITION CIRCUIT, SIMPLIFIED TP 4-4

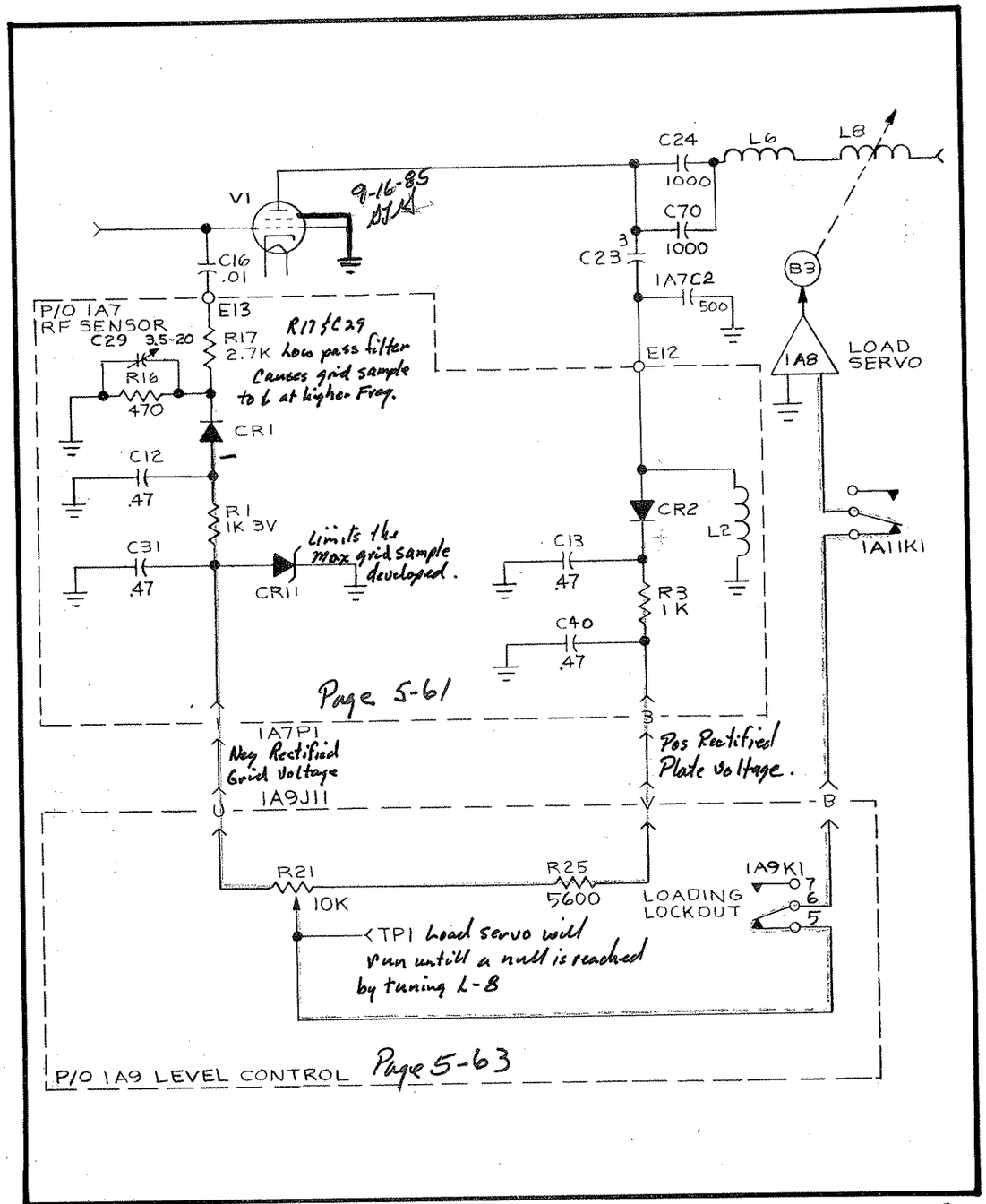

FIGURE 4-5 POWER AMPLIFIER PLATE LOADING (SIMPLIFIED) TP 4-5

4.3.2.2 Loading Lockout

The power amplifier loading comparator signal described in the preceding paragraph is not correct unless the plate tuning is adjusted to the optimum plate phase angle. The purpose of the loading lockout circuit is to prevent the loading from moving until the plate circuit is tuned. Refer to Level Control Board 1A9 schematic Figure 5-28. Two circuits are provided to insure that the plate tuning will be adjusted before the loading. Timer 1A9U2 is triggered by the tune key ground signal whenever a tune sequence is initiated. The timing period is approximately one second. The timer output is connected to the loading lockout relay driver, 1A9Q4, which enables relay, 1A9K1. The timing sequence allows the tuning servo system to start its adjustment while the loading is held off. When the tuning motor operates, a permanent magnet on the motor shaft causes the proximity switch, S4, to open and close as the shaft rotates. The switch supplies a pulsed ground to the coupling capacitor, 1A9C5, which in turn charges 1A9C6 through the blocking diode 1A9CR6. When the tuning motor is operating, the relay driver is turned on by the base voltage supplied by 1A9C6. It can be seen that the timer will overlap the charging of 1A9C6 effectively locking out the loading function.

4.3.3 POWER AMPLIFIER PLATE TUNING

A simplified version of the power amplifier phase discriminator is shown on Figure 4-6. The two shunt capacitors, C20 and C25, are ganged and driven by the plate tuning servo system which consists of the tuning drive motor, B2 and servo amplifier 1A1. The error voltage for tuning is supplied by the phase discriminator circuit of 1A7. The phase discriminator tuning method is based on the principle that the amplifier output is exactly 180 degrees out of phase with the input when the plate tuning network is tuned to resonance. (Atthe input frequency.) The phase discriminator compares the input and output phase relationship and provides a DC output voltage to drive the tuning servo system until the plate circuit is tuned to resonance.

In the simplified schematic of Figure 4-6, a sample of the power amplifier grid voltage is obtained from the capacitive divider, C1 and C38. The circulating current in the plate tank capacitor, C25, leads the voltage across it by 90 degrees. This current produces a voltage in toroid coil T3. The secondary current in T3 produces voltage vectors, E_A and E_B, across the phase discriminator load resistors. The grid voltage sample E_S is used as a reference to form a simple quadrature phase detector. Figure 4-6 shows a vector diagram for the resonant and off-resonance conditions. When the tuning network is tuned to the input frequency, vectors E_A and E_B are exactly 90° out of phase with E_S.

Therefore the resultants, V1 and V2, are equal, yielding no DC output. The condition for unequal voltage vectors is shown in the remaining diagram.

4.4 RF SENSOR BOARD 1A7

Refer to Figure 5-27.

The RF Sensor Board is located in the grid plenum and contains the following circuits: phase detector, ACC detector, loading comparator plate sample detector, loading comparator grid sample detector, grid voltmeter drive, and plate voltmeter drive. Each of these circuits will be discussed in the following paragraphs.

4.4.1 PHASE DETECTOR

The phase detector compares a sample of the grid voltage and the plate voltage and has a null (zero volts output) when the plate voltage is 180° out of phase with the grid drive. The grid voltage sample is obtained from capacitive divider C1 and C38. It is fed to the phase detector through R7 and C22. C30 is an

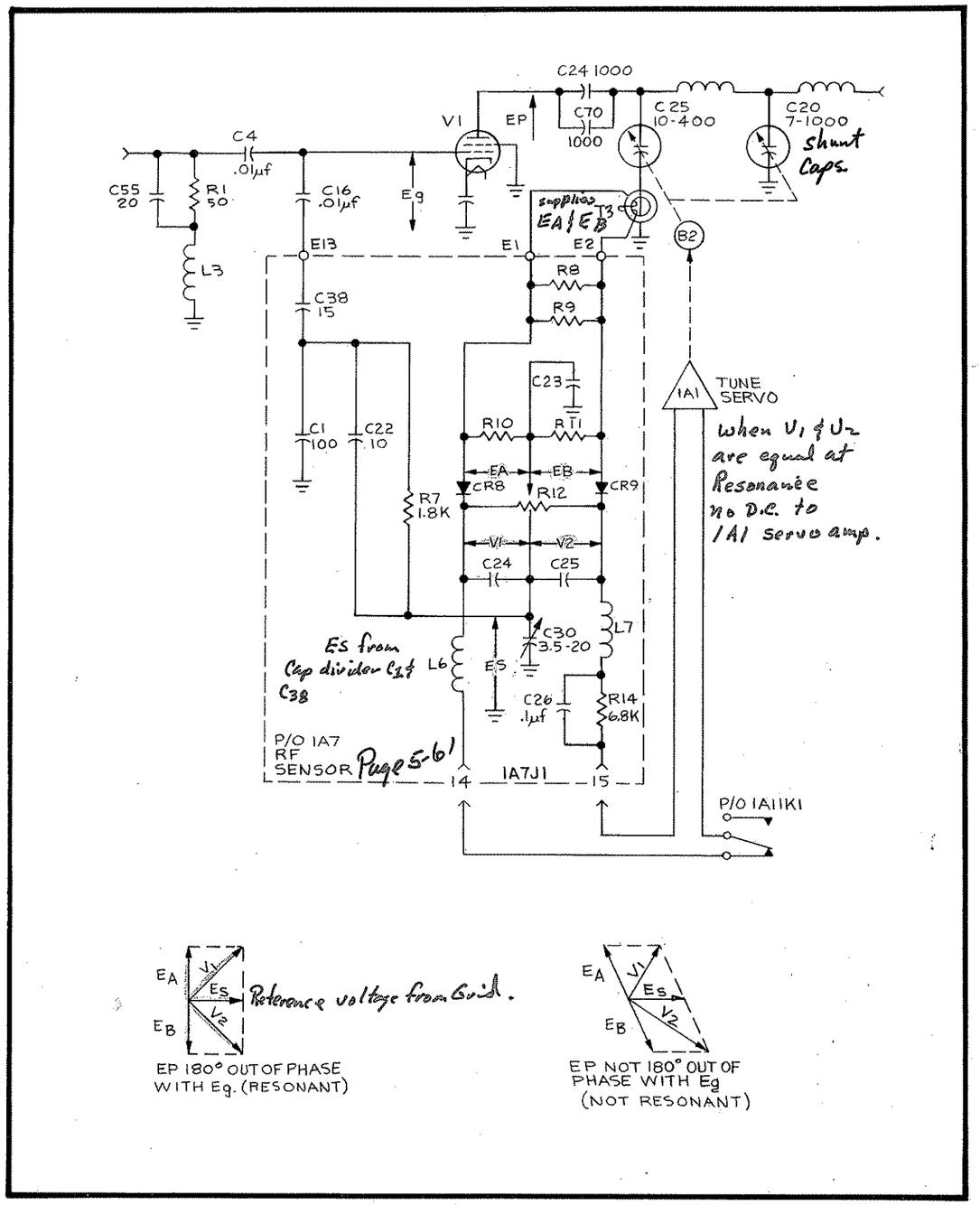

FIGURE 4-6 POWER AMPLIFIER PLATE TUNING GSL-1900A (SIMPLIFIED) TP 4-6

adjustable capacitor used to shift the phase of the grid sample at higher frequencies.

The plate sample is derived from T3 shown in Figure 5-22, located in the plate tuning RF compartment. T3 is a current transformer with the primary a single turn. The current through the primary of T3 is the current through C25 and its auxiliary capacitors. The voltage induced in the secondary of T3 is 90° out of phase with the plate voltage. When the plate voltage is 180° out of phase with the grid voltage, the plate sample from T3 will be 90° out of phase with the grid voltage. The vector diagram shown in Figure 4-6 illustrates the phase relationships between the two samples at resonance and off resonance. E_A and E_B are AC voltages that are 180° out of phase and are produced by T3. E_S is the AC grid sample voltage. E_S is applied to the cathodes of CR8 and CR9 while the plate sample is applied 180° out of phase to the anodes of CR8 and CR9. Diode CR8 will detect the difference voltage across it while CR9 will detect the difference voltage across it. V1, detected by CR8, and V2, detected by CR9, will be equal when E_A and E_B are exactly 90° out of phase with E_S. The phase detector output voltage, measured from 1A7J1 pins 14 and 15, will be zero or null when V1 and V2 are equal. This is the condition for resonance. Figure 4-6 illustrates how V1 and V2 are not equal for conditions of resonance.

4.4.1.1 Phase Detector Components

R8 and R9 are loading resistors used to obtain a flat response from the output of T3. R10 and R11 are used to divide the plate sample equally between CR8 and CR9. C23 is the midpoint AC ground return for the plate sample. R12 is a potentiometer used to balance the phase discriminator and is used to correct for differences in diode rectification efficiencies or unbalance of the plate sample. C24 and C25 are the DC filter capacitors for the rectified voltage from CR8 and CR9. L6 and L7 are RF chokes to isolate the grid sample from the DC output of the phase detector. R14, C26 and R23 is a lead network to improve performance of the tune servo amplifier.

4.4.1.2 Phase Detector Adjustment

The complete adjustment procedure for the phase detector is covered in Section V. R12 and C30 provide a method of adjusting the phase detector so the plate will tune to a particular optimum phase angle, rather than 0°.

4.4.2 ACC DETECTOR

The ACC detector gets an AC input from the plate sample. The detector consist of C27, C28, C15, R5, R15, CR3, CR10 and L3. The ACC detector is a voltage doubler with a frequency compensation network. The compensation network consists of C27, C28 and R15. The plate sample is less at the higher frequencies than the lower frequencies for the same power output. C28 can be adjusted to compensate for the plate sample and have a flat ACC response for the entire frequency range. Adjustment procedures for the frequency compensation network are given in Section V.

The output of the ACC detector is fed to the Level Control Board 1A9 where it is amplified further and then applied to the exciter to control the AM power level.

4.4.3 LOADING COMPARATOR PLATE SAMPLE DETECTOR

The plate sample for the loading comparator is detected by CR2 and filtered by C13, R3 and C40. L2 provides a DC return for diode CR2, R4 is adjustable and provides the drive for the front panel meter when monitoring Plate Peak RF volts. Adjustment procedure for R4 is in Section V.

4.4.4 LOADING COMPARATOR GRID SAMPLE DETECTOR

R17, C29 and R16 provide frequency com-

pensation for loading comparator grid sample. Because the plate RF sample drops at the higher frequencies, the grid sample must also be forced to decay at the higher frequencies in order to have the loading consistent over the frequency range. Diode CR1 rectifies the grid sample and DC is filtered by C12, R1 and C31. Zener diode CR11 limits the peak grid sample to -3.0 VDC. R2 is adjustable and provides the drive to the front panel meter when monitoring Peak RF Grid Voltage. Adjustment procedures for C29 and R2 are in Section V.

4.5 ALR BOARD 1A13

Refer to Figure 5-31.

4.5.1 GENERAL

The Automatic Level Recognition Board contains circuits for controlling the RF output power level (ALC), reduction of the RF output power during low AC line conditions and Tune Fault indication during off resonance operations.

4.5.2 AUTOMATIC LEVEL CONTROL (ALC)

The ALC circuitry consists of CR1, Q2 thru Q6, R18, R21, R22, SCR Q1 and associated components. Automatic Level Control starts with a sample DCV of the forward output power from the RF Wattmeter 1A4. The DCV sample comes in on J1-7 and is fed to the collector of Q3 across R21, the NORM LINE adjust used to set the level on Q5. In the normal line condition, Q3 is on placing the end of R21 at ground. As the sample DCV increases, the voltage to the gate of Q5 increases, and it begins to turn on. With Q5 on, forward bias is applied to the base of Q6. As Q6 conducts, a portion of the +28V on its emitter is fed out to J1-5, ALC OUT, turning back the exciter drive.

If an extremely high DCV sample comes in, as it would with an open transmission line, the ALC is unable to turn the exciter completely off. With the drive power so low, the VSWR trip cannot function, possibly causing damage to the LPA. To prevent this, CR1 and Q4 are used. If the sample from the 1A4 Wattmeter exceeds 8.2V, CR1 will conduct turning Q4 on. With Q4 on, ground is applied to the gate of Q5 turning it and Q6 off allowing no ALC out. The exciter can now drive the KW at maximum allowing the VSWR trip circuit to react.

4.5.3 KEYLINE COMPARATOR

This circuit consists of U1B, R5, R6, R12 and associated components. The output of U1B pin 1 will be a high when the keyline pin J1-3 is 7 VDC or below and will be applied to SCR Q1 as anode voltage.

The +24 VDC regulated is applied across R5, R6 to set a reference voltage of +7.2V applied to pin 7 of U1B. When the keyline voltage goes below the reference on pin 7, U1B will trip. The output on pin 1 of U1B will go high. The voltage through R12 will now be applied to the anode of Q1.

4.5.4 LINE VOLTAGE COMPARATOR

This circuit consists of C36, R1, R3, R4, R9, R11, R13, R14, U1A and associated components. The Line Voltage Comparator prevents output fluctuations due to changes in the AC line voltage during transmit. It monitors the unregulated +35 VDC entering at J1-4 coming from PS-1900A which is proportional to the AC line voltage.

The +35 VDC is fed across a voltage divider R1, R3 and applied to pin 4 of U1A. The +24 regulated is applied across R4 which sets a reference voltage for pin 5 of U1A. R9 provides positive feedback for quick reaction time to U1A.

As the line voltage drops, the level on pin 4 falls below the reference on pin 5 causing U1A to trip. The normally low output at pin 2 is now a high. R11 will

drive R13, R14, a voltage divider and current limiter, to turn on the gate of Q1. The time constant of R14, R36 holds for 500 ms, verifying an actual low line condition.

This gate voltage from the Line Voltage Comparator and the anode voltage from the Keyline Comparator cause Q1 to conduct turning on transistor Q2. When Q2 conducts it brings R18 to ground eliminating the base bias of Q3 turning it off. With Q3 off, R22 the LOW LINE ALC adjust, is added in series with R21 the NORM LINE adjust. This voltage divider network will increase the amount of wattmeter sample voltage felt on Q5. With more voltage on Q5 the ALC voltage on J1-5 will increase, reducing forward output power to 700 watts. This condition will exist regardless of the AC line voltage condition until the keyline is released, resetting Q1.

4.5.5 KW TUNE COMPARATOR

The KW Tune Comparator contains components R69, R70, U3B, Q12 and associated circuitry. This circuit compensates for extremely long control cables. The KW Tune ground comes in from the exciter's front panel on J2-3. R69 and R70 set a reference voltage of 3.6 VDC on pin 7 of U3B. When the KW Tune line VDC on pin 6, falls below the reference on pin 7 the output of U3B on pin 1 goes high. The high is applied to Q12 turning it on. With Q12 on, a hard ground is placed on the KW Tune line on J2-4. By applying this ground, there will be no significant changes of the KW Tune input by the high resistance of long control cables.

4.5.6 PLATE COMPARATOR

The Plate Comparator consists of U2A and Q7. In a normal condition, the power amplifier V1 is at resonance with proportional amounts of plate DC current and Plate peak RF voltage. The input at J2-9 would be low. In an off resonance condition, the input at J2-9 is a high, +20 VDC. This high is fed to pin 3 of U2A. U2A is a non-inverting buffer. The high out at pin 1 turns on Q7.

4.5.7 DRIVE POWER COMPARATOR

U2B, U2C, R49, R50, Q10 and associated components make up the Drive Power Comparator. The comparator takes a look at the amount of drive on the grid of V1. The negative DCV grid sample is fed in on J2-7 from the RF Sensor Board 1A7. The negative DCV is fed to U3C pin 9. The reference voltage on pin 8 of U3C is developed from the +24 VDC regulated source which is fed across R49, R50. The reference of +2.7 VDC represents approximately 40 watts of drive power. When the DCV on pin 9 goes higher than the DCV on pin 8 indicating greater than 40 watts, the output of U3C on pin 14 goes high. This high turns on Q10. U2B is a buffer amplifier used to isolate the meter from the grid sample so changes in the meter will not change the grid sample.

4.5.8 TUNE FAULT LAMP CIRCUITRY

U3D, R51, R55, R57, R48, R67, SCR Q9, Q11, CR3 and associated components make up the Tune Fault Lamp circuit. With Q7 turned on by the Plate Comparator, the conditions for a Tune Fault are present.

U3D is an AND gate. A 11.5 reference voltage for pin 11 is set by R51 and R55. +24 VDC is fed across R57 with Q7 and Q10 on, R48 and R67 are placed in series with R57. This places a voltage of less than +12 VDC on pin 10 of U3D causing a high output on pin 13.

With U3D's output high, a positive gate voltage for Q9 is provided turning it on, since the anode has +24 VDC already applied for the necessary second voltage. With Q9 on, Q11 is now on which will open the keyline relay on J2-2 unkeying the exciter and turning on the Tune Fault Lamp. This condition exists when the transmitter has moved off frequency in

large increments (greater than 1 MHz), the reaction time is instant.

As the keyline collapses the outputs of the Drive Power and Plate Comparators go low turning off Q7 and Q10. Q9 will not go off even with its gate removed, due to the +24 VDC remaining on its anode. The Tune Fault Lamp will remain on until Q9 is turned off either by turning off the KW completely or retuning the KW which removes the +24 VDC from Q9's anode through diode CR3, as discussed in the KW Tune Comparator.

4.5.9 IB COMPARATOR

The IB Comparator consists of C23, Q8, R37, R38, R46, U2D, U3A, U4 and associated circuitry. To avoid over dissipation of the power amplifier tube, the IB Comparator is used. If the DC plate current and plate peak RF voltage are proportional but the impedance is wrong, the Plate Comparator U2A would not react but the IB Comparator will since it measures absolute DC plate current.

The current sample is taken from the plate metering resistor and brought in on J2-5 and 6, and fed to U2D. U2D is a precision differential amplifier with a multiplication factor of 10. (Example: 500 milliamperes of plate current, five tenths of a volt, multiplied by 10 equals 5 volts out at pin 8.) The output at pin 8 is fed to U3A pin 4. A reference voltage of 8.2V has been set for pin 5 by R37, R38 when pin 4 goes higher than pin 5 (820 milliamperes, 8.2V) the output at pin 2 goes low turning off Q8.

This circuit is so designed as to have a time constant so as not to turn off the exciter as soon as the KW is keyed due to excessive plate current which occurs the instant keying takes place. The circuit is configured to keep Q8 on at all times when the KW is not keyed. Q8 clamps U4's timing capacitor C23 to ground while the voltage on pins 2 and 8 try to charge C23 through R46.

When Q8 is turned off by U3A, C23 will charge up through R46. If the condition is an authentic one, the low on U3A is there longer than the time constant. U4 will put a low on pin 6 which is then applied to pin 10 of U3D, taking the place of Q7's output, turning on Q9 as discussed before, turning on the Tune Fault Lamp.

4.6 REGULATOR BOARD 1A5

Refer to Figure 5-25.

Figure 5-25 is a schematic diagram of the Regulator Board. This board contains the following major circuits: +12 VDC regulator, -12 VDC regulator, forward power amplifier, reflected power amplifier, DC O/L circuit, and VSWR trip circuit. Each circuit will be covered in the following paragraphs.

4.6.1 +12 VDC REGULATOR

Several operational amplifiers are used in the GSL-1900A and all require a +12 VDC source. The +12 VDC is produced by dropping the +24 VDC through R41 and regulating to +12VDC in VR2. R41 reduces the dissipation of VR2 to safe limits. C2 is a filter capacitor and C14 is an RF bypass.

4.6.2 -12 VDC REGULATOR

The 24 volts AC to drive diodes CR1, CR2, CR3 and CR4 is supplied by transformer 1A10T1, located in the grid plenum. The negative output from CR2 and CR4 is fed to the -12 VDC regulator VR3, through R1 and R42. C3 is a filter capacitor while Zener diode CR10 is a pre-regulator for VR3. R1 and R42 reduce the dissipation of VR3 to safe limits. C15, C16 and C18 are RF bypasses.

4.6.3 FORWARD POWER AMPLIFIER

The forward power amplifier accepts the output from the wattmeter and is amplified to perform several functions. The

DC amplifier consists of U1 and associated components. The forward power output from the Wattmeter 1A4 is fed to pin 5 of the Regulator Board and through R10 to the input of U1. R38 and R4 provide the drive for the front panel meter when monitoring forward power. The adjustment procedure for R4 is in Section V. R16 divides down the output from the wattmeter to prevent overdriving U1. C13 is an RF bypass.

R3 and R12 are used to adjust the offset at the output of U1, pin 10. When there is no input to U1, R3 can be adjusted to produce zero output from the operational amplifier. R11, C4 and C5 are AC feedback components and are used to prevent the amplifier from oscillating. The DC gain of U1 is controlled by negative feedback through R13, R14 and R15. The DC output of U1 is fed to R7 and R8. The output from R8 is fed to the RF Prove Circuit on the Tune Control Board 1A6. This output will cause the RF Prove relay to be energized when the forward power has reached approximately 200 watts. The output from R7 is used to drive the meter in the remote control head, located in the exciter front panel.

4.6.4 REFLECTED POWER AMPLIFIER

The operation of the reflected power amplifier is similar to that of the forward power amplifier. The reflected power output from the wattmeter is fed to pin 18 and is divided down through R21 and R22 prior to being fed to the input of U2. R25 is an adjustment for the reflected meter drive. R2 and R17 are used to adjust the offset for U2 to zero volts when the input reflected power input is zero. C12 is an RF bypass while C6, C7 and R20 are AC feedback components for stability of U2.

R18, R19 and R23 are negative feedback resistors and determine the gain of the amplifier. R6 is an adjustment used to control the remote meter when the switch in the control head is in the reflected power position. C27 is an RF bypass.

4.6.5 VSWR TRIP CIRCUIT

The VSWR Trip Circuit consists of U3, Q1, K1 and associated components. U3 is a dual comparator and has a slightly negative voltage on pin 10 when there is no output from the reflected power amplifier, U2. R28 and VR4 are used to supply the required negative 6 VDC for U3 and U4. The positive bias developed across R26 is applied to pin 6 of U3. Since pin 5 is returned to ground by R27, pin 10 will be negative when there is no reflected power input on pin 3. C11, C20, C21 and C26 are RF bypasses to prevent RF from upsetting the operation of the IC. Q1 will remain cutoff and relay K1 will be de-energized because of the bias supplied by R29 and R30.

The VSWR trip level is adjusted by R9 in series with R24. This level is adjusted to provide a positive bias on pin 2 of U3. The reflected power output from U2 (divided down by R25 and R31) is applied to pin 3 of U3. When the voltage on pin 3 exceeds the voltage on pin 2, pin 10 of U3 will increase and drive Q1, causing K1 to energize. K1 is connected as a latch (pin 6 of K1 is ground). The keyline is opened and the VSWR trip lights are illuminated when K1 is energized. It should be noted that R30 and C24 form a small time delay to prevent short duration VSWR indications from causing VSWR trips. Diode CR6 clamps the voltage spike when relay K1 falls out.

Once the VSWR Trip Circuit has energized K1, the fault must be cleared by depressing the "Plate OFF" switch on the front panel of the LPA or on the remote control panel. When the "Plate OFF" switch is depressed, the +24V Plate SW voltage is removed from pin 7 and relay K1 will de-energize. Adjustment of R9, the VSWR Trip Level, is covered in Section V.

4.6.6 DC OVERLOAD CIRCUIT (DC O/L)

The operation of the DC O/L Circuit is nearly identical to the VSWR Trip Circuit. Q2 is cut off by the bias supplied

by R32 and R33. R36 and R34 cause a negative output on pin 10 of U4 when there is no DC O/L input to pin 4 of the Regulator Board. C9, C22, C23 and C25 are RF bypasses. R39 and R35 supply the positive threshold voltage for pin 2 of U4. R35 is the DC O/L trip adjustment. The DC O/L drive is applied to pin 3 of U4 through R37. When the drive on pin 3 becomes larger than the voltage on pin 2, Q2 conducts and relay K2 is energized. R32 and C17 prevent short duration DC O/L pulses from triggering K2. Relay K2 is connected as a latch, pin 6 is ground. When K2 energizes, the DC O/L lamp is illuminated and the DC O/L control line is opened (PC connectors pins B and C). The DC O/L control line is the interlock line and causes the PL SW +24 volts to be removed from the LPA and the plate contactor falls out, removing the high voltage.

When 1A5K2 is energized (see Figure 4-11), the +24 VDC is removed from the plate contactor and PL SW +24 VDC is removed. 1A5K2 receives its +24 VDC from the plate off switch. In order to clear the DC O/L fault, the "Plate OFF" switch must be depressed. This removes the +24 VDC from K2 and the relay will de-energize. CR5 is used to clamp the turn off spike when relay K2 is de-energized.

The operation of the DC O/L is further discussed in section 4.11 and Figure 4-12.

4.7 TUNE CONTROL BOARD 1A6

Refer to Figure 5-26.

The Tune Control Board is shown schematically in Figure 5-26. It consists of the filament timer circuit, tune fault timer, keyline interrupt, RF prove circuit, and the exclusive ready circuit. Each of these circuits will be described in the following paragraphs.

4.7.1 FILAMENT TIMER CIRCUIT

The Filament Timer Circuit consists of U2, K3 and associated components. When the filaments are initially turned on, +24 VDC FIL SW is applied to pin 12 and to U2 pin 5. C2 is charged slowly through R4 and relay K3 remains de-energized. After approximately 3 minutes, a ground appears on pins 1 and 6 of U2 and K3 is energized via CR4. Once K3 is energized it latches because pin 9 is ground. R5 is a bias resistor for U2 while CR5 clamps the voltage spike generated when K3 is de-energized. The plate contactor cannot be turned on until K3 is energized because the interlock line (I/L) is interrupted through K3 contacts 6 and 7.

4.7.2 TUNE FAULT TIMER

The major components of the tune fault timer are U1, K1 and Q3. When a tune cycle is initiated in the remote control unit (located in the front panel of the exciter), a ground is placed on pin M of 1A6J1. This ground, through CR7, reduces the base voltage of Q3 through the base bias circuit, R10 and R11. Q3 conducts and +24 VDC appears across R9 on pins 5 and 6 of U1. C9 and C10 are RF bypasses. When +24 VDC is applied to pins 5 and 6 of U1, relay K1 is energized and will remain energized until the time constant R1, R2 and C1 is charged up to a preset threshold. At this time relay K1 will de-energize. R2 is adjustable and is normally set to approximately 3 seconds if the GSL-1900A is used without the antenna coupler. If the GCU-1935 is used, R2 is adjusted to approximately 10 seconds. R18 and CR13 are used to terminate the tune cycle timer when the SCR on the Level Control Board fires. (This will occur when there is a malfunction in the tune cycle.) C4 and C12 are RF bypasses while CR1 is a spike suppression diode.

4.7.2.1 Relay K1 Functions

a) Contacts 5, 6 and 7: Pin 6 is ground and grounds out the input to the RF prove amplifier when not in a tune cycle. Pin 7, when K1 is energized, provides a ground on the coarse key-

line until the RF prove relay energizes. (The coarse keyline ground initiates the pre-position timer on 1A11.)

b) Contacts 8, 9 and 10: Control the fault lamp. If, when K1 de-energizes, K2 is not energized, the fault lamp will be illuminated.

c) Contact 11: Recycles U1 with each tune command by discharging C1 to ground.

d) Contacts 12 and 13: When K1 is energized the tuning lamp will be illuminated.

e) Contacts 14, 15 and 16: When K1 is energized the LPA enable line is connected to the coupler sum line.

4.7.3 KEYLINE INTERRUPT CIRCUIT

This circuit is composed of Q2, K4 and associated components. The keyline must be opened during portions of the tune cycle. For example, when the LPA is being pre-positioned and the antenna coupler elements are being forced to the home positions, the transmitter should not be keyed on. When Q2 is conducting (saturated), relay K4 is energized and the keyline is opened by relay K4 pins 5 and 6. CR10 allows Q2 to be turned on only when there is a ground on the KW Tune line. CR11 prevents the keyline from being interrupted after the RF prove relay K2 has energized. Diode CR9 interrupts the keyline (unkeys the transmitter) when the ready lamp comes on at the end of the tune cycle. Resistive divider R8 and R7 is driven from the coupler sum line and saturates Q2 until the coupler elements are in the home position. C5, C6, C13, C14 and C15 are RF bypasses. CR8 is a clamp diode while R6 is the ground return for Q2 emitter.

4.7.4 RF PROVE CIRCUIT

The RF Prove Circuit consists of Q1, K2 and associated components. It is driven by the forward power amplifier on the Regulator Board. When, during the LPA tune cycle, the output from the wattmeter indicates a forward power of 200 watts, Q1 is saturated and relay K2 energizes. This "proves" that the plate has tuned. The RF prove output from the Regulator Board drives through R16 and R3 to the base of Q1. C8 is a filter capacitor to prevent the RF prove output from saturating Q1. C16 is an RF bypass while CR2 is a spike suppressor diode. When K2 is energized, it will latch through R15 provided there is an output from the exclusive ready circuit.

4.7.4.1 K2 Relay Functions

a) Contacts 5, 6 and 7: Pin 6 is at ground potential and provides a ground for the coupler tune line when K2 is energized. (The antenna coupler can tune after the RF prove relay is energized.) When K2 is de-energized, pin 6 contacts pin 5 and a ground is placed on the lag network keyline.

b) Contacts 8, 9 and 10: When K2 is energized, the ground is removed from the coarse keyline. (The coarse keyline starts the pre-position timer on the Pre-Position Board.)

c) Contacts 11, 12 and 13: When K2 is energized, and if there is an output from the exclusive ready circuit, K2 will latch.

d) Contacts 14, 15 and 16: These contacts determine whether the fault or the ready lamp will be on at the end of the tune cycle. If K2 is energized at the end of the tune cycle, the ready lamp will be on. If K2 is not energized, then the fault lamp will be on.

4.7.5 EXCLUSIVE READY CIRCUIT

The Exclusive Ready Circuit uses Q4, Q5 and associated components. The purpose of the Exclusive Ready Circuit is to assure that the ready lamp will come on only if the RF prove relay is energized

when the tune fault timer expires. Sometimes the RF prove relay will energize at the beginning of a tune cycle and then de-energize before the end of the tune cycle. When this condition occurs, the fault lamp will come on. Transistor Q4 is driven by R12 and is saturated during the tune fault timer interval. At the end of the fault timer interval the collector of Q4 rises and drives the base of Q5 from R13. If K2 is energized, transistor Q1 will be driven from the emitter of Q5 and the ready lamp will be on.

4.8 LEVEL CONTROL BOARD 1A9

Refer to Figures 5-28, 4-7 and 4-8.

Figure 5-28 is a schematic diagram of the Level Control Board. Figures 4-7 and 4-8 are simplified schematics illustrating the loading lockout and the ADL (Automatic Dissipation Limiter). The board contains the following basic circuits: ACC control, ACC amplifier, loading lockout timer, loading lockout relay and control, plate comparator, ADL circuit and loading adjustment. Each of these circuits is discussed in the following paragraphs.

4.8.1 ACC CONTROLS

The output from the ACC Detector (1A7C7, feed-thru capacitor) is fed to pin H of the Level Control Board. The ACC control circuit consists of Q1, R1, R2 and associated components. The purpose of the ACC control circuit is to provide more ACC voltage during the tune cycle in order to decrease the AM tune power from nominal AM of 350 watts to approximately 200 watts. Transistor Q1 is cut-off during the tune cycle by diode CR2 because a ground is provided on 1A9J1 pin J. Because Q1 is cut-off, more ACC voltage will appear at the junction of R6 and R45. This point is the input to the ACC amplifier. R1 and R2 function as a variable voltage divider across the ACC detector output. When Q1 is saturated (not during the tune cycle) less voltage appears at the input to the ACC amplifier. (When Q1 is saturated, R2 is shorted out.) The adjustment of R1 and R2 is in Section V.

R4 supplies turn on bias for Q1 through VR2 when not in the tune cycle. R3 keeps Q1 cut-off while C1 and C8 are RF bypasses.

4.8.1.1 ACC Limiting

R60, R61, CR10, Q8, Q9 and associated components form the ACC Limiting circuit. During the tune cycle, when the comparator output (U1B-4) is high, transistor Q9 is saturated and no ACC voltage is supplied to the ACC amplifier. Q8 is cut-off during the tune cycle by the KW Tune line being at ground. The comparator output, through R61, R60 and CR10, supplies a fixed input to the ACC amplifier to reduce the output from the exciter during the capacitor sweep mode. As soon as the comparator output drops to zero (indicating that the plate has tuned), Q9 is cut-off and Q8 is saturated. This action removes the ACC limiting voltage (comparator output) and allows the normal ACC input (pin H) to drive the ACC amplifier. This action is required to prevent driving the tube too hard during the capacitor sweep mode of the pre-position cycle.

4.8.2 ACC AMPLIFIER

The ACC Amplifier consists of U1C, U1D, Q3 and associated components. The ACC detector output, after being attenuated by the ACC controls is fed to U1C pin 13. The positive going ACC detector DC is amplified in U1C (non-inverting), and further amplified in U1D (inverting). The output from U1D is fed to Q3 base through R38. R30, R31 and R35 are bias resistors. R36 is a negative feedback resistor while R37 couples the output of U1C to the input of U1D. R43 and R44 supply the proper bias to pin 12 of U1D. The input to Q3 is inverted to the collector so that a positive going input on pin 13 of U1C will cause a positive

going output on 1A9 pin N, the ACC output. This output is fed back to the exciter to control the AM level. U1D has negative feedback supplied from the emitter of Q3 through the voltage divider R41 and R42. R40 provides negative feedback for Q3 while R39 is the base return. ~~R19 is the collector load while R39 is the base return.~~ R19 is the collector load for Q3 while R18 isolates the collector of Q3 from the ACC output. See Figure 5-22 Sheet 1. A filter network, called a "lag network" is connected across the ACC line. The purpose of this network is to eliminate loop oscillations on the ACC line. The network consists of chassis mounted components R17, R18, C54 and C11. The network is physically located adjacent to J5 on the rear panel of the LPA. C11 is an RF bypass.

4.8.3 LOADING ADJUSTMENT

R21 is the adjustment positioning the loading inductor to the proper position. The negative grid sample and the positive plate sample are added together in R21 and R25 and the output TP1 is fed to the load servo amplifier. As discussed previously, the loading is not allowed to be driven from this error voltage until after the plate has tuned. The loading lockout relay circuit K1 prevents this from occurring.

4.8.4 LOADING LOCKOUT RELAY AND CONTROL

The loading lockout relay K1, when energized, prevents the grid-plate sample output from driving the loading servo. Transistor Q4 energizes K1 and it is driven from R24 and CR6 from the proximity switch. The proximity switch is mounted on the plate tuning servo motor and effectively chops a DC voltage supplied through R22 and generates a series of DC pulses while the plate is tuning and the plate tuning servo motor is rotating. These DC pulses are fed through C5 and CR6 and charge C6 to provide a DC drive voltage for Q4. R23 is the ground return for differentiating capacitor C5 while R59 is the base ground return for Q4. Q4 is also saturated by R55 through CR4 even if the plate tuning motor is not running. When power is first applied to the LPA, K1 is energized. The drive to the base of Q4 through CR4 remains until the loading lockout timer has been triggered and has expired. CR5 is a clamp diode used for spike prevention.

4.8.4.1 K1 Relay Functions

a) Contacts 5 and 6: When K1 is energized, contacts 5 and 6 are open and the grid-plate sample cannot drive the loading servo.

b) Contacts 8 and 9: When K1 is energized, the +24 volts is removed from the anode of Q2, the ADL SCR. It should be noted that the SCR can have +24 volts supplied through CR7 even if K1 is energized.

4.8.4.2 Loading Lockout Simplified Schematic

Figure 4-7 is a simplified schematic diagram of the loading lockout timer and relay. This schematic illustrates the chopped drive to Q4 and the output of the loading lockout timer.

4.8.5 LOADING LOCKOUT TIMER

U2 shown in Figure 4-7 is the loading lockout timer. As stated previously, the output of the timer on pins 1 and 6 is a positive voltage adequate to saturate Q4 until the timer is triggered. This output voltage is near +8 VDC. When the timer is triggered by a ground on 1A9J1 pin J, CR3 and R56 cause the voltage on the base of Q7 to drop and the timer is turned on by +24 volts being applied to pin 5. R57 keeps Q7 cutoff when there is no ground on 1A9J1 pin J. R58 is the collector load for Q7. Approximately 1.5 seconds after U2 has +24 volts applied to pin 5, pin 1 will short out the junction of R55 and CR4. This action is illustrated by the waveshape shown. The period of the timer is determined by the

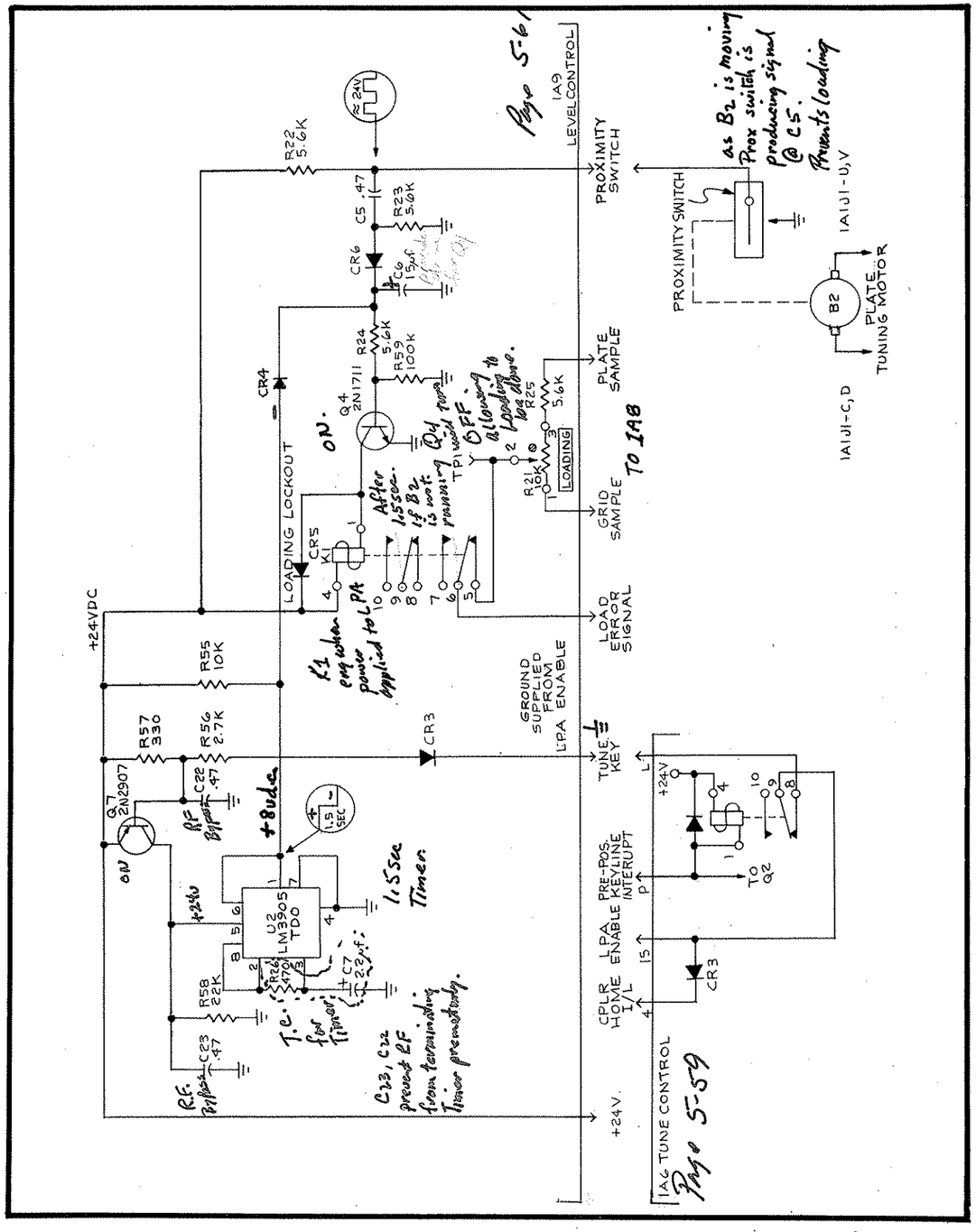

FIGURE 4-7 LOADING LOCKOUT, SIMPLIFIED GSL-1900A TP 4-7

time constant R26 and C7. C22 and C23 are RF bypasses to prevent RF from terminating the timer prematurely.

4.8.6 PLATE COMPARATOR

The plate comparator uses U1A and U1B and associated components to produce a +23 VDC output when the power amplifier tube plate current is excessive for a particular power output. This circuit is used in conjunction with the ADL circuit to prevent damaging the tube. The plate comparator output is also used with the Pre-Position Board, the Tune Control Board and the ALR Board. A simplified schematic of the plate comparator is shown in Figure 4-8. The plate comparator compares a voltage sample derived from the plate current and a voltage sample derived from the power output. The plate current sample is obtained from 1A3R6 located on the front panel of the LPA. The RF power sample comes from the plate sample detector located on the RF Sensor Board in the plenum.

4.8.6.1 Sample Comparison

The plate current sample fed to U1A via R12 and R13 where it is amplified and fed to U1B for comparison with the RF voltage sample. R15 is a negative feedback resistor and R17 couples U1A output to U1B input. The RF power sample is fed through R5, CR8 and R16 to the input of U1B. R5 is adjustable and is used to set the value of the RF power sample to the correct value for a given tube plate sample. When the RF power output is adequate for the value of tube plate current, pin 4 of U1B will be zero volts. ~~When the RF power output is too low for the value of tube plate current, pin 4 of U1B will be zero volts~~. When the RF power output is too low for the value of tube plate current, pin 4 of U1B will have approximately +23 VDC. This is called an ADL condition and the ADL circuit will terminate the tune fault timer through 1A6CR13 and 1A6R18. In addition 1A9CR9 will force +24 VDC on the ACC line and shut off the tune power from the exciter.

Resistors R7, R8, R10, R11, and R14 are bias resistors for U1A and U1B. C2, C3 and C24 are RF bypasses. The comparator output on pin F is fed to the Pre-Position Board and terminates the capacitor force function when the comparator output drops to zero. The output on pin F is tapped off and sent to the ALR Board 1A13 to be used by the IB comparator, which measures absolute plate DC current.

4.8.7 ADL CIRCUIT

Q2, shown in Figures 4-8 and 5-28, is an SCR that is driven on the gate by the plate comparator output through R34, R33 and VR1. VR1 is a 6 volt zener and the plate comparator output must be larger than 6 volts to fire Q2. C10 is a noise filter to prevent sharp spikes from triggering Q2. R49 assures Q2 will be cutoff when not driven by the plate comparator. The anode voltage for Q2 is supplied from two sources. When K1 is energized, +24 VDC is supplied from the collector of Q5 through CR7. Transistors Q5 and Q6, along with R29, R51, R52, R53 and R54, form a logic circuit that will supply +24 VDC to Q2 when the plate voltage is on and there is a fault lamp. When K1 is de-energized the +24 VDC for Q2 anode is supplied by relay contacts 8 and 9. When Q2 fires, +24 VDC is applied to the ACC line to shut off the exciter drive and the tune timer is terminated, thus ending the tune cycle.

4.9 SERVO CONTROL AMPLIFIERS 1A1 and 1A8

Refer to Figures 4-9 and 5-23.

The schematic diagram of the Servo Control Amplifiers is shown in Figure 5-23 and a simplified schematic of the output bridge is shown in Figure 4-9. The entire amplifier contains a preamplifier, enable circuit, signal inverters, force diodes, and the output power bridge. In addition, many feedback components are used. Each of these functions will be discussed individually.

4.9.1 PREAMPLIFIER

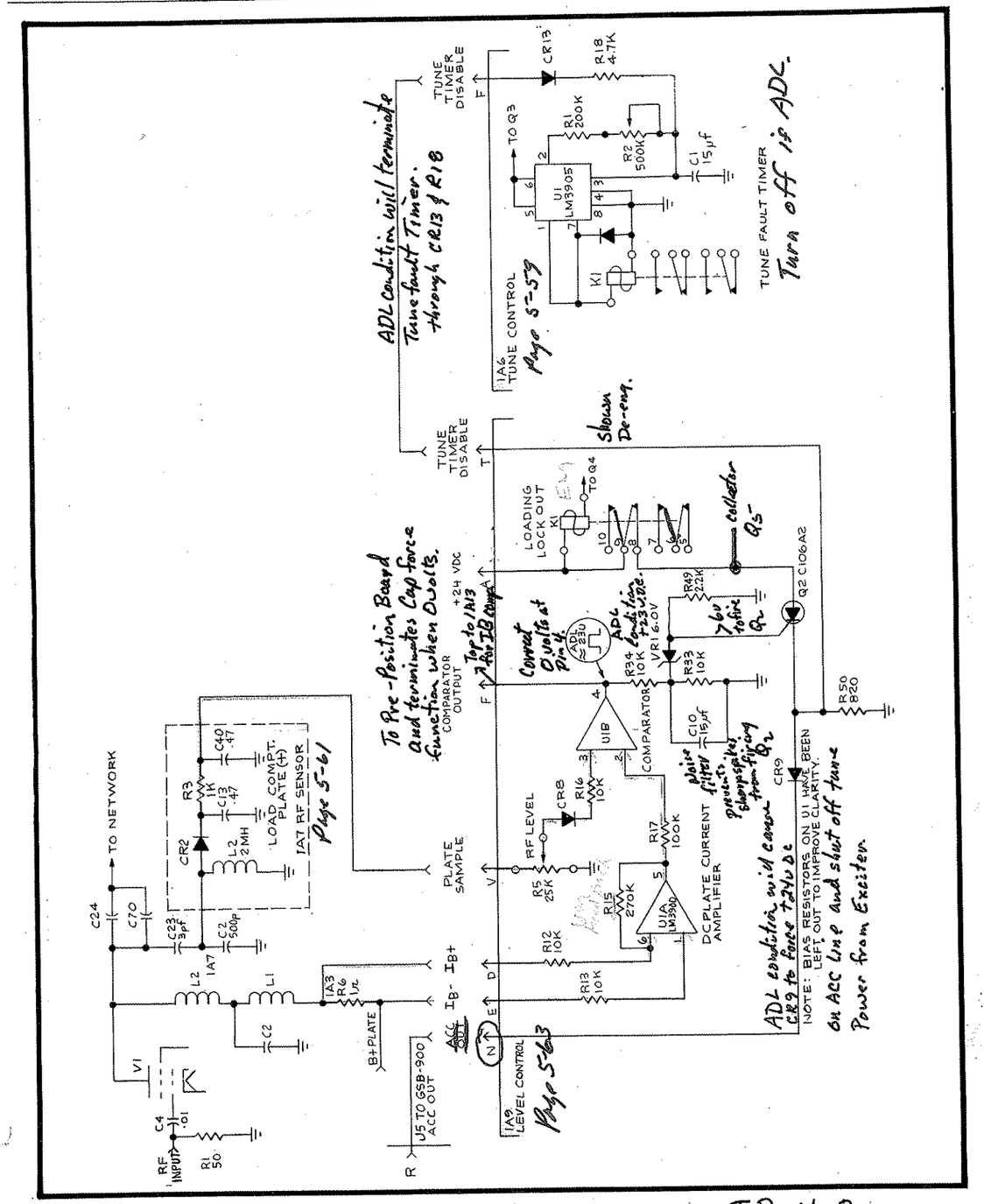

FIGURE 4-8 ADL GSL-1900A SIMPLIFIED TP 4-8

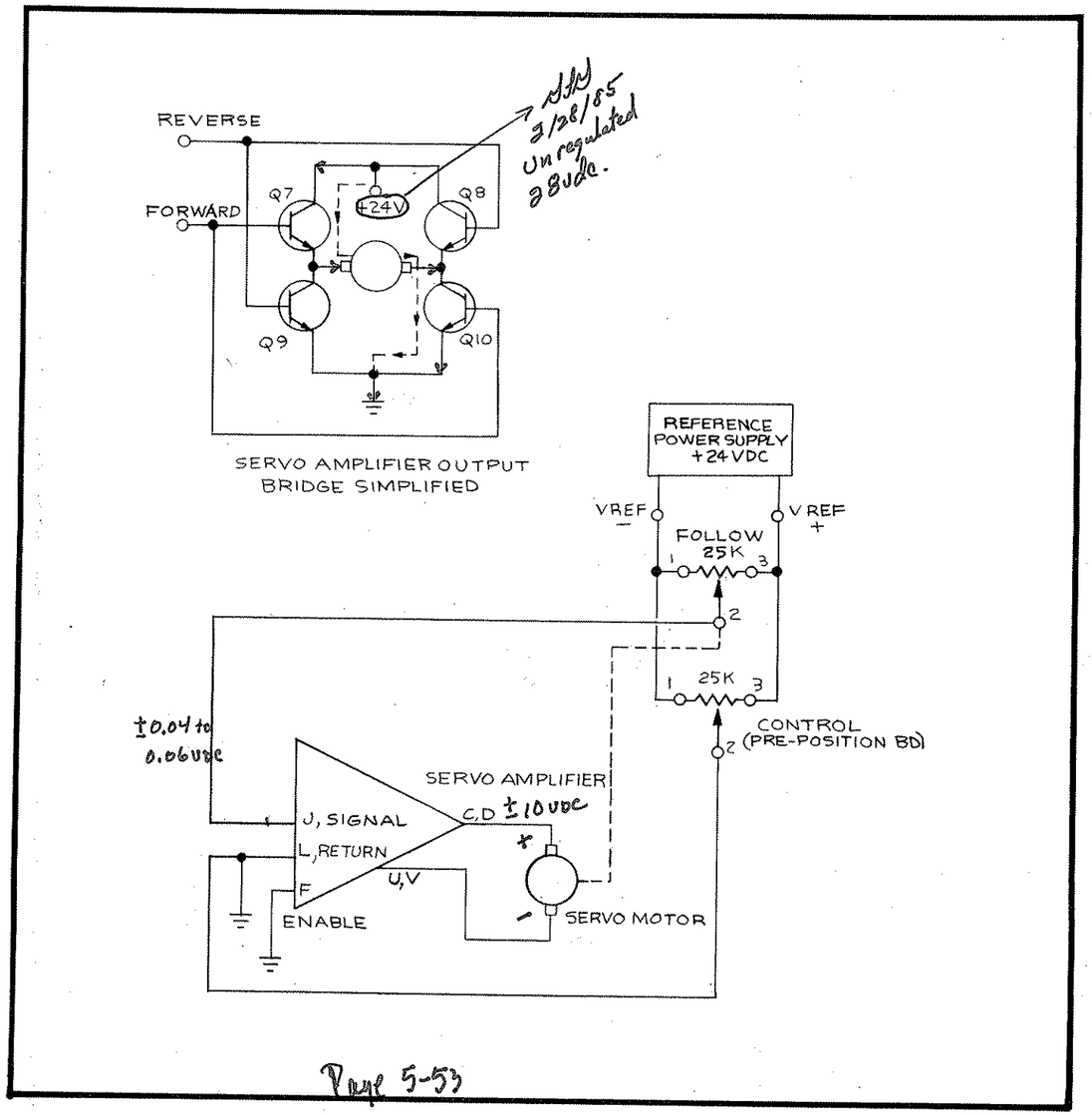

Page 5-53

FIGURE 4-9 CLOSED LOOP SERVO CONTROL SIMPLIFIED TP 4-9

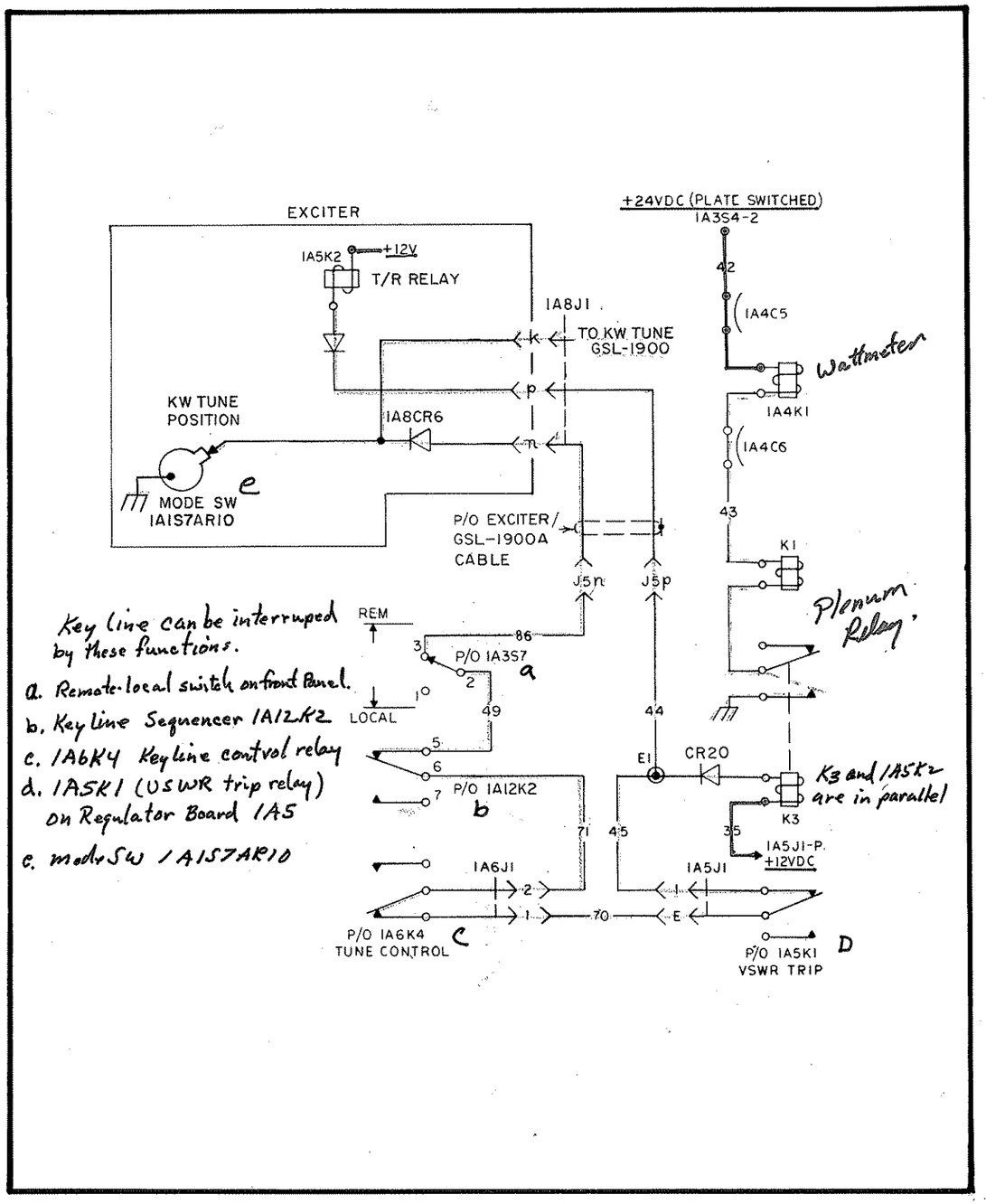

FIGURE 4-10 KEYING CIRCUITS GSL-1900A SIMPLIFIED TP 4-10

the bandswitch motor. Transistor Q1 releases relay K2 after 500 ms through time constant R5, C4, closing the KW tune and keylines.

4.10.3 KEYLINE CONTROL RELAY

Refer to Figure 5-26.

When the keyline control relay 1A6K4 is energized, the keyline is opened and the system cannot transmit. The relay is energized during pre-position (a ground on pin P of 1A6J1); at the end of the tune cycle when the Ready Lamp comes on (CR9); and anytime the coupler sum line is not at ground. 1A6K2 cannot be energized when the mode switch of the exciter is not in the KW Tune position because there is no longer a ground on 1A6J1 pin M.

4.10.4 VSWR TRIP RELAY

Refer to Figure 5-25.

This relay, 1A5K1 on the Regulator Board, opens the keyline when the reflected power output from the wattmeter indicates a VSWR greater than 2.5:1. The keyline is interrupted and the system is unkeyed to protect the power amplifier from excessive high voltages or currents.

4.11 METERING CIRCUITS

The GSL-1900A metering circuits are shown on the simplified schematic of Figure 4-11. A multimeter selector switch 1A3S5, is used to select one of the 8 functions on the test meter, 1A3M1. This meter is on the front panel of the LPA. Each of the eight measured voltages and/or currents is discussed in the following paragraphs. 1A3R6, 1A3R7, 1A3R8 and the meter protection diodes are on a board behind the front panel of the LPA.

4.11.1 GRID PEAK RF VOLTAGE (Position 1)

With the meter switch in this position, the output from the grid VM detector is driving the meter. The grid VM detector is on the RF Sensor Board in the plenum. 1A7R2 provides a calibration adjustment for the peak grid reading. Table 5-6 lists the values of peak voltage for various power levels. If the exciter input were 40.5 watts then 1A7R2 would be adjusted until the meter reads 0.636, which is 63.6 V since full scale deflection is 100 V (1.0 = 100).

4.11.2 PLATE RF PEAK (Position 2)

When the meter switch is in this position, the meter is driven from the plate VM detector located on the RF Sensor Board in the plenum. 1A7R4 is an adjustment provided to calibrate the plate VM sample so the meter reads the peak voltage that exists on the plate of the tube. There is no practical method to actually measure the plate RF voltage. The meter is adjusted to read .575 with a 1,000 watt output. Since full scale of the meter is 4,000 volts, the indicated peak RF voltage corresponding to .575 would be 2300 V peak. This would be approximately 1400 watts on the plate of the tube and the output would be near a kilowatt, considering network losses.

4.11.3 GRID CURRENT (Position 3)

The grid current voltage sample is developed across 1A10R3. Grid current flowing through R3 generates a voltage that drives the meter through 1A3R1. No adjustment is provided for the grid current reading because 1A10R3 is a 1% resistor. Full scale reading of the meter is 10 milliamperes and if the meter reads 0.2, this would correspond to 2 milliamperes.

4.11.4 SCREEN CURRENT (Position 4)

The screen grid of the 4CX1500B is connected directly to ground. Normal screen current flows from the screen grid through 1A3R8, developing a negative voltage to drive the panel meter. If the panel meter, when observing screen current, reverses and goes negative, this is an indication of positive screen current and is caused by improper loading

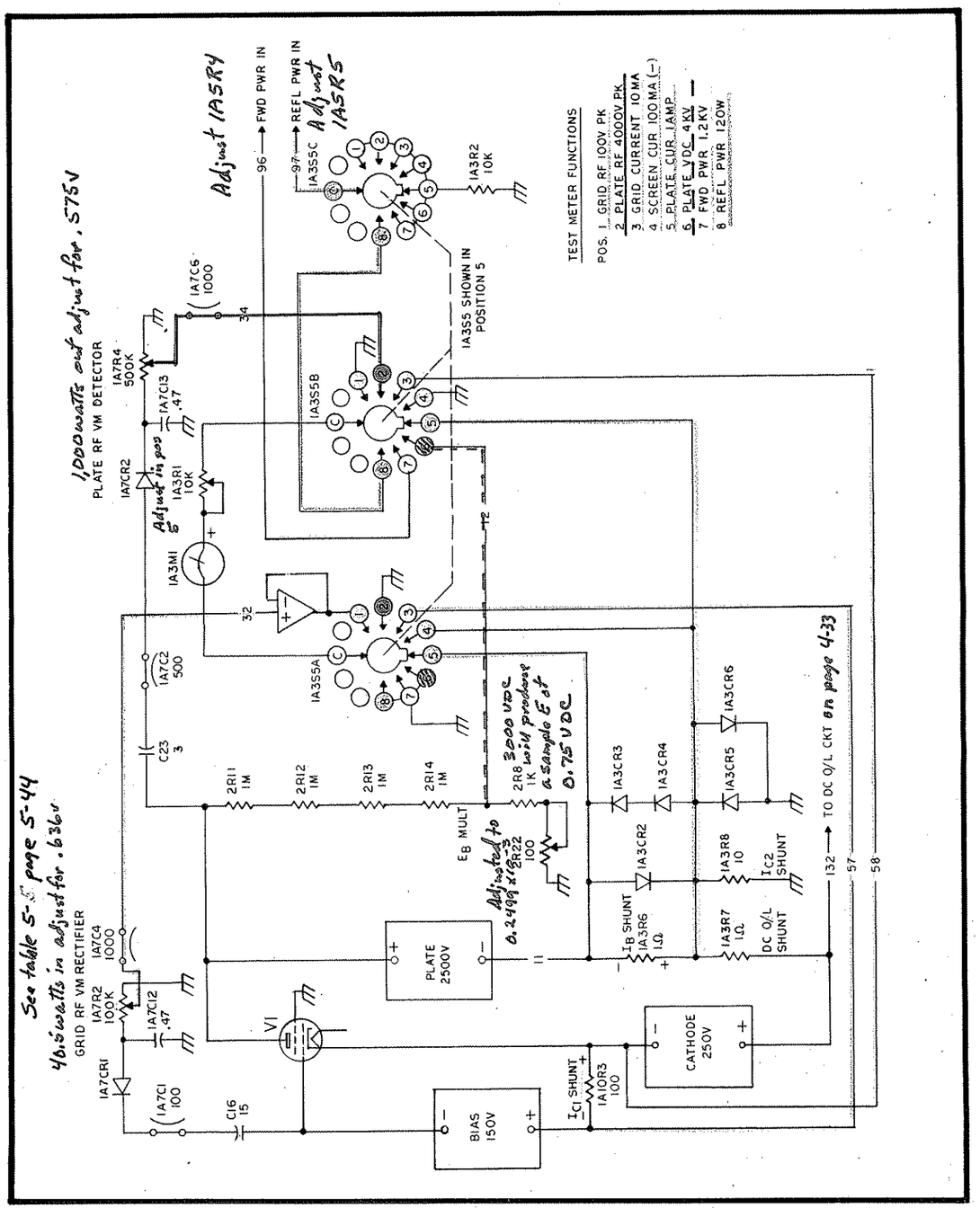

FIGURE 4-11 METERING CIRCUITS GSL-1900A SIMPLIFIED TP 4-11

or mistuning. Operation of the tube in the positive screen grid current region can result in tube damage. A DC overload protection circuit is provided to shut off the high voltage when this occurs for too long a period of time.

4.11.4.1 DC Overload Circuit

Figure 4-12 is a simplified schematic diagram of the DC overload circuit (DC/-OL). The DC/OL drive comes from the end of 1A3R7 that is connected to the cathode supply. This drive voltage is derived from the sum of the voltage developed across 1A3R7 and 1A3R8. The plate current and the screen current flow through 1A3R7 while only the screen current flows through 1A3R8. The table in Figure 4-12 illustrates how the DC/OL will shut off the transmitter with excess plate current or excess positive screen grid current, or a combination of both.

4.11.5 PLATE CURRENT (Position 5)

When the meter selector switch is in this position, the meter and 1A3R1 are connected across 1A3R6. Since 1A3R6 is a one ohm resistor, the voltage developed across it is directly proportional to the plate current in amperes. 1A3R1 is adjusted to produce a meter reading of 0.3 of a 1.0 full scale with 0.3 amperes of plate current. 1A3R1 is provided to compensate for different meter resistances.

4.11.6 PLATE VOLTAGE DC (Position 6)

Refer to Figure 5-32.

The voltage sample for driving the meter in this position comes from the power supply, PS-1900A. Resistors 2R8 and 2R22 are on the high voltage protection assembly. The high voltage, 2200 to 3000 VDC, is divided down in 2R11, 2R12, 2R13, 2R14, 2R8 and 2R22. 2R22 is adjustable and is used to calibrate the voltage sample on terminal B of the HV protection assembly. The sample voltage should be adjusted to be 0.2499×10^{-3}. For example, 3000 VDC would produce a sample voltage of 0.75 VDC when 2R22 is properly adjusted.

4.11.7 FORWARD POWER (Position 7)

Refer to Figure 4-11. It can be seen that the forward power drive for the meter comes from the Regulator Board 1A5. 1A5R4 is used to adjust the forward power reading. Usually, this adjustment is made while delivering 1,000 watts (224 VRMS) into a 50 ohm load and adjusting 1A5R4 until the panel meter reads 1.0 on the 1.2 scale.

4.11.8 REFLECTED POWER (Position 8)

The meter drive for the reflected power comes from the Regulator Board 1A5. 1A5R5 is used to calibrate the panel meter. Usually, the 50 ohm load is removed and the reflected power is adjusted until a wattmeter reads 200 watts reflected. 1A5R5 is then adjusted until the panel meter reads 0.2 on the 1.2 scale.

4.11.9 REMOTE METERING

The extended control unit, 1A2 which mounts in the exciter front panel contains a panel meter 1A2M1. The panel meter also provides a remote forward and reflected power indication when the unit is keyed (transmit). A meter selector switch 1A2S5, is used to select either the forward or the reflected power function. The Regulator Board provides two OP-AMP ICs, 1A5U1 and 1A5U2, for isolation between the local and remote metering circuits. The schematic diagram of the remote control unit is shown in Figure 5-24.

4.12 POWER CONTROL CIRCUITS

The purpose of the power control circuits is to apply primary power to the blower motor and to the internal power supply circuits in the proper sequence. The power control circuits include a DC overload protection circuit which removes primary power from the plate and screen supplies in case of an overload. The

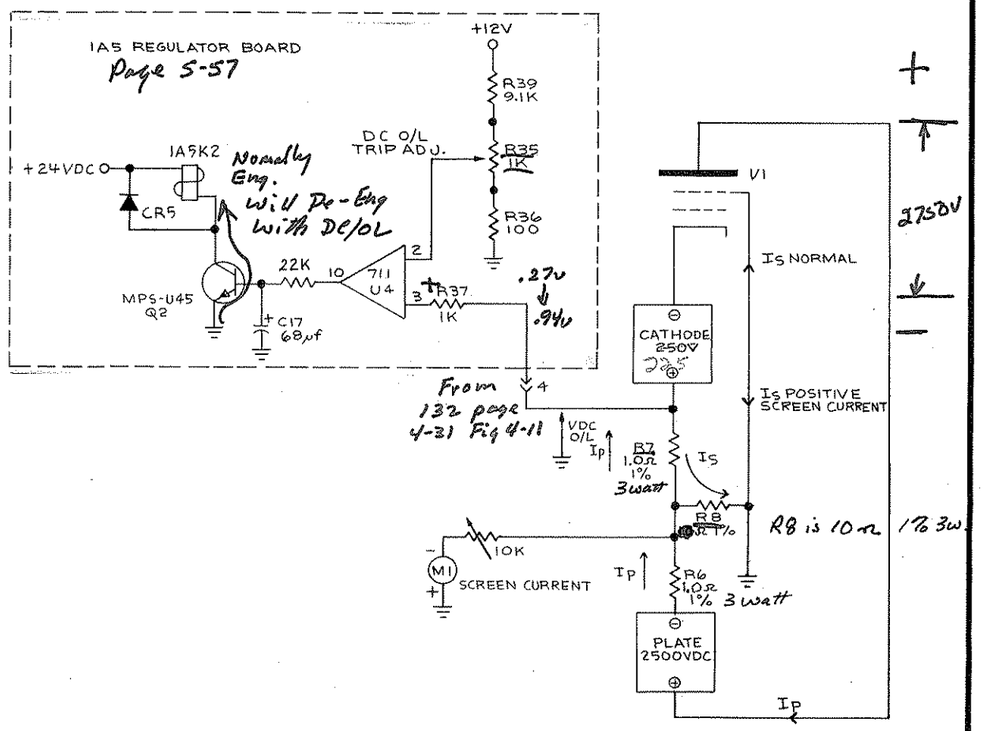

Ip	Is	Ip+Is	$V_{R7}=R7(Ip+Is)$	$V_{R8}=10 \times Is$	V_{DC} O/L	CONDITION
.6A	-.03	+.57	+.57	-.3V	+.27	NORMAL
.9A	-.03	+.87	+.87	-.3V	+.57	NORMAL
1.0A	-.03	+.97	+.97	-.3V	+.94	NORMAL
.6A	+.04	+.64	+.64	+.4V	+1.04	DC O/L SCREEN I+
1.5A	-.03	+1.47	+1.47	-3V	+1.37	DC O/L PLATE I EXCESS

FIGURE 4-12 DC OVERLOAD SIMPLIFIED TP 4-12

power control circuits rely on continuity through the PA interlock circuit to safeguard maintenance personnel engaged in servicing or testing the equipment.

The power control circuits are shown in functional form on the simplified schematic of Figure 4-13. All of the control relays and contactors in the GSL-1900A are 12 or 24 volts DC. The two main advantages of this approach are operator safety and freedom from AC supply voltage frequency effects. A momentary primary power interruption will not drop out the DC control system.

4.12.1 POWER CONTROL SEQUENCE

The GSL-1900A control system uses the 28 volt DC power from the exciter to turn on its internal 24 volt DC supply. Pressing "Filament On" switches, 1A2S2 (remote) or 1A3S2 (local), engages the 28 volt supply momentarily to facilitate initial start up. Holding contacts on the filament contactor, 2K2, provide latch up. The contactor, 2K2, applies primary power to the blower motors, filament voltage supply, and all low voltage power supplies. The application of control voltage to contactor 2K2, also energizes the filament pilot lamps and starts the 3 minute plate voltage delay timer, 1A6U2. The timer's associated control relay, 1A6K3, interlocks the "plate on" function until the power amplifier tube filaments have reached operating temperature. In addition to 1A6K3, the application of plate voltage is also controlled by the RF cover interlock switch, S3, the Hi-temperature switch (100°C), S5, DC overload relay, 1A5K2, and the power supply cover switch, 2S2.

When the 3 minute time period has elapsed, the "Plate Ready" pilot lamp will be lighted provided all covers are in place and a temperature or DC overload has not occurred. Pressing the "Plate On" switch will close the plate and screen contactor, 2K1, which will latch in through the auxiliary contacts.

4.12.2 DC/OL TRIP

The DC overload circuit is adjusted to trip at 40 milliamperes of positive screen current or also excessive plate current.

4.12.3 THERMAL OVERLOAD

The power amplifier tube is protected against damage from high plate dissipation which might occur under some conditions of mistuning. Since normal plate dissipation under continuous keydown service (FSK), is a nominal 900 watts, and the 4CX1500B has a maximum rating of 1500 watts, a relatively slow trip period can be tolerated. The thermostat is located near the top of the RF compartment. The thermal switch, S5, will open when the temperature exceeds a safe operating level.

4.13 BANDSWITCHING CIRCUITS

The GSL-1900A bandswitch will be under the control of the remote exciter when the front panel selector switch (S7) is in the remote position. Refer to Figure 4-14. When the selector switch is in the local position, the LPA can be switched from S6, located on the front panel.

4.13.1 REMOTE BANDSWITCHING

When a band is selected in the exciter, one of the band wires from J5 will rise to +12 VDC. Wafer S2F will provide +12 VDC to the Keyline Sequencer through the remote-local switch, on the front panel, causing the switch motor B4, to rotate S2F until the notch on the wafer is on the selected band line. This is known as an "open seeking" wafer. Diodes CR6-CR13 are isolation diodes to prevent S2F from feeding +12 V back on the unselected lines. Diodes CR14-CR17 are used to generate a force function for the GCU-1935 antenna coupler when it is used. S2F is the remote slave wafer. Wafer S2E is mechanically slaved to S2F and moves to the same position as S2F. S2F is shown with band 1 selected.

4.13.2 LOCAL BANDSWITCHING

When S7 is switched to the local position, motor B4 is controlled by S2E. If SW6 is in a position other than S2F, motor B4 will run until S2E lands on the open contact. SW6, the front panel bandswitch selector, provides +12 VDC for S2E.

4.13.3 LOCAL WARNING LAMP

If S7 is in the local position or if the CPLR 50 ohm load switch S6, is in the IN position, then DS9 will be illuminated. For normal operation of the system, the lamp should be extinguished.

4.14 PS-1900A POWER SUPPLY

A schematic diagram of the PS-1900A power supply is shown in Figure 5-32. It contains the 28 VDC unregulated supply, plate and screen power supplies, crowbar circuit and the high voltage protection circuit.

4.14.1 UNREGULATED 28 VOLT SUPPLY

The 115/230 VAC input is fed to transformer 2T2 through the panel mounted fuses 2F3 and 2F4. 2F3 and 2F4 are 5 amps for 230 VAC operation and must be 10 ampere rating for 115 VAC. 2K2 is energized when the filaments are turned on. High line and low line taps are provided for 2T2 so that better regulation can be maintained at the output of 2T2 when operating at input voltages outside the ±10% line limits. The primaries of 2T2 are connected in series for 230 VAC operation and in parallel for 115 VAC. Fan 2B1 provides cooling air for the power supply. The AC output of 2T2 is fed to diode bridge 2CR4 where it is rectified and fed to filter capacitor 2C1. The unregulated 28 volts is fed to the LPA where it is used to provide regulated +24 VDC. The unregulated 28 VDC is also used to provide the voltage for the two servo amplifiers in the LPA. Fuse 2F5 is a 10 ampere fast blow that protects bridge 2CR4 from short circuits.

4.14.2 PLATE AND SCREEN POWER SUPPLY

The 115/230 VAC input is fed to transformer 2T1 via 2F1, 2F2 and the contactor 2K1. For 115 VAC operation 2F1 and 2F2 are 30 amperes. For 230 VAC operation the fuses are 15 amperes. 2T1 is also provided with high and low line taps for operation outside the line voltage limits. The primaries are connected in parallel for 115 VAC operation and are in series for 230 VAC operation. 2T1 has two secondaries, X1 and X2 for the 2500 VDC plate supply, and X3 and X4 for the 250 VDC screen supply. The two supplies are effectively connected in series since the screen supply negative side is connected to the tube cathode and the positive side is connected to the chassis ground. The 2500 VDC is rectified in individual diodes 2CR5-2CR8. Filtering is accomplished by 2C2, 2L1 and 2C4. 2R2 is a current surge limiting resistor while 2R9 and 2R10 are bleeder resistors that will discharge the power supply within one second after shut down. The screen DC is obtained from diode bridge 2CR3 and is filtered by 2C5. 2R3 is a surge limiting resistor while 2R5 is the bleeder for the screen supply.

4.14.3 CROWBAR CIRCUIT

Relay 2K3 is a protection circuit that will blow fuses 2F1 and 2F2 if the plate contactor sticks. Anytime the plate contactor is energized and there is no unregulated +28 VDC, the relay contacts of 2K3 will short the primary to 2T1. If 2K3 is energized, the short is removed and the circuit performs normally. 2K3 is shown in the de-energized condition. When the filaments are first turned on the unregulated +28 VDC feeds through 2CR10 and pulls in 2K3. 2C6 and 2R6 form a short time delay to keep 2K3 energized until 2K1 de-energizes when the unit is turned off.

4.14.4 H.V. PROTECTION CIRCUIT

The crowbar circuit will blow the fuses 2F1 and 2F2 if the filaments are turned

off and the contactor is closed. The HV protection circuit monitors a sample of the high voltage and the voltage on the interlock line. If there is high voltage present and no voltage on the interlock line, this means that the contacts of 2K1 are stuck and high voltage would be present even though the front panel plate lamp goes out. If this event occurs, a short is placed on the regulated +24 VDC line and the entire unit is shut down.

The HV protection circuit consists of 2Q1, 2Q2, 2Q3 and associated components. A sample of the high voltage is obtained from voltage divider 2R11, 2R12, 2R13, 2R15, 2R16 and 2R17. This sample voltage is fed to the base of Q1 and will fire SCR 2Q3 if the sample is higher than 5.1 volts. When 2Q3 fires, a short is placed on the regulated +24 VDC line and the unit is shut down (filament relay 2K2 de-energizes). However, if the interlock line is on, a condition indicating that high voltage is supposed to be present, transistor 2Q2 will be saturated and the base of Q1 will not be allowed to charge up to the required firing voltage. 2R18 and 2R19 divide down the interlock voltage to drive the base of 2Q2. 2C7 provides a time delay to prevent 2Q3 from firing during normal operation when the interlock line drops to zero. 2C8, 2C9 and 2C10 are filter capacitors to prevent false firing of 2Q3 caused by RF, noise or voltage spikes on the +24 VDC line.

4.15 TYPICAL TUNING SEQUENCE

Figure 4-15 illustrates the tune cycle events with respect to time. Figure A shows the GSL-1900A only. While Figure B shows the GSL-1900A with the GCU-1935. Certain events such as tuning cannot be precisely depicted in time because of the elements mechanical travel with respect to the frequency in use. Figure 4-16 is a tune cycle flow diagram.

4.15.1 GSL-1900A ONLY

When using the GSL-1900A only, the tune timer 1A6U1 is set for approximately 3 seconds.

When a new tune command is given from the exciter the following events occurs:

1. [redacted]
2. *Pre-position
3. [redacted]
4. *Loading
5. Tune Timer expires
6. Tune Fault.

(* Tuning Events)

These events are discussed below.

4.15.1.1 [redacted]

In order to start a tune cycle, the mode switch on the exciter must be placed in KW TUNE. This starts tune timer 1A6U1 (refer to Figure 4-16). The tuning lamp 1A3DS3 also illuminates (refer to Figure 4-17B).

4.15.1.2 Pre-Position

Pre-position timer 1A11U1 is enabled from tune timer relay 1A6K1. The keyline relay is also energized from 1A11, while the tuning elements travel under closed loop servo control to their pre-position setting near Cmax. The keyline is opened, as there is no requirement for RF at this time. The servo amplifiers receive their enable as shown in Figure 4-18.

4.15.1.3 [redacted]

When the pre-position cycle has expired, the keyline is closed. Keyline control relay 1A6K4 de-energizes, keying the transmitter. The 1A11 Pre-Position Board now forces only the plate tuning and loading capacitors to Cmin under closed loop servo control. Figure 4-19 shows the enable. While the elements are being forced the relationship between the DC plate current, I_p, and the plate peak RF voltage, E_{pk}, is monitored by the 1A9 Level Control Board. When the plate current (I_p) dips and the RF plate voltage (E_{pk}) peaks, the comparator 1A9U1B, pin 4 drops to 0. This terminates the force

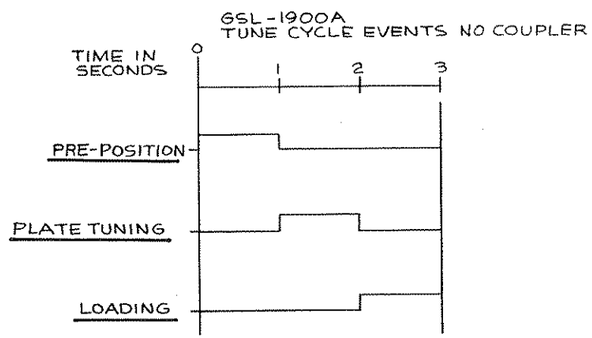

Figure A

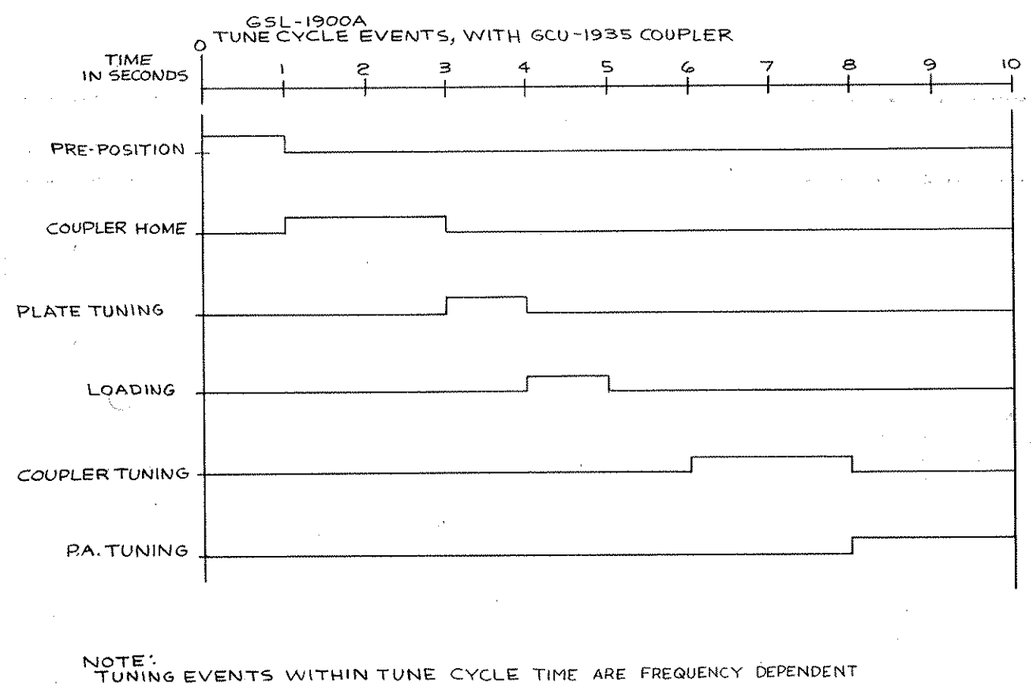

Figure B

FIGURE 4-15 TUNE CYCLE TIMING GSL-1900A TP 4-15

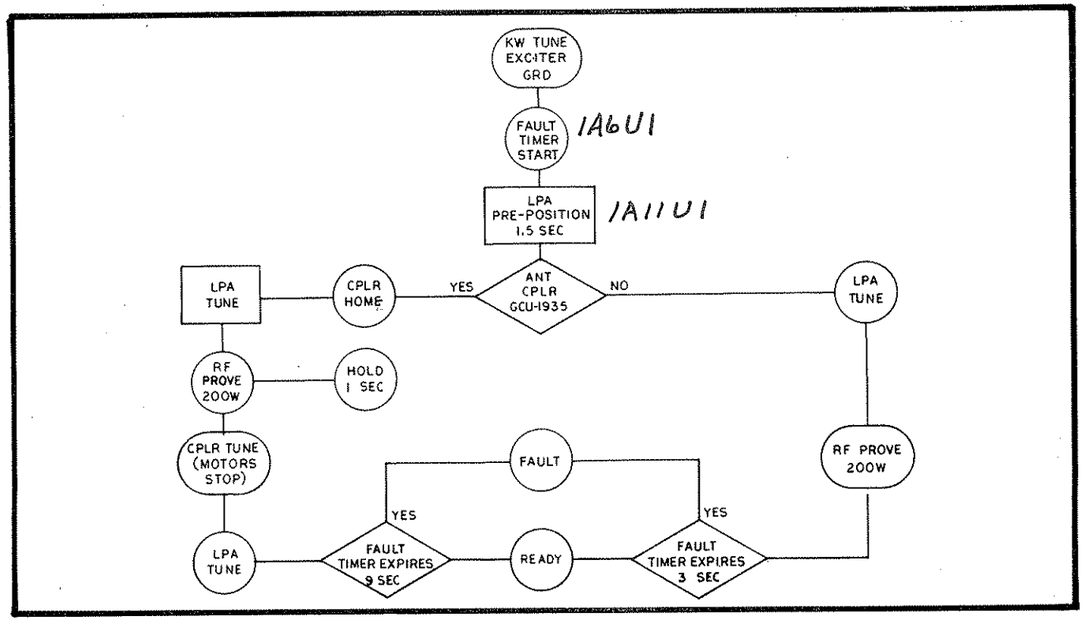

FIGURE 4-16 TUNE CYCLE FLOW DIAGRAM GSL-1900A TP 4-16

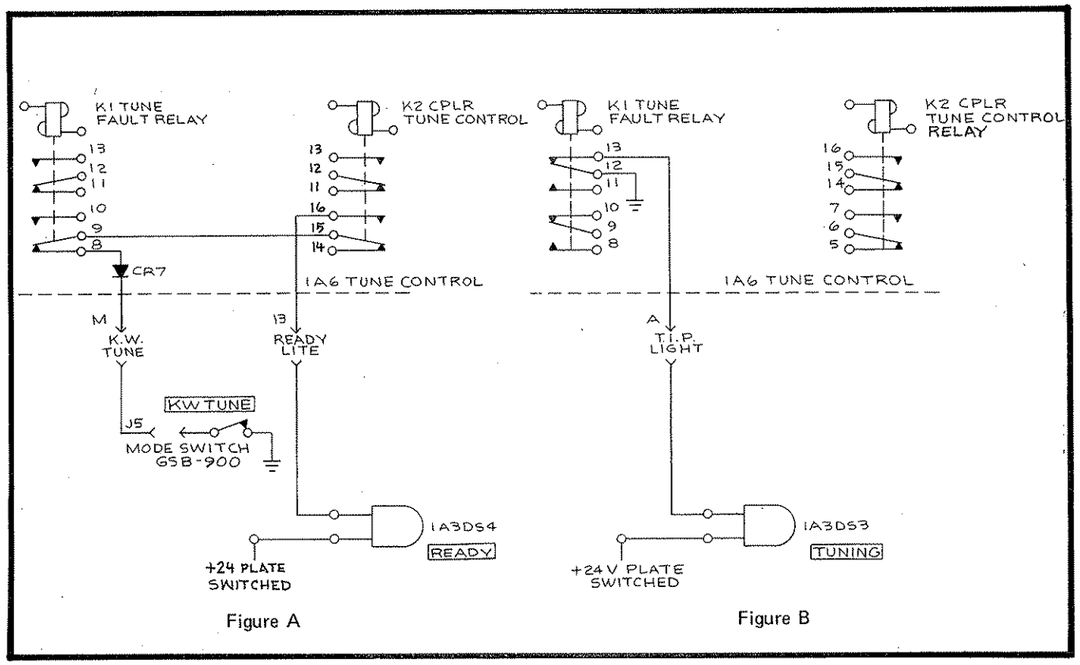

FIGURE 4-17 TUNING AND READY LAMP CONTROL TP 4-17

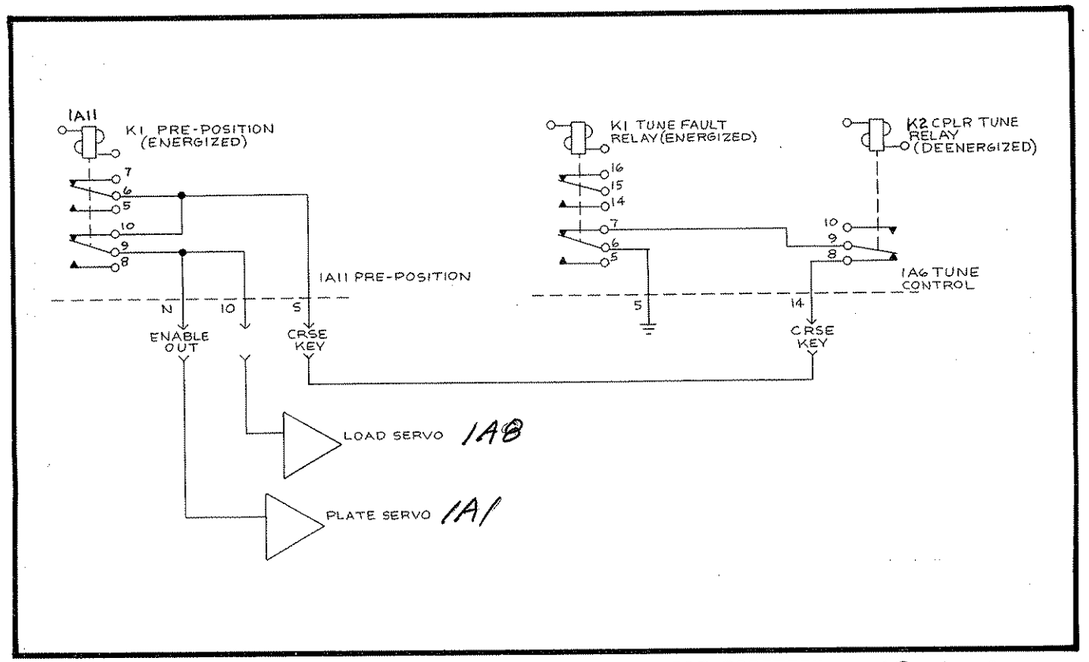

FIGURE 4-18 SERVO ENABLE DURING PRE-POSITION TP 4-18

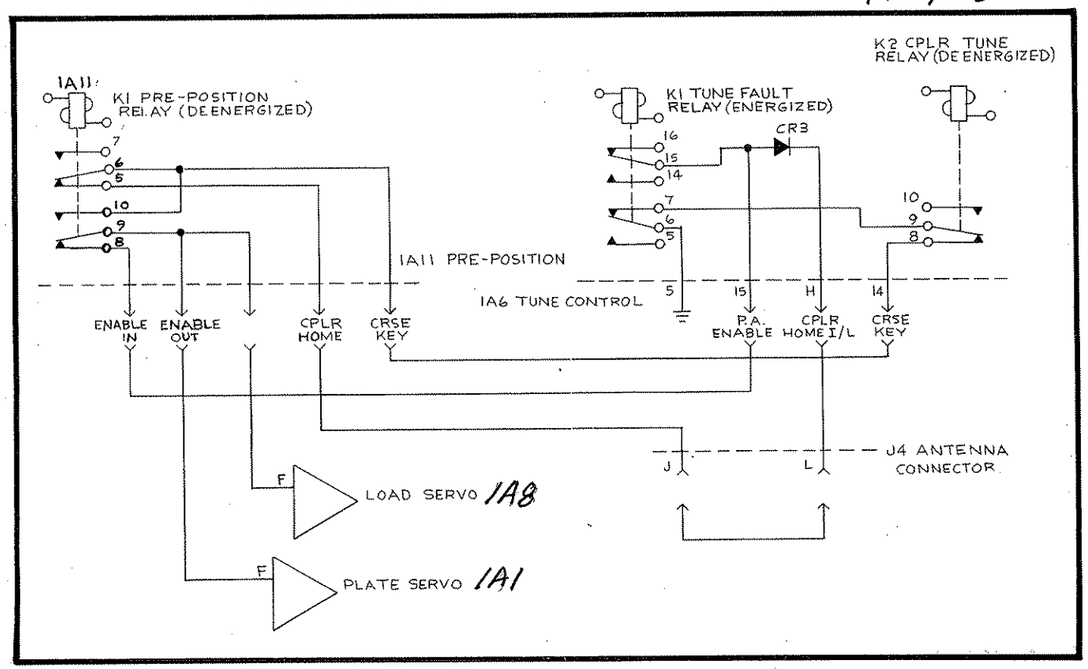

FIGURE 4-19 SERVO ENABLE DURING FORCE TP 4-19

function on the 1A11, indicating the network has crossed over a tune point. Both tuning elements, plate and loading are now turned over to the phase and loading detectors by 1A11K1 and K2. During this period the plate tuning must occur first. At this time the plate of V1 is coarsely tuned, resulting in low RF plate voltage. Since the ACC control voltage is regulated by the plate RF voltage, the exciter is driving the grid at full AM output power causing a large negative error signal to appear at the loading comparator output. If the loading is permitted to run at this point, the loading coil L8 would be driven violently into the end stop.

In order to prevent this from happening, the loading lockout relay 1A9K1 interrupts the error signal from loading Servo Amplifier 1A8 for a period of 1.5 seconds, governed by timer 1A9U2. 1A9U2 receives its enable from 1A6 pin L as shown in Figure 4-7.

Should the timer expire while the plate is still running, the loading lockout relay is maintained in the energized condition by the proximity switch chopper which detects plate motor motion, as indication that the plate is still running.

4.15.1.4 Loading

When the plate tuning is complete and timer 1A9U2 has expired, the load servo 1A8 may run. During this period RF power will develop. It is detected by the Wattmeter Assembly 1A4 and amplified on the Regulator Board 1A5 by OP-AMP 1A5U1. This DC voltage is used to drive RF prove transistor 1A6Q1 which energizes relay 1A6K2 at approximately 200 watts. Servo enables are now enabled as shown in Figure 4-20. If required, plate tuning may occur after the loading sequence. If so, the loading will be disabled via the loading lockout relay as previously discussed. This activity will continue until the outputs of the phase and loading detectors are zero.

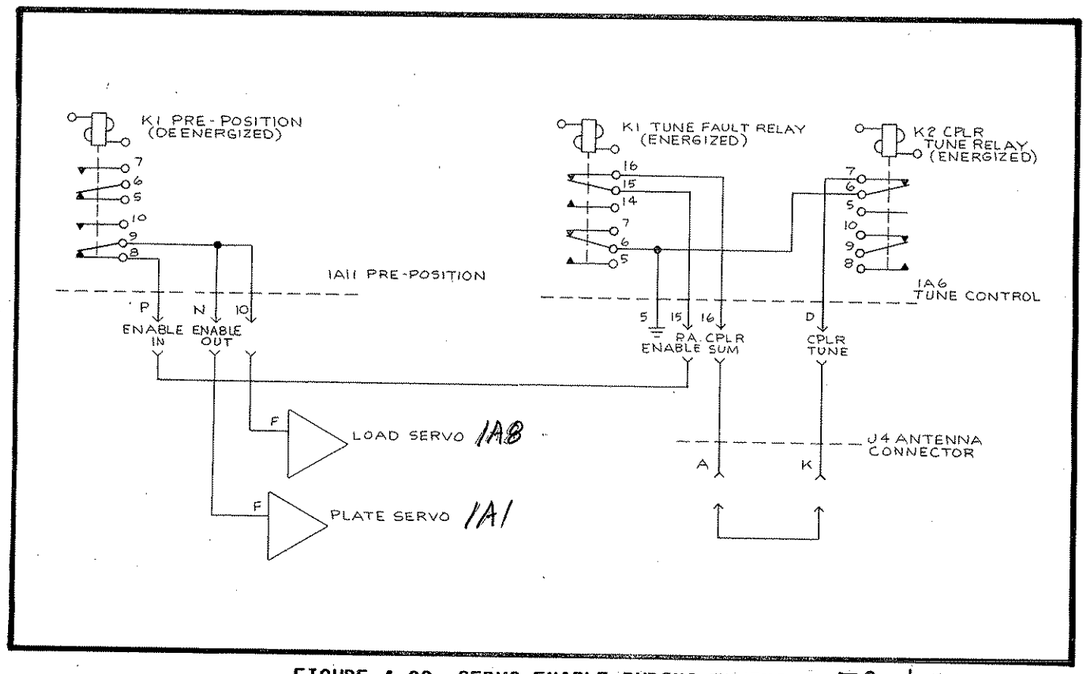

FIGURE 4-20 SERVO ENABLE DURING TUNING TP 4-20

4.15.1.5 Tune Cycle Timer Expires

When the Tune Timer 1A6U1 expires and the exciter mode switch is still in KW TUNE, the Ready Lamp will illuminate (Figure 4-17A). When the exciter is placed in any other mode position the Ready Lamp will extinguish.

4.15.1.6 Tune Fault

During the course of the tune cycle should the power amplifier fail to develop tune power the Coupler Tune Relay 1A6K1 will not energize. When the Tune Fault Timer 1A6U1 expires and the exciter switch is still in KW TUNE the Fault Lamp will illuminate (Figure 4-21).

4.15.2 GSL-1900A WITH GCU-1935

When using the GSL-1900A with the GCU-1935 the transmitter tuning sequence remains the same as discussed in the GSL-1900A tuning. But is interceded with coupler tuning functions. Figure 4-15B illustrates the tune cycle events. The Tune Timer has been extended to 10 seconds to accommodate the GCU-1935.

When a KW TUNE command is given from the exciter the following events occur:
1. Tune Timer Starts
2. Pre-Position
3. Coupler Home
4. Plate Tuning
5. Loading
6. Coupler Tuning
7. PA Tuning
8. Tune Timer Expires.

4.15.2.1 Tune Timer Starts

In order to start a tune cycle the mode switch on the exciter must be place in KW TUNE position. This starts Tune Timer 1A6U1. The Tuning Lamp 1A3DS3 also illuminates. Refer to Figure 4-17.

4.15.2.2 Pre-Position

Pre-Position Timer 1A11U1 is enabled from Tune Timer Relay 1A6K1. The keyline relay is also energized from 1A11, while the tuning elements travel under closed loop servo control to their pre-position setting near Cmax. The keyline is opened as there is no requirement for RF at this time. The servo amplifiers receive their enable as they did in Figure 4-18.

4.15.2.3 Coupler Home

A home position has been selected for the coupler tuning elements. This position, Cmax and Lmin, facilitates coupler operation by providing a fixed position from which all coupler tuning will begin. The home position is also used to signal the PA to begin its tuning by enabling the plate tuning and loading servo amplifiers. Refer to Figure 4-22. Wires J and L now complete the GSL-1900A servo enable through home interlock switches S2A and S2. These switches are "anded" together and cam operated by their respective gear trains. Each is closed at the home position. Pin J also signals the coupler load/pad relays to assume the 50 ohm load position. Diode CR6 on the 1A6 Timer Board provides this, while also enabling the GCU-1935 servo amplifiers. The network elements travel under closed loop servo control to their home position. Upon arrival at the home position a ground is also supplied to the 1A6 through CR4, starting Timer U1. This timer inhibits the coupler tune function for 1.5 seconds in order to provide sufficient time for the PA to tune.

4.15.2.4 Plate Tuning

The plate tuning activities remain the same as with GSL-1900A only. The GSL-1900A servo enable is now controlled by pin A and K (Figure 4-23). When the coupler tune relay energizes, the 50 ohm load relays are energized by pin B on the 1A6 Tune Control Board. Also note 1A2K1 (Coupler Tune Control) is de-energized, inhibiting the coupler from tuning by leaving the servo amplifier signal lines in the home position.

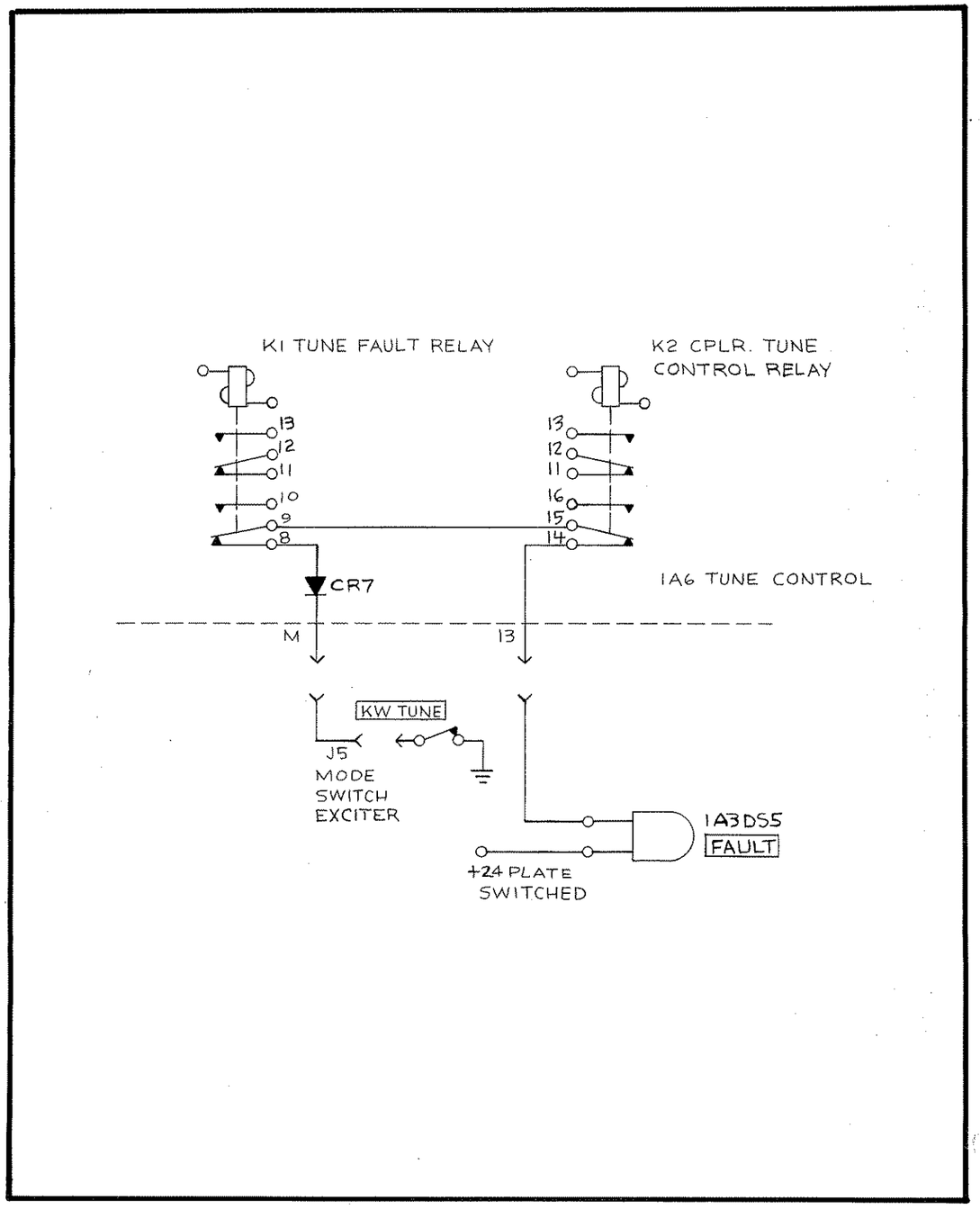

FIGURE 4-21 FAULT LAMP CONTROL TP 4-21

4.15.2.5 Loading

Loading activities also remain the same as with the GSL-1900A with the exception of the servo enable path as shown in Figure 4-23.

4.15.2.6 Coupler Tuning

When timer 1A6U1 expires 1A6K1 de-energizes. If coupler tune relay 1A6K2 is energized, (indicating tune power) the coupler is permitted to tune. The 1A6 board provides a ground to CR3 engaging relays K2 and K4. These relays, in conjunction with relays K3 and K1, energized by CR1, form a 6 db 50 ohm pad (Figure 4-24). 1A2K1 Tune Control Relay is also energized. This action transfers the Servo Amplifier input signals to the phase and magnitude detectors. The servo enable is provided by 1A6CR5.

At this time also note the GSL-1900A servo enable. The GSL-1900A amplifiers 1A8 and 1A1 are disabled during this period. The reason for this is the PA network is tuned to 50 ohms. During the course of coupler tuning the coupler input impedance will vary until a suitable match has been provided by the tuning network. If the GSL-1900A servos 1A1 and 1A8, were permitted to run while the coupler is tuning, the PA network would attempt to track these variations. This is an undesirable condition. In order to prevent this from occurring the PA servo enable is now interrupted by 1A6K1 and controlled by 1A2K2 (Figure 4-24). While the coupler is tuning 1A2K2 is energized by the proximity switch choppers and the PA servos are disabled.

4.15.2.7 PA Tuning

When the GCU-1935 has completed tuning the coupler sum relay 1A2K2 de-energizes and provides the PA with a servo enable. If required, the PA may final tune. This tuning is usually small and primarily a loading function. This completes the tuning of both the PA and coupler.

4.15.2.8 Tune Cycle Timer Expires

When the Tune Timer 1A6U1 expires and the exciter mode switch is still in KW TUNE the Ready Lamp will illuminate (Figure 4-17A). Note also that 1A6K2 coupler tune relay is still energized. This provides a ground on the coupler tune line, pin K, which will still energize both 50 ohm and pad relays, K1-K4 in the GCU-1935 (Figure 4-25). When the exciter is placed in any other mode position 1A6K2 will de-energize, extinguishing the Ready Lamp. This also releases the load/pad relays, providing a straight through configuration.

The system is now ready for operation.

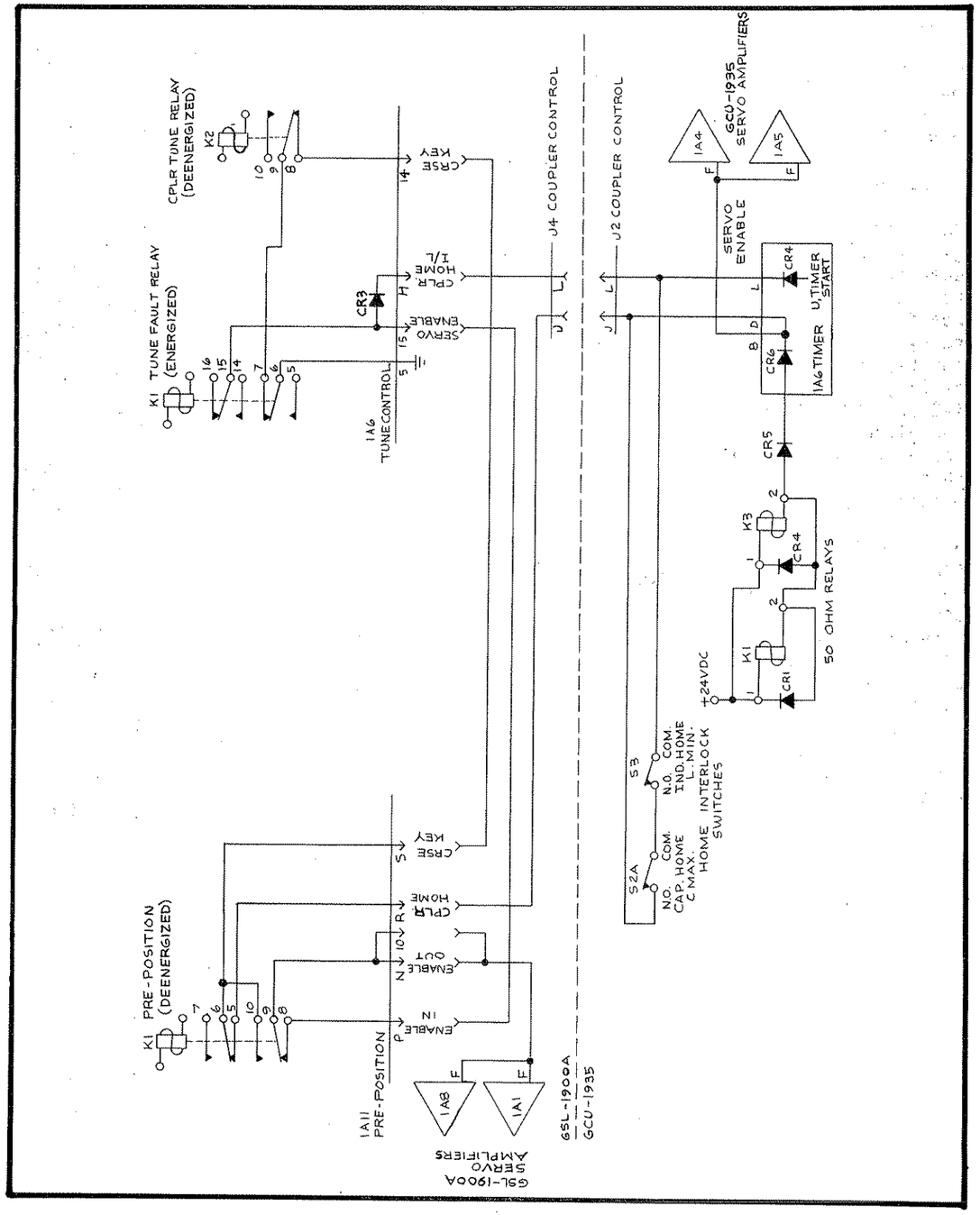

FIGURE 4-22 SERVO ENABLE WITH GCU-1935 HOME POSITION, PA TUNE TP 4-22

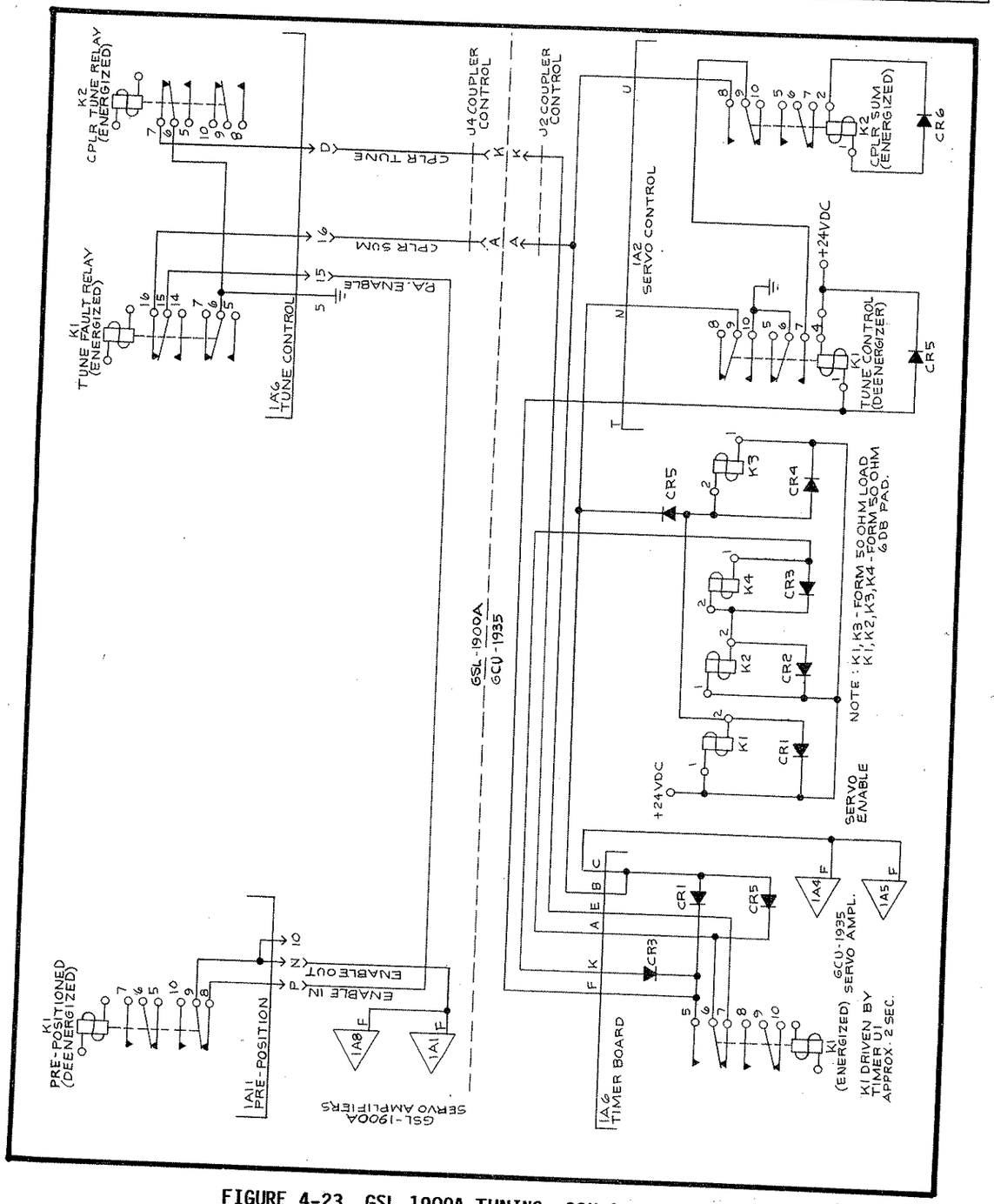

FIGURE 4-23 GSL-1900A TUNING, GCU-1935 DISABLED TP 4-23

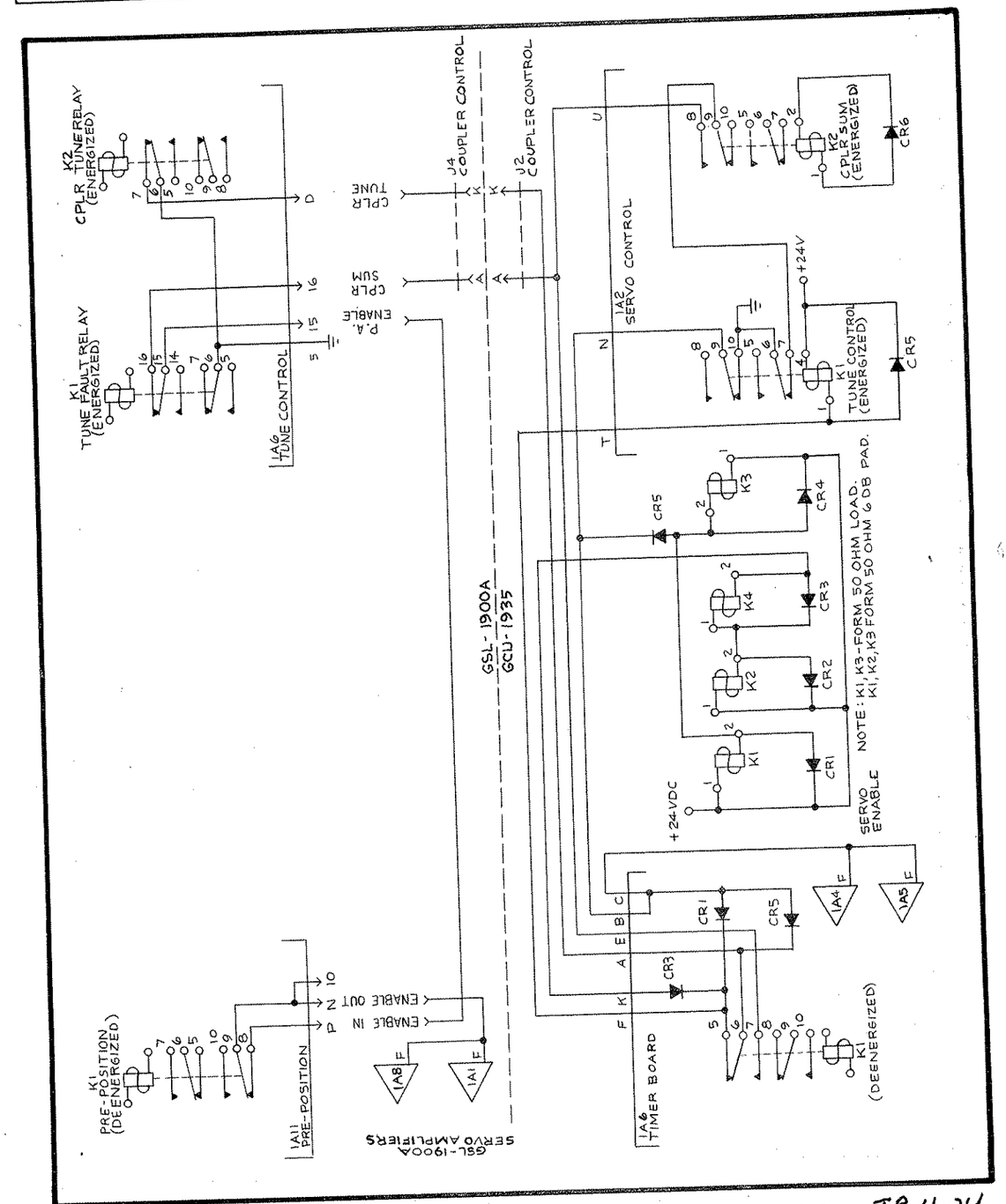

FIGURE 4-24 GSL-1900A TUNED AND DISABLED, GCU-1935 TUNING TP 4-24

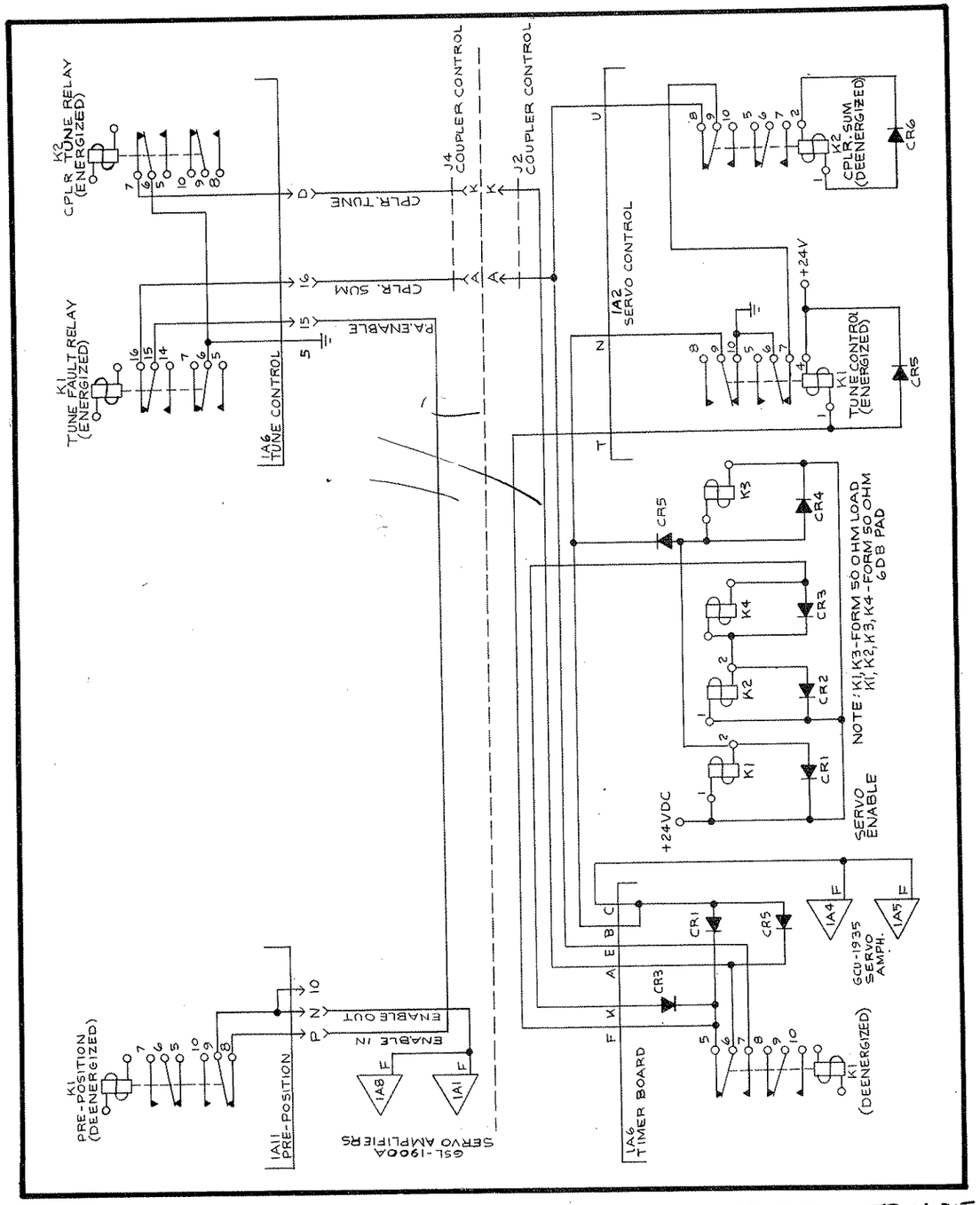

FIGURE 4-25 TUNED AND DISABLED, GSL-1900A, FINAL TUNE TP 4-25

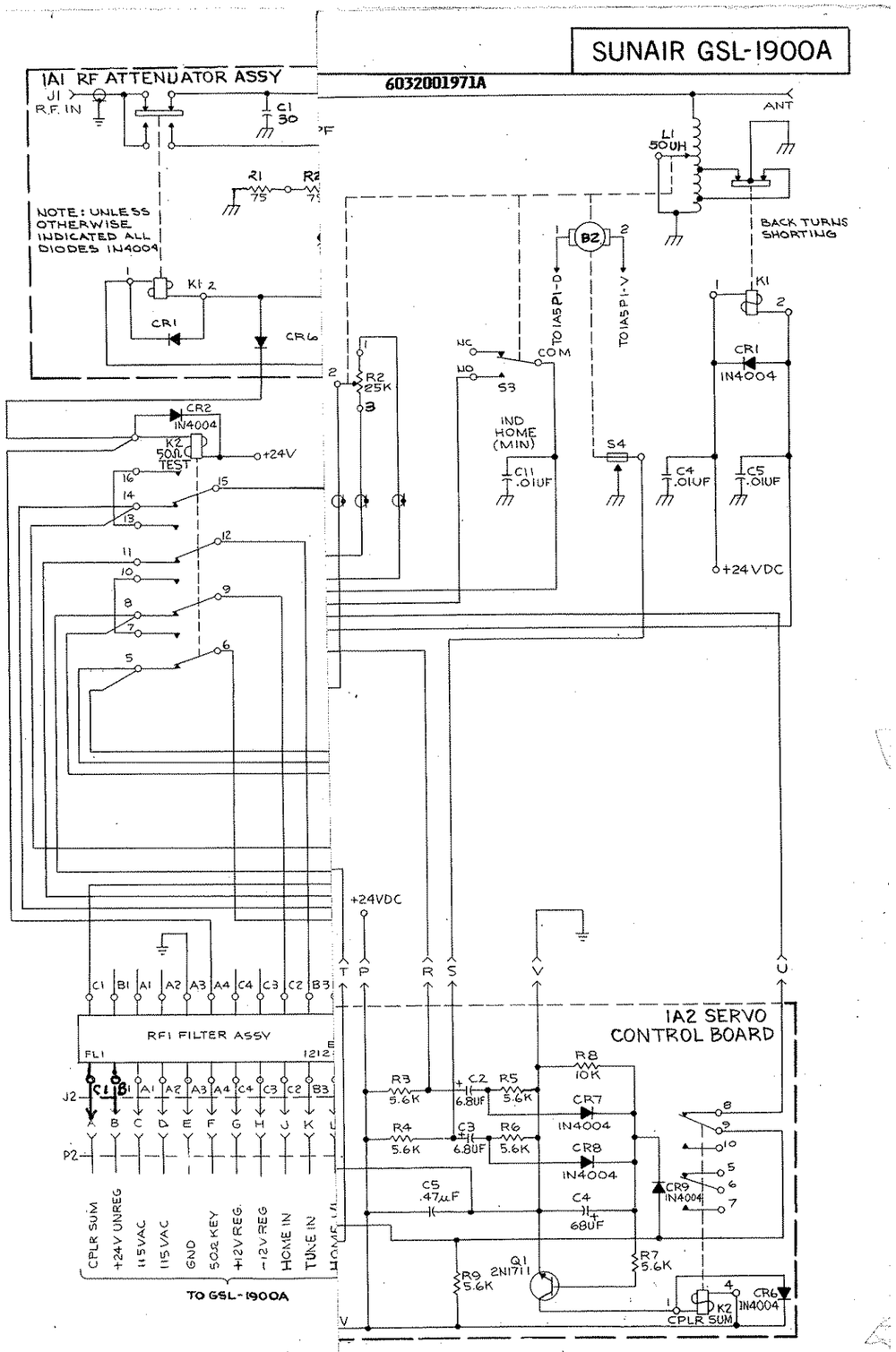

-26 GCU-1935 TUNE CYCLE SCHEMATIC, SIMPLIFIED

TP 4-26

SECTION V

MAINTENANCE AND REPAIR

WARNING

Hazardous voltages exist in RF power amplifiers, couplers, and their associated power supplies. When servicing this type of equipment, safe operating procedures must be followed at all times even though the equipment contains various safety and protective devices. The fact that devices such as voltage ON indicator lamps, mechanical switch interlocks, fuses and overload lockouts are present, should in no way lessen the requirement to observe and practice safe operating procedures as it is possible that these protective devices could fail just as any other component or part may experience a failure.

NOTE

Figures for Section V appear following paragraph 5.7.2.

When servicing this class of equipment, the following procedures should be followed:

1. Turn off plate and filament power supplies. Observe that indicator lamps are OFF.

2. Disconnect the AC power mains from the power amplifier.

3. If covers are removed from the equipment, short (connect) all high voltage components to the chassis with a grounding stick before entering a compartment. See Figure 5-1.

4. Untrained personnel should not be allowed to service the equipment. It is good practice to post warning signs during maintenance.

5. If servicing is being performed with the covers off, the AC power source must be disconnected from the unit and it is **ABSOLUTELY NECESSARY** to short (connect) all high voltage components to the chassis each time the plate voltage OFF switch is activated.

5.1 PREVENTATIVE MAINTENANCE

In the normal service life of any piece of equipment, faults and breakdowns will develop. In order that the necessary repairs may be carried out in a reasonably short time, a logical testing routine must be followed. The maintenance technician should familiarize himself with the circuitry and the physical layout of the equipment prior to the occurrence of trouble. Refer to Figures 5-2 and 5-3.

When repairs are necessary, it is recommended that this servicing be done whenever possible by competent radio technicians, supplied with suitable tools and test equipment.

5.1.1 PERIODIC INSPECTIONS

The GSL-1900A should be inspected regularly. Table 5-1 is a recommended inspection schedule. Unusually severe environmental conditions may require more frequent inspections.

5.1.2 LUBRICATION

The cooling fan, blower, and servo motors

used in the GSL-1900A have sealed bearings. No lubrication is necessary. The two vacuum variable capacitors will not require relubrication in most cases. Under conditions of extreme operating temperature, high humidity, corrosive or dusty atmosphere or frequent operation, relubrication may become necessary. If relubrication is required the following procedure is recommended:

1. Manually rotate the plate tuning drive assembly to the maximum capacity limit stop. Rotate the blue bearing shroud until the lubrication hole is in a convenient position (Figure 5-4). Lubricate according to instructions on Figure 5-4. Interval: 4 months.

2. Loading inductor L8, will require periodic lubrication of the contact wheel drive shaft. Remove old grease and accumulated dirt with a solvent such as trichloroethane*. Relubricate the shafts with a small amount of anti-sieze lubricant, C5-A (Sunair p/n 0842210008). Wipe off all excess lubricant. Excessive lubrication is not desirable as the inductor turns at high speed and will throw lubricant on adjacent components. Refer to Figure 5-12.

WARNING

**Trichloroethane is harmful if inhaled. Use only in a well ventilated area. Excessive breathing of trichoroethane vapor can result in death.*

5.1.3 RELAY MAINTENANCE

Relay failure is usually caused by dust or dirt which collects on the contacts and results in high contact resistance, sticking or sluggish operation. Pits or metal spikes formed by arcing or overloading cause high contact resistance and possibly locked or bridged contacts. If periodic inspections of relay contacts reveal dirty or irregular surfaces, burnish the contact surface with a piece of crocus cloth or very find sandpaper. Be careful not to remove excess metal. Burnish break-contacts while exerting their normal pressure and burnish make-contacts while the relay armature is hand operated. Always clean relay contacts after burnishing.

The GSL-1900A relay complement, listed in Table 5-2, are plug-in types.

BE SURE THAT THE TYPE LISTED IS USED.

5.1.4 TUBE CLEANING PROCEDURE

CAUTION

BERYLLIUM OXIDE (BeO) CERAMICS. BREATHING DUST OR FUMES CAN KILL.

Normal use of electron tubes having Beryllium Oxide Ceramics is safe. However, BERYLLIUM-OXIDE DUST OR FUMES ARE HIGHLY TOXIC AND BREATHING THEM CAN RESULT IN SERIOUS PERSONAL INJURY OR DEATH. Never alter, disassemble, grind, lap, fire, chemically clean, or perform any other operation on any ceramic parts of electron tubes or accessories which could possibly generate dust or fumes.

Beryllium Oxide Ceramics are often used to conduct heat from power tubes (directly from the anode of some external-anode types). They are also used as socket insulating mater-

ial for base cooling. Most Beryllium Oxide Ceramic parts in power tubes are identified as such. Because a label may be obliterated or missing, or a Beryllium Oxide Ceramic part may not be identified, the manufacturer should be contacted before performing any work on the ceramic parts of any power tube or accessory. At the end of its useful life, each tube or accessory containing Beryllium Oxide Ceramics should be returned prepaid to the manufacturer with written authorization for its disposal.

Ship to: EIMAC Division of Varian
301 Industrial Way
San Carlos
California 94070

The power amplifier tube, V1 is a ceramic-metallic type which depends upon a stream of air passing through the cooling fins to cool the anode. If the fins become clogged with dirt, the air flow is reduced and the tube life is shortened. Clean the heat radiating fins as follows:

a) Remove the tube per instructions in paragraph 5.7.

b) Direct a low-pressure (50 psi or less) air stream through the cooling fins in the opposite direction of normal air flow.

c) Be sure the fins are clear of foreign material before replacing the vacuum tube.

5.1.5 AIR FILTER CLEANING

a) Remove the air filters from the power supply and RF units by removing the four retaining screws on the filter holder.

b) Dip the filter in a cleaning solvent (hot soap solution), rinse and allow to dry.

c) Replace in holders.

5.2 CORRECTIVE MAINTENANCE

5.2.1 TEST EQUIPMENT REQUIRED

The following equipment or their equivalent is required to perform the specified tests.

1. VOM Triplett Model 630
2. Digital Voltmeter HP-3476A DVM or equal
3. RF Wattmeter, Bird Thruline Model 43 with 100 watt (100H) 2-30 MHz element and 250 watt element (250H)
4. RF Wattmeter, Bird Thruline Model 43 with 1000 watt, 2-30 MHz element (50 ohms)
5. Coaxial Resistors:
   2500 watts, 50 ohms, Bird Model 8890
   150 watts, 50 ohms, Bird Model 8135
6. Vector Impedance Meter Hewlett-Packard 4815A
7. Frequency Counter HP-5382A or equal
8. Keyline/Audio Control Box (Figure 5-7)
9. Oscilloscope, Tektronic 465B
10. Alignment Tool (p/n 1002860008)
11. High Voltage Grounding Stick (Figure 5-1)
12. Hewlett-Packard 412A VTVM or equal
13. HP 410C RF Voltmeter or equal
14. HP Probe-T-Connector 50 ohm Model 11042A
15. Zero Center Meter (Figure 5-8)

16. Audio Generator HP-200CD
17. Auto Transformer.

5.2.2 CONNECTORS AND CABLES

Exciter To GSL-1900A Control:

1. 0754690008 MS-3106E-28-21P 1 Each
2. 0754320006 MS-3106A-28-21S 1 Each
3. 0579240002 Cable, 37 Cond. 10 Feet
4. Antenna Coupler Test Plug P4:
   0754340007 MS-3106A-28-9P 1 Each
   Wire Jumpers: Pin A to Pin K
   Pin J to Pin L
5. AC Input: Cable supplied with equipment, must be connected to AC line by compression type terminals
6. Misc. Coaxial Cables:
   RG-58A/U for Input
   RG-8A/U for Output
7. T-Connector, UG-274/U
8. T-Connector, UG-28/U
9. Coaxial Cable, RG-8A/U with UHF and Type N connector, 3 feet
10. Coaxial Cable RG-58A/U with BNC connectors, 1 foot (2 required).

5.2.3 PRIMARY POWER INPUT

Primary power should be supplied through a switch box with either fuses or circuit breaker protection. It should be capable of supplying 230 V at 15 amps or 115 V at 30 amps.

The power input connection to the amplifier must be connected to 2J1 B and C and the neutral (ground) connected to A. Conductor wire size should be #10 AWG or larger.

5.2.4 TEST CONDITIONS

Set up amplifier and test equipment as shown in Figure 5-5. Install Test Covers.

5.2.5 POWER SUPPLY

Refer to paragraph 2.7.2 and Figures 2-10 and 2-11.

5.2.6 POWER INPUT CONNECTION 2TB1

Refer to paragraph 2.7.2 and Figures 2-10 and 2-11.

WARNING

Do not operate this equipment under any condition without the grid plenum cover in place. Failure to do so will destroy the transmitting tube!!!

WARNING

5.2.7 FILAMENT CHECK

a) Remove the grid plenum cover and connect a 0-10 VAC 1% voltmeter across the filament terminals on the tube socket. Replace the cover, allow for voltmeter leads to exit. Pin 5 & 6 of T-2 See Page 5-30 Fig 5-11

b) Place the exciter's mode switch in USB.

c) Press the "Filament On" button on the GSL-1900A.

d) The filament indicator lamp should be illuminated and the blower should operate.

e) Note the filament voltage after 3 minute warm-up. Voltage must be 6.0 ± 0.3 VAC. If necessary to adjust resistors R10 and R11 in the grid plenum to achieve the correct filament voltage, shut down filament by pushing "Filament Off" button, BEFORE ADJUSTING. Adjust in small increments

keeping the taps in the same relative position. Turn on filaments and recheck voltage.

5.2.8 WATTMETER ADJUSTMENT - 1A4, RF Wattmeter Assembly See page 5-39 Fig 5-20

(This is a preliminary adjustment, the reflected power must be nulled at the 1 KW level later.)

a) Turn filament supply on. Connect a 50 ohm load to the ~~wattmeter~~ RF output connector, 1A4J2. Set exciter to 12.0 MHz.

b) Connect the exciter's RF output to the RF input connector, J1.

c) Remove the wattmeter cover and connect positive lead of VOM to 1A4C7 and negative lead to chassis. Use the 1.0V + D.C. scale. Apply RF in the CW mode (80-100 watts) and adjust 1A4C1 (nearest the relay) for a complete null.

d) Reverse the RF input and the load cable connections and repeat the null procedure by adjusting 1A4C2 (nearest the output) with the VOM connected to 1A4C8. See Figure 5-19 for the location of 1A4C1, C2, C7 and C8. Wattmeter to J1 Exciter to J2

e) Remove voltmeter and 50 ohm load, reconnect exciter RF output to J1. Connect 2.5 KW 50 ohm load to 1A4J2.

5.2.9 OP-AMP OFFSET ADJUST - 1A5, Regulator Board Page 5-29 Page 5-57

Unkeyed Static Condition. (Filaments only)

Connect voltmeter, set to 2.5 VDC scale, to the junction point of 1A5R13 and 1A5R15, connect negative lead of meter to chassis. Adjust 1A5R3 (Fwd Offset) for zero volts. Connect positive lead of meter to junction of 1A5R18 and 1A5R19. Adjust 1A5R2 (Refl. Offset) for zero volts.

5.2.10 BANDSWITCH OPERATION - 1A3, Band Selector, Bandswitch Control

With the GSL-1900A "Local-Remote" selector in the "Remote" position, the bandswitch in the LPA should slave to the exciter's frequency band information as it is changed. In the "Local" position, the front panel band selector will have to be changed to coincide with the exciter's operating frequency. Check operation, in both modes, for each band. Check operation of the Local lamp on the front panel. The lamp should be illuminated when the "Local-Remote" selector is in the Local position and/or when the antenna coupler switch is in the 50 ohm position. Return the LPA to Remote and select the 12 MHz band.

5.2.11 PLATE VOLTAGE CHECK

WARNING

DANGER HIGH DC PLATE VOLTAGE

CAUTION

SCREEN VOLTAGE (240-250 VDC) APPEARS ON THE FRONT PANEL METER SELECTOR SWITCH. DO NOT TOUCH THE METER SWITCH ASSEMBLY WHEN MANUALLY ADJUSTING THE NETWORK ELEMENTS OR MEASURING VOLTAGES.

a) Set test meter to "Plate VDC" position.

b) Place the Interlock switch S3 in the up position.

c) When "Plate Ready" lamp comes on press "Plate ON" button. Red plate lamp should come on.

d) Press "Plate OFF" button and note that voltage decays to zero.

e) Turn plate voltage on and off several times from both the LPA front panel

and the exciter KW control panel 1A2.

f) Check that high voltage interlock on LPA, interrupts high voltage by monitoring test meter set to "Plate VDC" position and push the interlock switch all the way in (voltage on) and release plunger (voltage off).

g) Pull the plunger all the way out, turn the plate on.

h) Shut off the plate voltage, connect a VOM (set to the 500 volt range) to the panel meter negative terminal and positive to the chassis, turn the test meter selector switch to the "Grid Cur" position. Apply plate voltage. Note the meter reading. This is the negative voltage applied to the filament circuit or since the tube screen grid terminal is connected to the chassis (DC ground) it is the effective screen voltage. The meter should indicate 250 to 280 V. Note also that the effective plate voltage is the plate to cathode voltage or the sum of the plate voltage reading and the cathode supply voltage. Turn off plate voltage.

i) Remove the voltmeter.

5.2.12 METER CALIBRATION - 1A2. Meter Board Assembly

a) Place the exciter mode selector switch in USB. BE SURE NO AUDIO IS APPLIED TO LINE AUDIO INPUT OR MICROPHONE INPUT.

b) Rotate the test meter selector to the "Plate Cur" position.

c) Connect the digital voltmeter (DVM) across the two PCB terminals (wire attach points) on the meter board. (Positive lead to terminal that connects to end of potentiometer.)

d) Turn plate voltage on. Close the exciter keyline and adjust the bias potentiometer, R8 on the lower rear RF panel until the DVM reads 0.300 volts. Adjust 1A3R1 until the panel meter reads 300 ma. Remove the DVM, rotate the meter selector switch to "Plate VDC". Plate voltage should indicate between 2200 and 2500 V. (The LPA should physically be in the upright position to avoid meter error.)

NOTE

The following adjustments in paragraphs 5.2.13 thru 5.2.23 must be made with the amplifier tuned automatically at 12 MHz. If automatic tuning cannot be achieved then manual tuning is required, follow these steps:

1. *Set exciter to 12 MHz. Remove AC input to PS-1900A. Bandswitch should slave exciter band information.*
2. *Set pancake inductor out 6 turns out from Lmin.*
3. *Set vector impedance meter to 12 MHz and connect to tube V1 anode.*
4. *Adjust plate loading and tuning capacitors (by turning drive belt) for 1900 ohms at 0 phase angle on vector impedance meter. (Pancake inductor L8 may have to be adjusted slightly to achieve 1900 ohms.)*
5. *Disconnect vector impedance meter from V1.*
6. *Apply AC power input to PS-1900A.*

5.2.13 ALC ADJUSTMENTS - 1A13. ALR Board

a) Set the reference voltage pot 1A13R4 to its max CW position.

b) Set ALC Norm Line pot 1A13R21 and ALC Low Line pot 1A13R22 to their max CCW position. Place test meter switch to "FWD PWR" position.

c) Set the exciter to 12 MHz, CW mode, and key. Turn the ALC Norm Line pot 1A13R21 CW and set output power to 223 VRMS. See Table 5.5 Power vs. Voltage.

5.2.14 FORWARD POWER METERING CALIBRATION - 1A5, Regulator Board 5-57

a) Key the exciter in CW.

b) Adjust FWD CAL pot 1A5R4 for 1 KW in the "FWD PWR" position.

c) Adjust the remote forward potentiometer 1A5R7 for 1 KW read on the exciter panel meter, 1A2M1. UNKey. Exciter

5.2.15 LOW LINE POWER - 1A13, ALR Board Page 5-69

a) Ground TP1 with a clip lead. Key the exciter in CW and adjust ALC Low Line pot 1A13R22 CW for 700 watts power output as indicated on the front panel meter. or approx 165 URMS on AC VTVM Remove the ground and check the 1 KW power, unkey the exciter.

b) Key the exciter, and reduce the line voltage to 215 VAC. Turn the reference voltage pot 1A13R4 CCW until the output power drops to 700 watts. Return the line voltage to 230 VAC. Unkey the exciter.

5.2.16 REFLECTED POWER ADJUSTMENTS - 1A5, Regulator Board

a) Place the exciter in ~~USB~~ CW and disconnect the 50 ohm load from the wattmeter.

b) Turn off GSL-1900A plate. Leave filament on.

c) Connect exciter RF output to GSL-1900A RF output connector.

d) Connect 50 ohm, 1 KW load to GSL-1900A RF input connector through sampling T, HP 11042.

e) Connect HP 410C to sampling T, measure across 50 ohm load. Audio Generator unit

f) Key exciter and adjust output ~~to~~ is 100 watts (70.7 volts across 50 ohms).

g) Set GSL-1900A panel meter switch to RFL PWR and adjust 1A5R5 until meter indicates 100 W. Adjust 1A5R6 until exciter meter panel meter indicates 100 watts reflected power. UNKey exciter.

5.2.17 VSWR TRIP LEVEL - 1A5, Regulator Board Place 1000Hz Remote and in CW Key in USB

a) Connect exciter output to GSL-1900A RF input and connect other equipment as shown in Figure 5-6. P. 5-25 Preset 1A5R9 full CW.

b) Turn on GSL-1900A plate.

c) Key exciter and adjust output with audio Gen output until power across 50 ohm, 1 KW resistor, is 170 watts (92 volts RMS). use Bird with 250 watt element in Reflected position.

d) Adjust 1A5R9 until VSWR trip activates.

e) Reset GSL-1900A and recheck VSWR trip level. Readjust if necessary. UNKey exciter

f) Remove two Bird 150 watt loads and leave GSL-1900A RF output connected to 1 KW load.

5.2.18 ACC LEVEL ADJUSTMENT - 1A9 Level Control Board Page 5-63

a) Set the exciter mode switch to AM.

b) Key the exciter. **ENSURE THAT NO EXTERNAL AUDIO IS APPLIED.** Place Front Panel meter in FWD Power

c) Adjust level control 1A9R1 "ACC" for 380 watts on the front panel meter. or 137 URMS on AC VTVM Then UNKey. Exciter.

5.2.19 TUNE POWER ADJUSTMENT - 1A9, Level Control Board Page 5-63

a) Place a ground on the cathode of 1A9VR2 and adjust 1A9R2 Tune Level for 220 watts. Keyed tube amp in Parallel and 105 URMS on VTVM

Preset R5 full CW Key Exciter

b) Adjust 1A9R5 RF Level CCW until the tune power begins to increase, at that point adjust the control 4 turns CW.

c) Adjust 1A9R60 ACC Limiter full CCW. UNKey Exciter.
NOTE: The ACC Limiter Control is disabled.

d) Remove ground from 1A9VR2

12.000 mHz std

5.2.20 LOADING COMPARATOR ADJUSTMENT - 1A9, Level Control Board

Set Front Panel Meter to Plate current

a) ~~Connect the zero center voltmeter (Figure 5-8) positive lead to 1A9TP1 and negative lead to the chassis.~~ Key exciter in ~~[illegible]~~ Coupler tune

b) Adjust 1A9R21 "Loading" control for ~~[illegible] volts.~~ 400ma tune power check in C/W should be 650 ma.

c) Unkey the exciter.

WARNING

Do not operate the equipment under any condition without the grid plenum cover in place. Failure to do so will destroy the transmitting tube!!!

WARNING

Page 5-61

5.2.21 GRID R.F. PEAK VOLTMETER ADJUSTMENT (IN PLENUM) - 1A7, RF Sensor Board

State when to key

a) Place the exciter in the USB mode and add drive with the audio oscillator until Unkey the power input is 20 watts. Change the front panel meter to the "Grid RF 100 VPK" position. Adjust 1A7R2 for 45 VPK on the panel meter. (Adjusting 1A7R2 CCW will increase the meter reading.) Refer to Table in paragraph 5.3.2 Peak Grid Volts vs. Power Input.

5.2.22 PLATE RF PEAK VOLTMETER ADJUSTMENT (IN PLENUM) - 1A7, RF Sensor Board

Drive the exciter in USB until the RF voltmeter indicates 1 KW output. Set the front panel meter switch to the "Plate RF 4 KV PK" position and observe the reading. Adjust 1A7R4 for .575. (Adjusting 1A7R4 CCW will increase the meter reading.) Unkey the exciter.

5.2.23 PHASE DISCRIMINATOR POLARITY CHECK

NOTE: Perform this check only if the 1A7 Board has been replaced.

9-19-85 Is no C10 or C11 on 1A7 Board

a) Connect the zero center voltmeter positive lead to 1A7C10, and negative lead to 1A7C11. Need a diagram. add. are in Grid PLENUM

b) Turn on the plate supply and key the exciter.

c) Turn the plate tuning motor in the clockwise direction, at the motor magnet end. The zero center meter should increase in the positive direction. If it is negative, shut down the equipment, short the HV supplies. Reverse the toroid leads from T3 at the terminals E1 and E2 on the RF Sensor Board 1A7 located in the grid plenum area.

d) Remove the ground from 1A9VR2. ?

5.2.24 PRE-POSITION BOARD - 1A11

a) Remove the RF input from the exciter to the LPA and terminate the exciter with a 50 ohm load.

Do not install

b) Install antenna coupler test plug, P4.

c) Apply plate voltage to the GSL-1900A.

— Only if change Board —

5.2.25 PRE-POSITION COARSE SET - 1A11, Pre-Position Board

Page 5-65

Refer to Figure 5-21 for component locations.

a) Place the VOM negative lead on 1A11VR1-C. Pin 3.

b) Place the positive lead on Band 7 wiper. Adjust Band 7 pot 1A11R4 for 15 VDC.

c) Place the positive lead on Main Band wiper. Adjust Main Band pot 1A11R3 for 17 VDC.

c) ~~If the proper network impedance cannot be achieved refer to Section 5.3 TROUBLESHOOTING.~~

5.3 TROUBLESHOOTING

If a malfunction occurs, make a thorough check of the system exciter RF output circuits and check any system follow up equipment at the output of the GSL-1900A in an effort to localize the trouble. When it has been determined that the cause of the trouble is located in the linear power amplifier, analyze the front panel meter indications and observe the indicator lamps to determine which circuits are malfunctioning. If linear power amplifier trouble occurs, trouble symptoms will normally fall into one of the following three categories: power ON-OFF control fault, tune cycle fault, or low or zero power output fault. Table 5-4 is a list of local test operating procedures which is intended to aid maintenance personnel in recognizing trouble symptoms and locating the cause of trouble.

5.3.1 TROUBLESHOOTING AIDS

(NETWORK MEASUREMENTS IF PROBLEMS ARE ENCOUNTERED)

The two vacuum variable capacitors C25 (10-400 pf) and C20 (7-1000 pf) are used with auxiliary capacitors on Bands 1, 2 and 3 because the inductance of L6 is limited to 15 µh. Table 4-1 lists the value of the auxiliary loading capacitors for each band.

In order to obtain the midpoint measurement of 105-115 ohms, the ratio between C20 (57-1050 pf) and C25 (10-400 pf) must be approximately 2.5:1 At 25 MHz the combination of C20 and its 50 pf auxiliary capacitor should be approximately 64 pf while C25 should be about 25.6 pf.

Sometimes the maximum value of C25 will be more than 400 pf when it is set to maximum capacity. This can be measured with the vector impedance meter. Set the vector impedance meter to 2 MHz. Set C25 to maximum capacity (shaft turned fully CCW until the shaft begins to unscrew). Remove the clamp from the end of the capacitor and insert the vector impedance meter probe on the end of C25. 400 pf would measure 198.8 ohms. If the value of C25 is too large at the maximum setting of one turn from the end of the stop washers, screw the body of the capacitor clockwise until it reads approximately 200 ohms. C20 is a 7-1000 pf and its value can be measured also. Use the vector impedance meter at 2 MHz. If network problems are encountered, all auxiliary capacitors can be measured with the vector impedance meter at 2 MHz. The following table lists some of the most needed values of impedance for a particular capacitance.

VECTOR IMPEDANCE MEASUREMENT
= 1/(6.28 x F x C)

CAPACITANCE	MEASUREMENT
10 pf	7950
50 pf	1590
57 pf	1395
100 pf	795
200 pf	398
300 pf	265
400 pf	199
700 pf	114
1000 pf	80

5.3.2 PEAK GRID VOLTAGE VS POWER INPUT

The peak grid voltage for a given input power can be calculated E_g(peak) = 1.414X (square root of Pin X 50). The following table lists a few values of peak grid voltage for particular power inputs in watts.

E_g (peak)	POWER IN WATTS
31.6	10
44.8	20
54.8	30
63.2	40
70.7	50

5.3.3 PLATE PEAK RF VOLTAGE

The nominal setting for 1 KW in CW mode (.575) must be multiplied by four because the full scale reading is 4000 volts. This gives a plate peak reading of 2300 V. The RF peak plate voltage can be calculated by using the formula E_p(peak) = 1.414X (square root of P_{out} X 1900). This assumes no loss in the network at 4.888 MHz. If a network loss of 1.4 db is assumed, the plate peak voltage has to be equivalent to a plate power of 1.4 KW.

5.3.4 VOLTAGE TABLES AND GRAPHS

Measured with Triplett VOM.

5.3.4.1 1A1J1 and 1A8J1 Servo Amplifier Connector Voltage Measurements

All voltages ±10% referenced to chassis ground unless otherwise noted.

1. Exciter mode switch in OFF position and unkeyed.
2. Filaments ON.
3. Plate ON.

PIN	FUNCTION	VOLTAGE
A	+28V SUPPLY	30-40V
B	+28V SUPPLY	30-40V
C	MOTOR	0V
D	MOTOR	0V
E	+FORCE	30-40V
F	ENABLE	22V
H	+12VDC	+12V
J	SIGNAL	0V
K	GRD	0V
L	RETURN	0V
M	-12VDC	-12V
N	-FORCE	30-40V
P	GRD	0V
R	GRD	0V
S	GRD	0V
T	GRD	0V
U	MOTOR	0V
V	MOTOR	0V

5.3.4.2 1A5J1 Regulator Connector Voltage Measurements

All voltages ±10% referenced to chassis ground.

1. Exciter mode switch in OFF position and unkeyed.
2. Filaments ON.
3. Plate ON.

*Measure between Pins J and L.

PIN	FUNCTION	VOLTAGE
1	KEYLINE I/L	12V
2	+24VDC TD	23V
3	-12VDC	-12VDC
4	DC O/L SENSE	0V
5	+24VDC	23V
6	+24VDC PL SW	23V
7	+24VDC SUPPLY	30-40V
8	-	-
9	-	-
10	-12V	-12V
11	+12VDC	+12V
12	+12VDC	+12V
13	-	-
14	-12VDC	-12V
15	REFL REM	0V
16	REFL METER	0V
17	FWD METER	0V
18	REFL IN	0V

PIN	FUNCTION	VOLTAGE
A	GRD	0V
B	DC O/L CONT	23V
C	O/L CONT	23V
D	DC O/L LITE	23V
E	KEYLINE	12V
F	+24VDC	23V
H	VSWR LITE	23V
J	*24VAC	24V
K	-	-
L	*24VAC	24V
M	-	-
N	+12VDC	12V
P	+12VDC	12V
R	-12V	-12V
S	FWD IN	0V
T	GRD	0V
U	RF PROVE	0V
V	FWD REM	0V

PIN	FUNCTION	VOLTAGE
A	TUNING LITE	23V
B	-	0V
C	RF PROVE	0V
D	CPLR TUNE	0V
E	-	-
F	TUNE TMR DISABLE	0V
H	CPLR HOME I/L	22V
J	-	-
K	-	-
L	KW TUNE KEY	22V
M	KW TUNE IN	22V
N	-	-
P	HOME KEYLINE I/L	22V
R	LAG NETWORK KEY	0V
S	-	-
T	-	-
U	+24VDC PL SW	22V
V	FAULT LITE	22V

5.3.4.3 1A6J1 Tune Control Connector Voltage Measurements

All voltages ±10% referenced to chassis ground.

1. Exciter mode switch in OFF position and unkeyed.

2. Filaments ON.

3. Plate ON.

4. Local/Remote SW: REMOTE

5. Band 6.

PIN	FUNCTION	VOLTAGE
1	KEYLINE	12V
2	KEYLINE	12V
3	-	-
4	-	-
5	GRD	0V
6	-	-
7	PLATE I/L	23V
8	PLATE I/L	23V
9	-	-
10	-	-
11	-	-
12	+24VDC FIL SW	23V
13	READY LITE	23V
14	CRS KEY	23V
15	LPA ENABLE	23V
16	CPLR SUM	0V
17	-	-
18	-	-

5.3.4.4 1A9J1 Level Control Connector Voltage Measurements

All voltages ±10% referenced to chassis ground.

1. Exciter mode switch in OFF position and unkeyed.

2. Filaments ON.

3. Plate ON.

NOTE 1: Depends on position of proximity switch: 0V or 24V.

PIN	FUNCTION	VOLTAGE
A	+24VDC	23V
B	LOAD ERROR	0V
C	PROXIMITY SW	NOTE 1
D	ALC IN I_B (+)	0V
E	ALC OUT I_B (-)	0V
F	I_p V_p COMP	0V
H	ACC IN	0V
J	KW TUNE	23V
K	GRD	0V
L	-12VDC	-12V
M	-12VDC	-12V
N	ACC OUT	0V
P	+24V PLATE	23V
R	FAULT LAMP	23V
S	GRD	0V
T	TUNE TMR DISABLE	0V
U	GRID SAMPLE	0V
V	PLATE SAMPLE	0V

5.3.4.5 1A11J1 Pre-Position Control Connector Voltage Measurements

All voltages ±10% referenced to chassis ground unless otherwise noted.

1. Exciter mode switch in OFF position and unkeyed.

NOTES: 1. Measure pin A to pin B (115 VAC).
2. Measure pin C to pin D (24VDC REF).
* Depends on pre-position pot settings.
\# Depends on position of network elements.

PIN	FUNCTION	VOLTAGE
A	115VAC NOTE 1	115 VAC
B	115VAC NOTE 1	115 VAC
C	REF+ NOTE 2	24V
D	REF- NOTE 2	24V
E	LOAD POT	# +1.45
F	TUNE POT	# -3.5
H	LOAD SERVO	0V
J	-	-
K	COMPTR IN	0V
L	DISCR IN	0V
M	-	-
N	ENABLE OUT	22V 7
P	ENABLE IN	22V 7
R	CPLR HOME	22V 23
S	CRS KEY	22V 22.5
T	* 1 MAIN CRS	0V 6.6
U	* BAND 7 CRS	2.5 V 5.7V
V	24V PL SW	22V 23V

5.3.4.6 Voltage Measurements - Typical

CONDITIONS A: Frequency: 12 MHz
Mode: AM, No Modulation
Output Power: 380 Watts
Drive Power: 12 Watts

1A7 RF Sensor

Load DET Grid	1A7C3	-1.75 VDC
Grid VM	1A7C4	-0.3 VDC
Load DET PL	1A7C5	5.2 VDC
Plate VM	1A7C6	2.6 VDC
ACC	1A7C7	5.4 VDC
Phase Discr	1A7C10	.05 VDC*
Phase Discr	1A7C11	.05 VDC*

*or less

1A5J5 Rear Panel Connector

ACC	1A5J5 r	10 VDC

CONDITIONS B: Frequency: 12 MHz
Mode: CW
Output Power: 1 KW
Drive Power: 40 Watts

RF Wattmeter Assy

FWD PWR DET	1A4C8	5.4 VDC

1A5J5 Rear Panel Connector

ALC	1A5J5 m	13 VDC

5.3.5 DISCRIMINATOR CHECK - AC Power, OFF

1. Remove plenum cover and connect Zero Center Meter or VTVM positive lead to discriminator output (first terminal from front) and negative lead to ground bus.

2. Set ohm meter to R X 1 scale and connect negative lead to chassis and positive lead to E1 and E2 in turn on discriminator board in plenum chamber.

3. The voltmeter should deflect to the positive side.

4. If meter indication is not correct, check the RF Sensor Board for bad components or reversed diodes.

5. Note ohm meter reading when connected to E1 and E2.

6. Meter should read 50 ohms ± 10 ohms which indicates the transformer is not shorted to its primary.

5.3.6 TRANSFORMER TEST - AC Power, OFF

1. Remove the transformer leads from E1 and E2.

2. Connect the transformer leads to the vector impedance meter probe.

3. Set the vector impedance meter frequency to 25 MHz.

4. The transformer should measure approximately 1200 ohms.

5.3.7 DISCRIMINATOR TEST - AC Power, OFF

1. At 29.9900 MHz network detuned for 600 ma plate current, discriminator output should yield ± 80 mv at 1A7C10 - 1A7C11. With the signal wires, number 128 and 36 removed from 1A7C10 - 1A7C11, open circuit output should yield ± 500 mv.

PIN	FUNCTION	VOLTAGE
1	-	-
2	-	-
3	-	-
4	-	-
5	I,E COMPARATOR	0V
6	-	-
7	-	-
8	TUNE SERVO	0V
9	-	-
10	ENABLE OUT	22V
11	*BAND 8 CRS	-5V
12	-	-
13	TO 1A6J1-P	22V
14	-	-
15	LOAD DET PL	0V
16	TUNE SERVO RETURN	0V
17	GRD	0V
18	-	-

5.3.4.6 Voltage Measurements - Typical

See page 5-17A.

5.4 PROCEDURE FOR REPLACING AND INDEXING GSL-1900A TUNING AND LOADING VACUUM VARIABLE CAPACITORS C20 AND C25.

If it becomes necessary to replace a variable vacuum capacitor or if the drive belt should jump a pulley, the procedures are as follows.

5.4.1 REPLACING THE TUNE AND LOAD CAPACITORS

a) Loosen the servo motor mounting screws and the motor drive pulley set screw (8-32 Bristol). Slide off the motor pulley.

b) Loading capacitor C20 replacement: Loosen the RF connection from the end terminal and slide clear of capacitor. Remove the two screws from the mounting clamp. Rotate the capacitor envelope clockwise to release the drive screw from the capacitor. Remove from unit. Remove the drive screw from the replacement capacitor. Be sure that the thrust bearing and washers remain in the sleeve. Engage the new unit to the drive screw and turn the capacitor counterclockwise until the sleeve just tightens, then back off very slightly until the sleeve can be moved with the finger. Be sure that the limit stop washers are turned to the counterclockwise stop as viewed from the limit assembly end cap. Replace the clamp and end terminal.

c) Tuning capacitor C25 replacement: Remove the upper rear section of the RF compartment. Loosen the RF terminal clamp and remove the mounting clamp. Remove the capacitor from the unit. Remove the drive screw and pulley and install it in the new capacitor. Set the capacitor to maximum (sleeve just free to turn as described in step b). Replace clamp, RF connection and rear wall.

NOTE

When replacing the three screws in the bandswitch end support, insure that the take up nuts are adjusted so that the switch spacers and ceramic parts are not subjected to unnecessary strain.

5.4.2 BELT REPLACEMENT

a) Turn the loading capacitor C20 pulley counterclockwise to the limit stop (maximum capacity). The capacitor sleeve should be just free to turn as outlined in step 5.4.1 b.

b) Turn the tuning capacitor C25 pulley counterclockwise until the capacitor is at its maximum setting and the sleeve is loose as in step a.

c) Replace the belt and motor drive pulley. Be sure that the tuning and loading pulleys remain in position as outlined above. Locate the motor pulley so that the belt is positioned equidistant from the two capacitor pulley flanges.

d) Adjust the belt tension so that the top section can easily be pushed down to touch the metal inductor spacer with one finger.

CAUTION

If the belt tension is too tight, the plate tuning might not be able to tune when the error signal is low when tuning near the pre-position setting. If adjustment is too loose, system may oscillate or the belt may jump off the pulleys.

e) Check tuning at several frequencies and watch the drive belt movement on the pulleys. Readjust the motor pulley position to center the belt, if necessary.

5.4.3 FINAL ADJUSTMENT

If the ratio of capacity between the plate tuning and loading variable vacuum capacitors is not correct the loading inductor will run to minimum inductance at the lower end of Band 8. This is an indication of too much loading C20 capacity, since the network tries to tune as a "pi" configuration instead of a "Pi-L" as intended. If this happens, loosen the loading capacitor C20 mounting and RF contact bracket screws and rotate the capacitor body C20 counterclockwise to reduce the capacity. Try small increments (less than ¼ turn) and check operation.

is the clear glass cap that you can see the plates inside of.

NOTE

If the belt jumps a pulley, the loading capacitor setting need not be changed as in step 5.4.2.b since it cannot move with respect to the limit stop assembly.

5.4.4 CAPACITOR TRACKING DATA

Tuning travels 20¼ turns while loading moves 13½ turns from maximum to minimum limits.

Loading Capacitor Pulley	42 Grooves
Tuning Capacitor Pulley	28 Grooves

42 Loading Capacity (Typical) C20

Minimum	20 pf
Maximum	1000 pf

28 Tuning Capacity (Typical) C25

Minimum	27 pf
Maximum	400 pf

Ratio: $\frac{L/42}{T/28}$ = 1.5:1 $\frac{1000}{400}$ = 2.5:1

5.5 REPLACEMENT OF SHEARED TAPER PIN IN GSL-1900A LOADING INDUCTOR L8 LIMIT STOP END CAP

History: Loading error signal is derived from the addition of negatively rectified RF grid voltage and a positive RF plate voltage sample. If for any reason the plate tuning operation does not occur, a large negative signal will be generated by the grid signal in the absence of plate RF voltage. Servo B3 will run inductor L8 to its maximum limit stop. If the

tube plate. After installation is complete, apply a slight downward pressure on both metal straps to be sure they are not loose. Inspect the inside of the air vent from the rear of the unit.

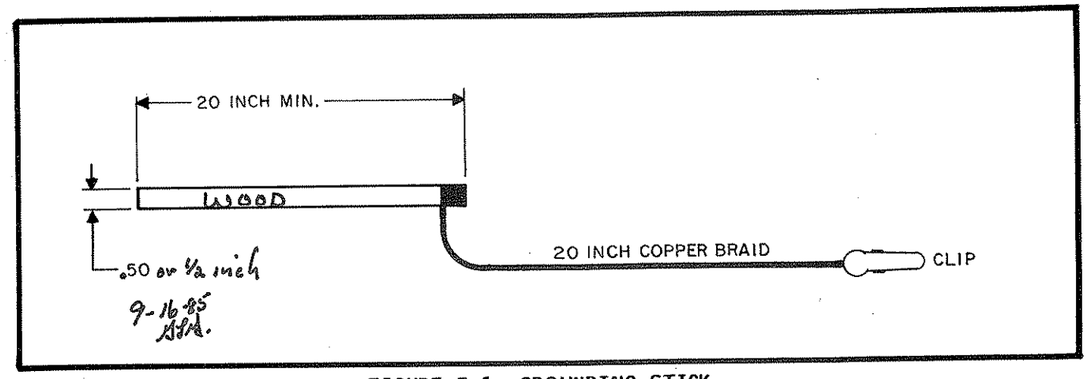

FIGURE 5-1 GROUNDING STICK

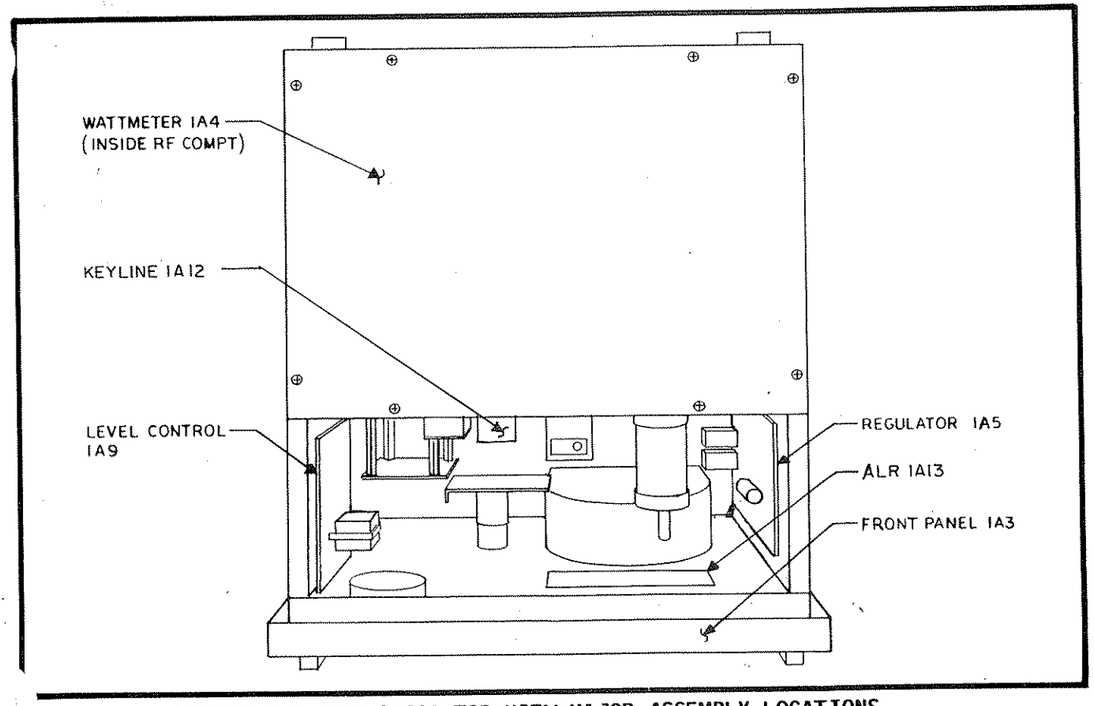

FIGURE 5-2 LPA-1900A TOP VIEW MAJOR ASSEMBLY LOCATIONS

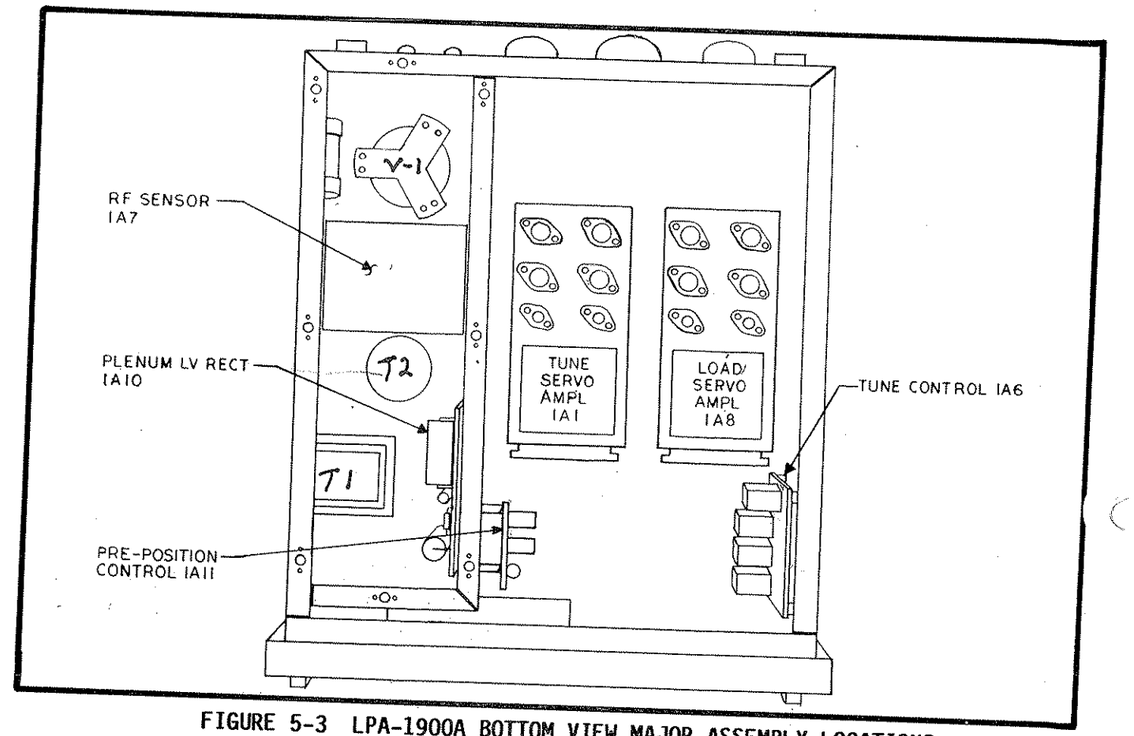

FIGURE 5-3 LPA-1900A BOTTOM VIEW MAJOR ASSEMBLY LOCATIONS

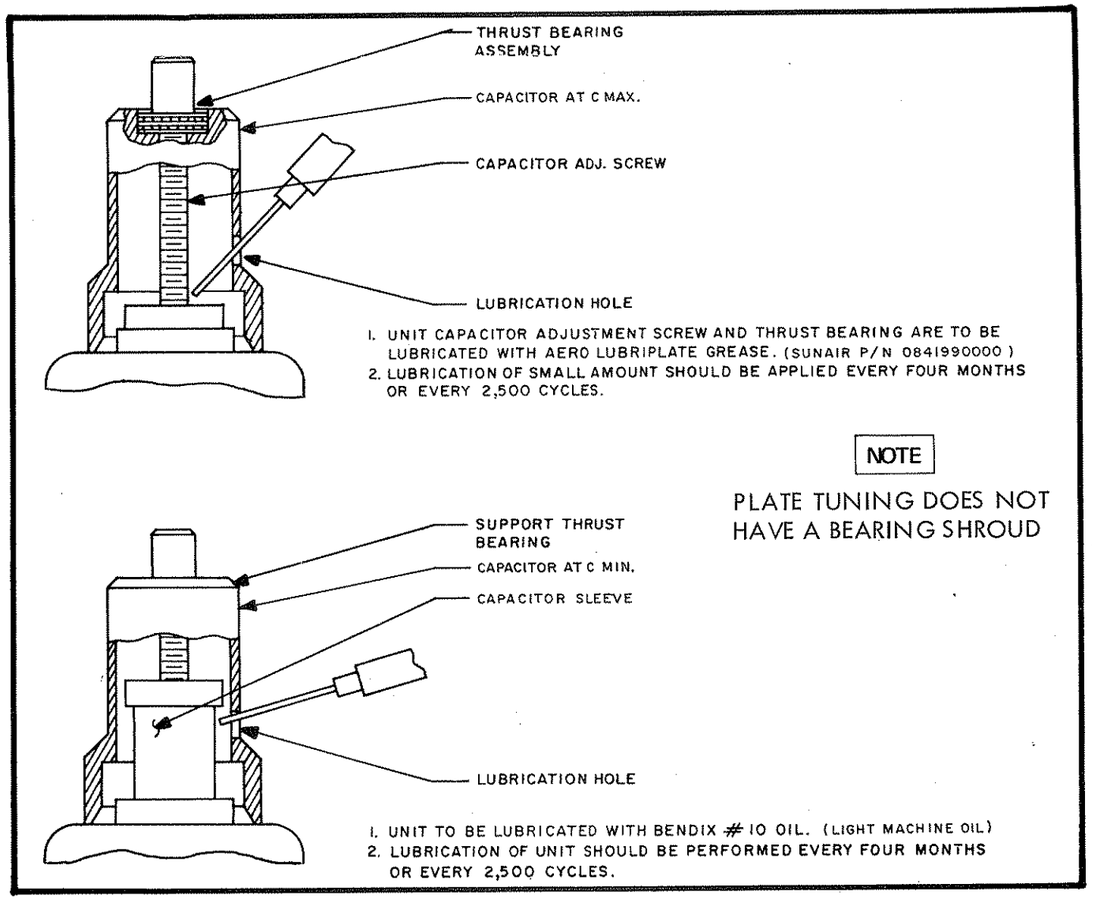

FIGURE 5-4 VACUUM VARIABLE CAPACITOR LUBRICATION POINTS

Not clear need work with Bench techn. to learn how to do 8/2/85.

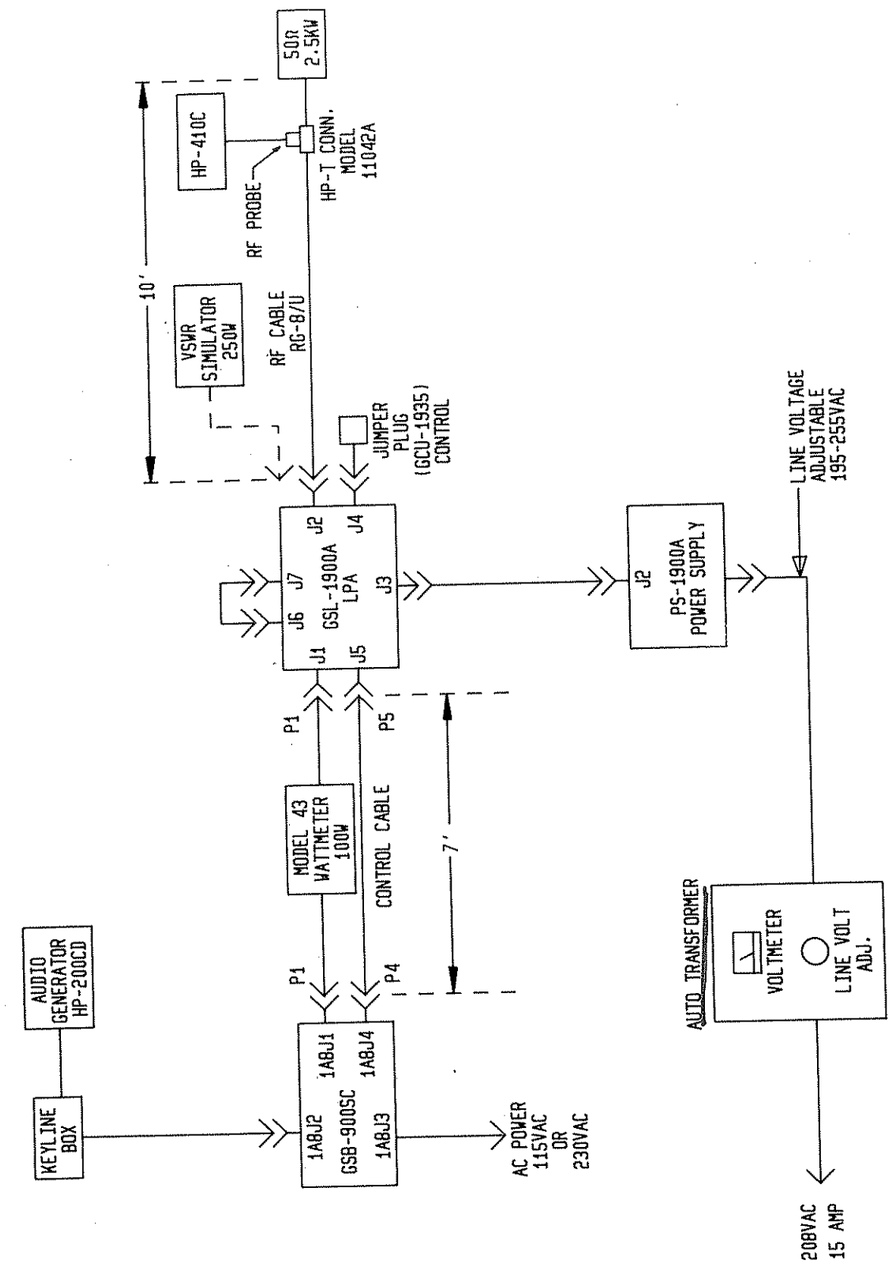

FIGURE 5-5 SYSTEM TEST BLOCK DIAGRAM

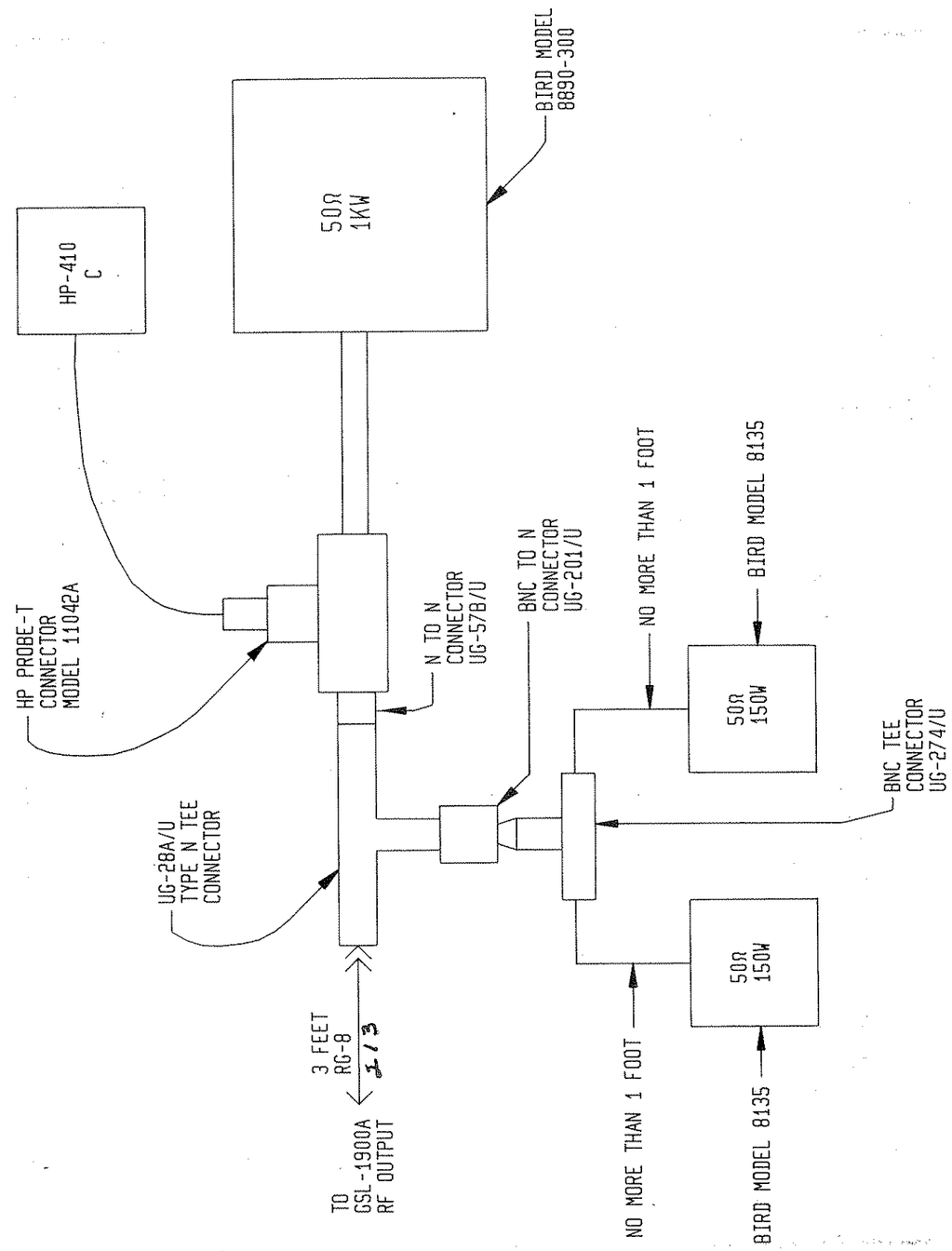

FIGURE 5-6 VSWR TEST SETUP

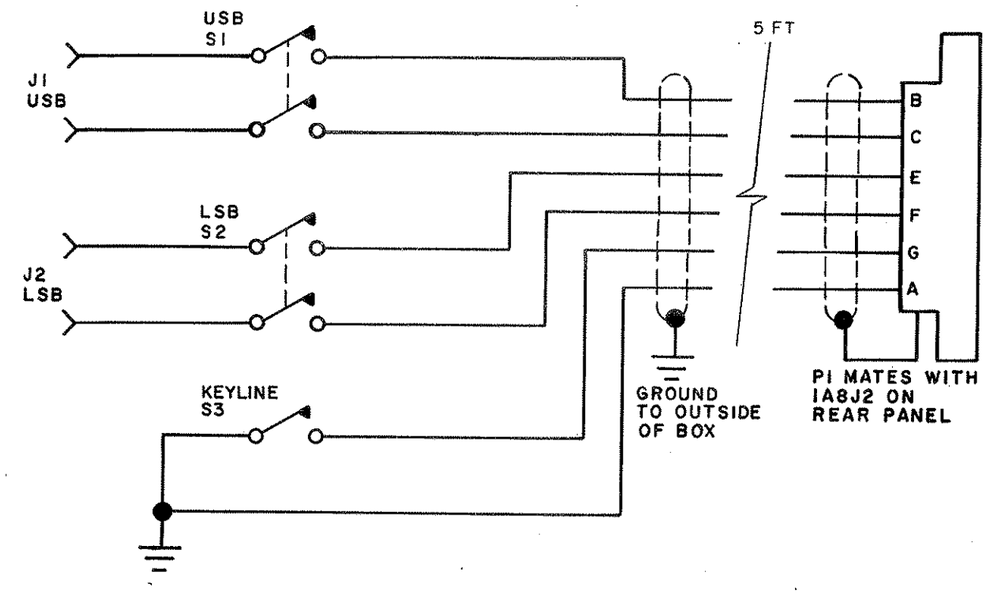

ITEM	REQD	PART NUMBER	DESCRIPTION
	5FT	0604710003	CABLE 7 CONDUCTOR #24
	1	OUTSIDE BUY	BUD BOX CU-3004-A
J1,J2	2	OUTSIDE BUY	BANANA Jack
S1,S2	2	0346270006	D.P.DT TOGGLE SW
S3	1	0346250005	S.P.S.T. TOGGLE SW
	1	0700550046	BUSHING, TELESCOPING
	1	0740250001	CLAMP, CABLE CONNECTOR
P1	1	0754000001	Connector, 10 pin

FIGURE 5-7 KEYLINE/AUDIO CONTROL BOX

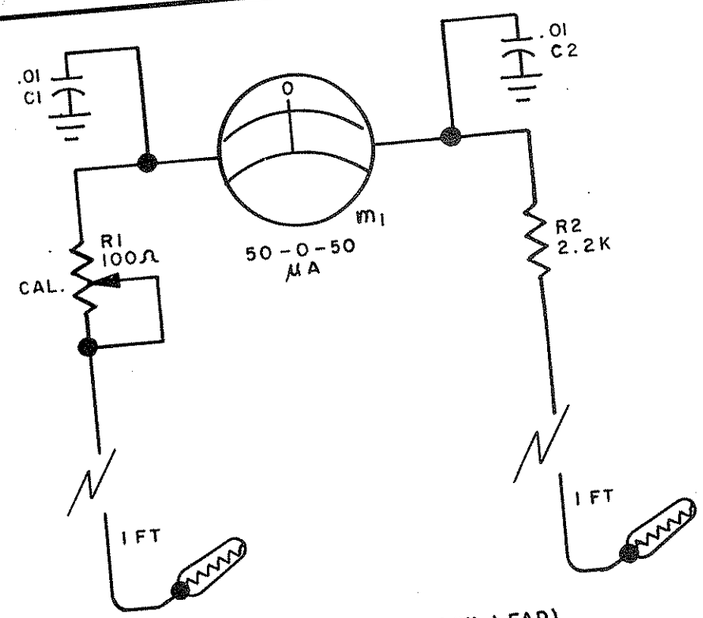

ALLIGATOR CLIP (EACH LEAD)
AND
SLIP ON INSULATOR

CALIBRATION
Set R1 for 1 VDC
Full Scale

Qty.	PART NUMBER	DESCRIPTION
1	ALLIED ST.#701-0309	4½" 50-050 ua METER
2	0273210009	.01 uf @100V DISC
1	0338490051	100K 15 TURNS
1	0167360001	2.2K ½ WATT
2	60 SERIES ALLIED	ALLIGATOR CLIP
2	TYPE 62 ALLIED	SLIP ON INSULATOR
1	BUD BOX CU-3007A	BUD MINI BOX 6x5x4
2.5 FT	TYPE 1632 ALLIED	RED RUBBER JACKET TEST WIRE

FIGURE 5-8 ZERO CENTER METER

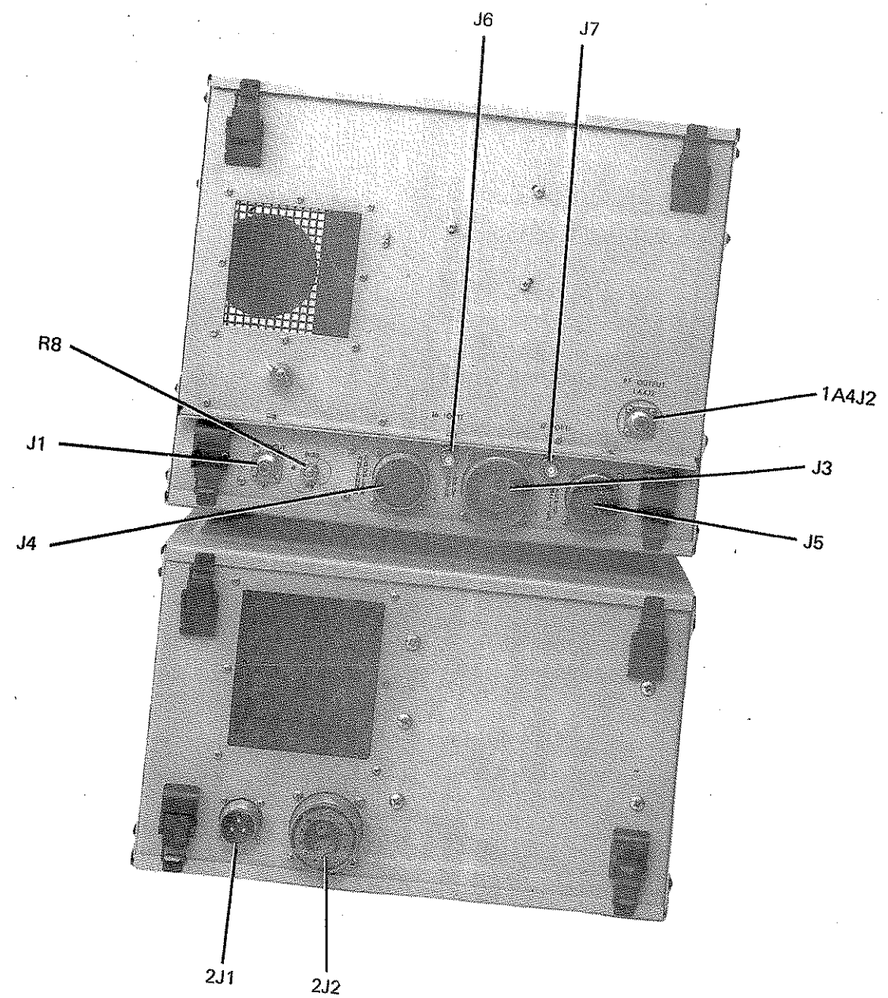

FIGURE 5-9 GSL-1900A REAR VIEW

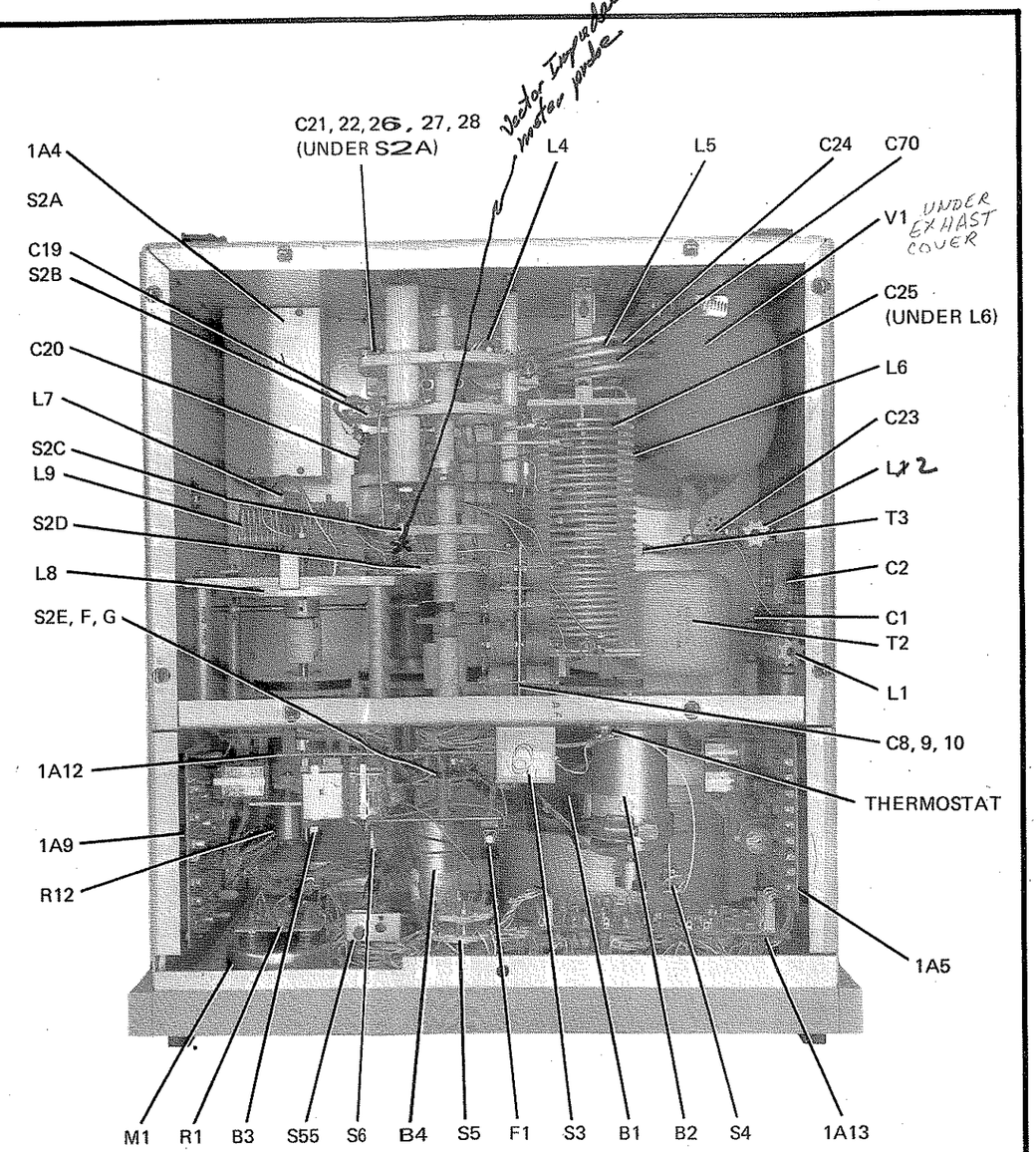

FIGURE 5-10 RF AMPLIFIER COMPONENT LOCATIONS, TOP VIEW

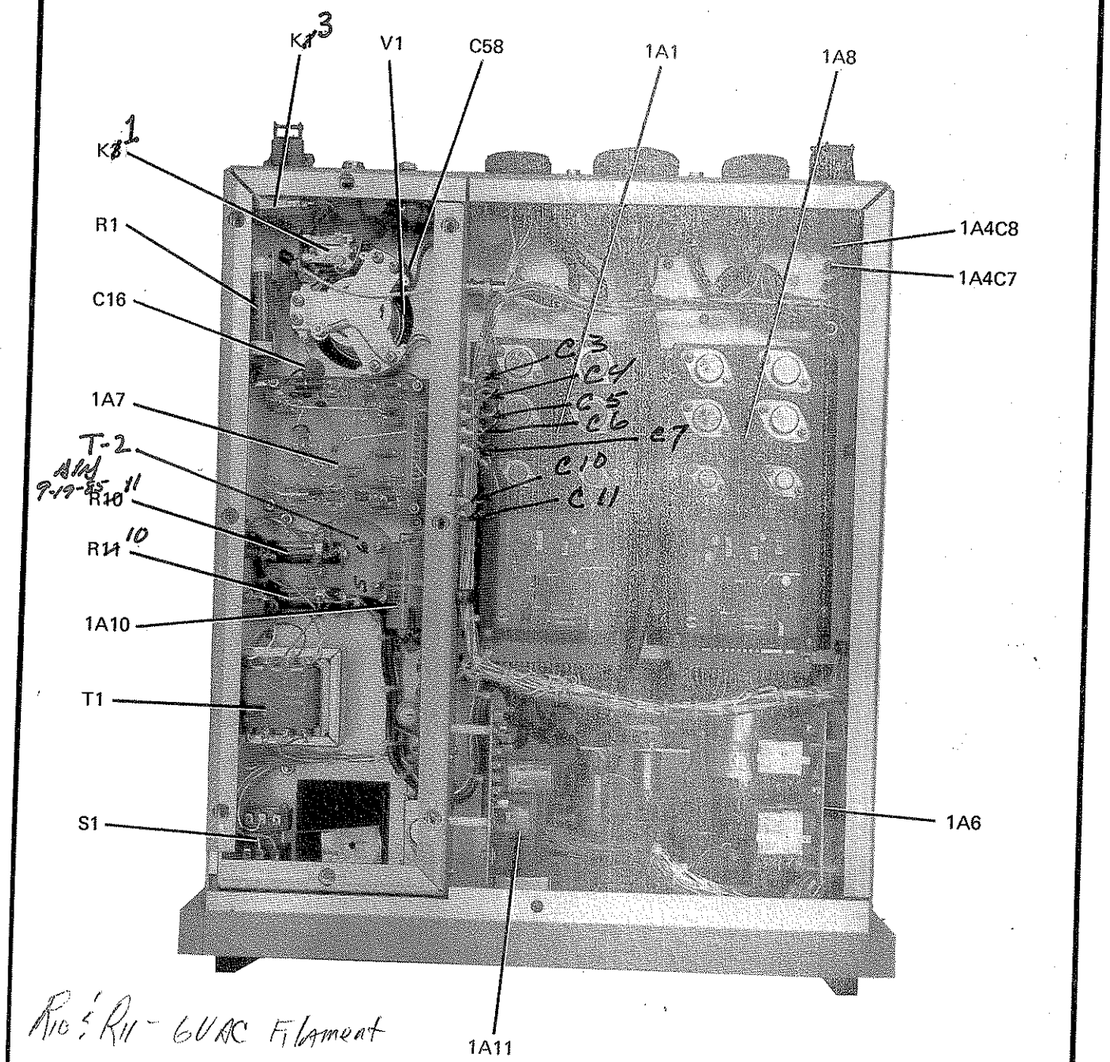

R10 & R11 - 6VAC Filament

FIGURE 5-11 RF AMPLIFIER COMPONENT LOCATIONS, BOTTOM VIEW

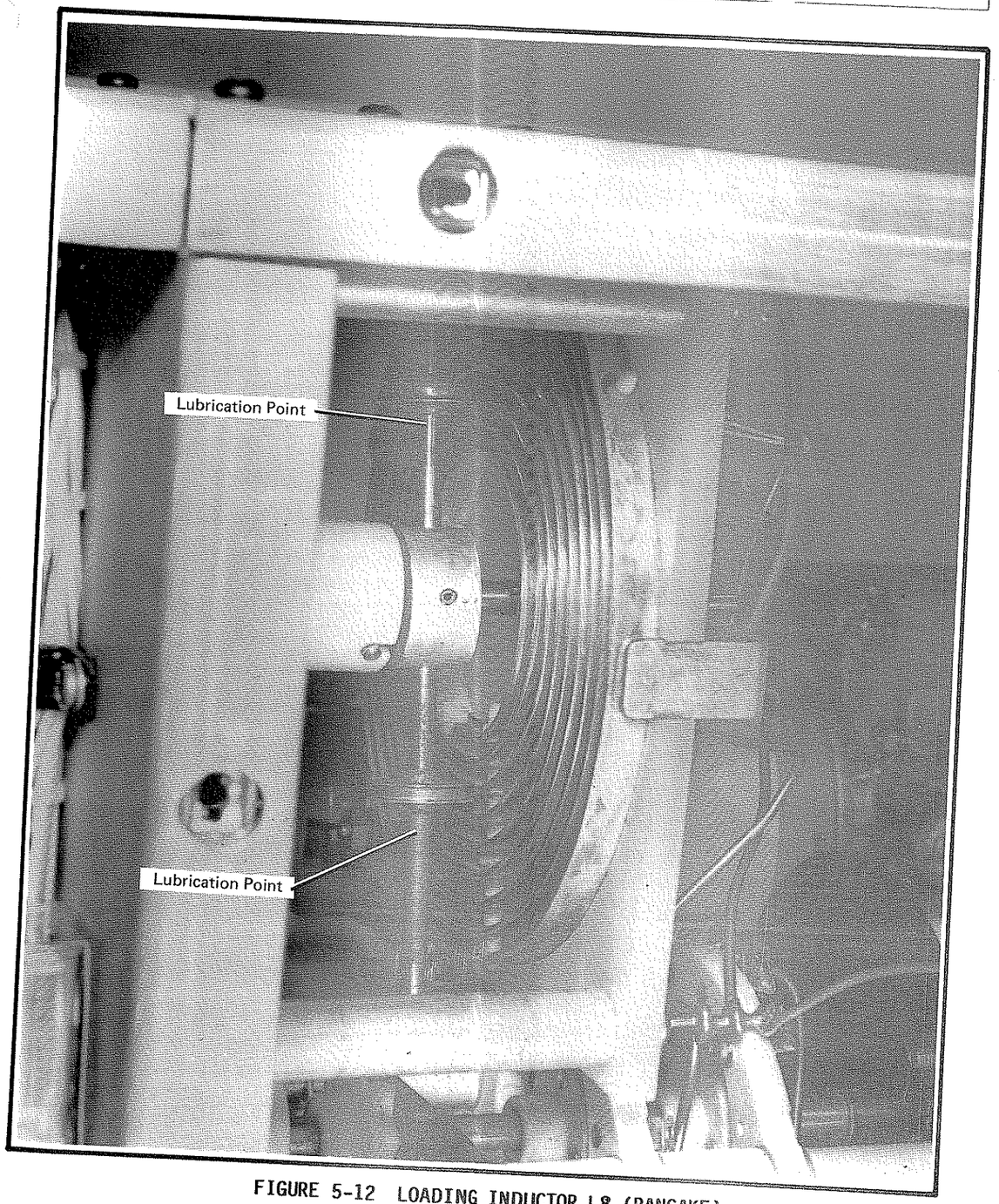

FIGURE 5-12 LOADING INDUCTOR L8 (PANCAKE)

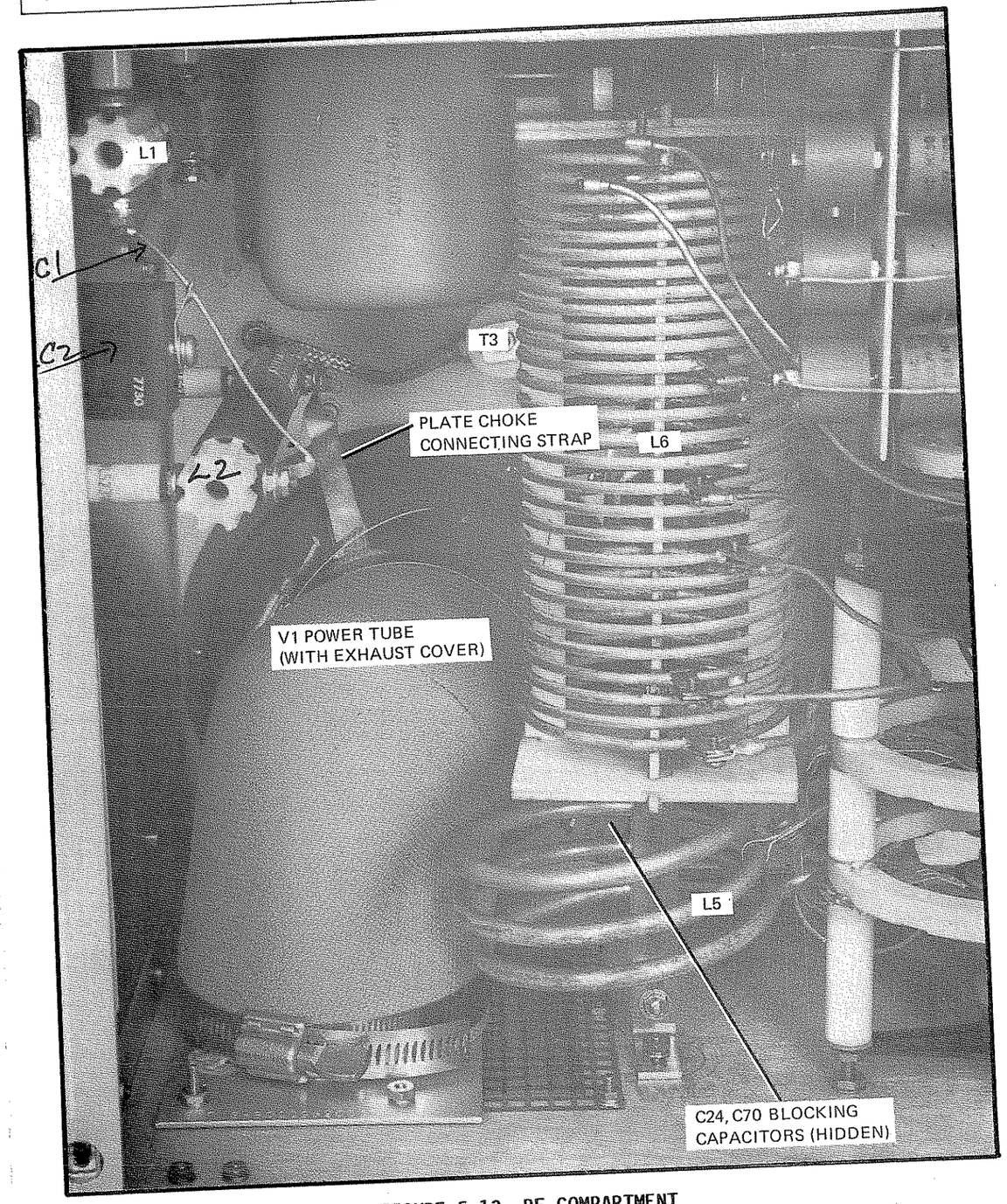

FIGURE 5-13 RF COMPARTMENT

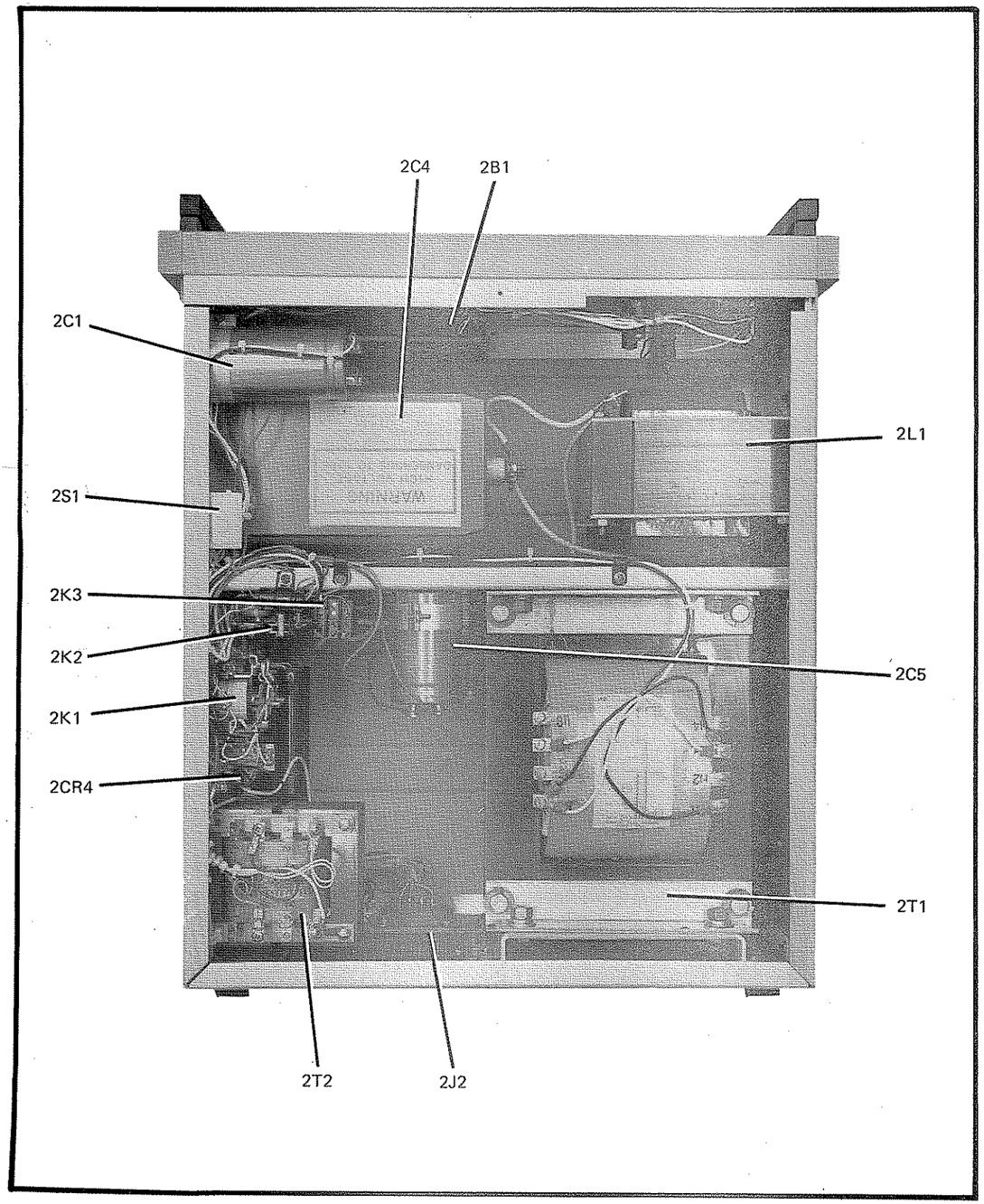

FIGURE 5-14 PS-1900A POWER SUPPLY, TOP VIEW

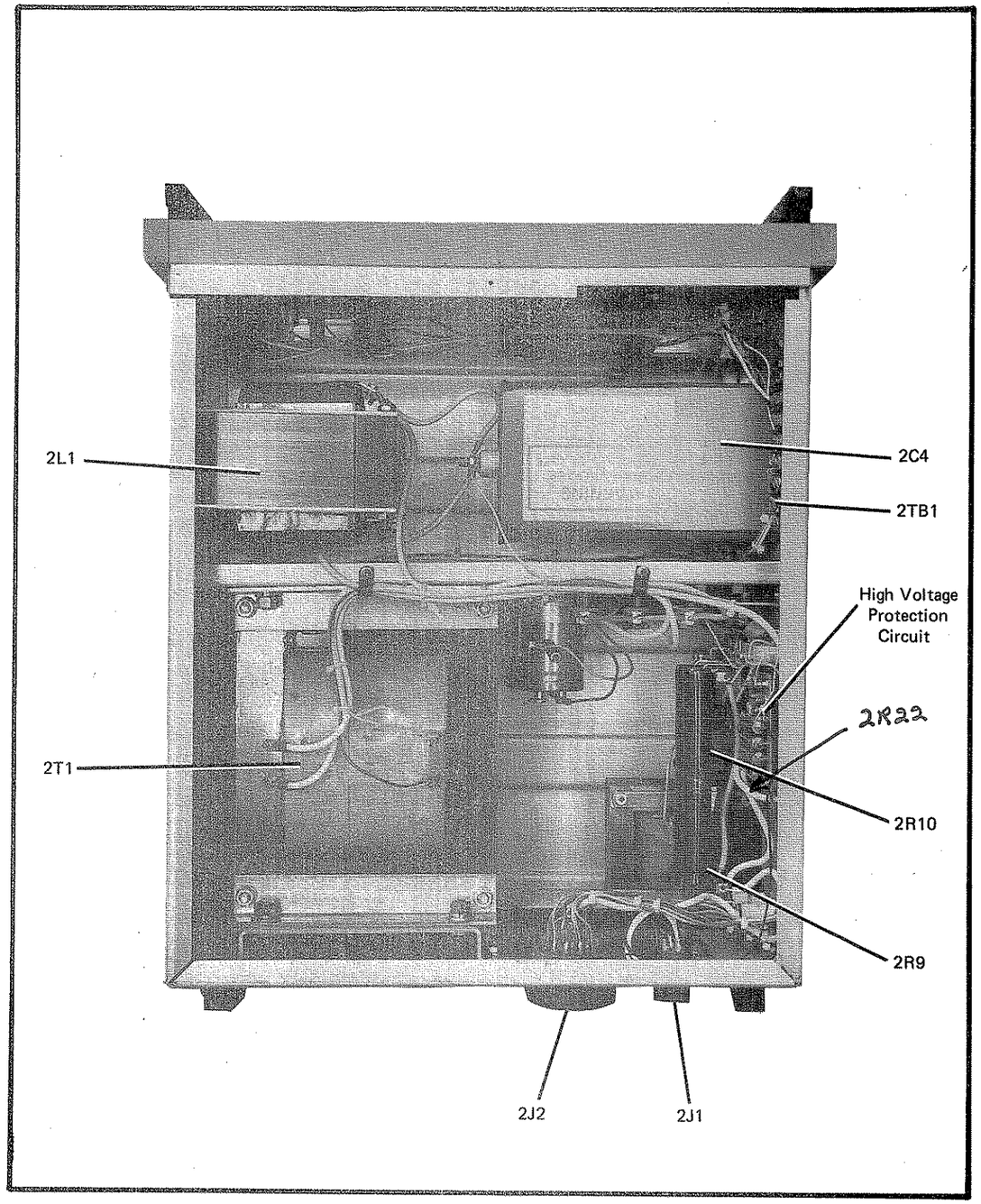

FIGURE 5-15 PS-1900A POWER SUPPLY, BOTTOM VIEW

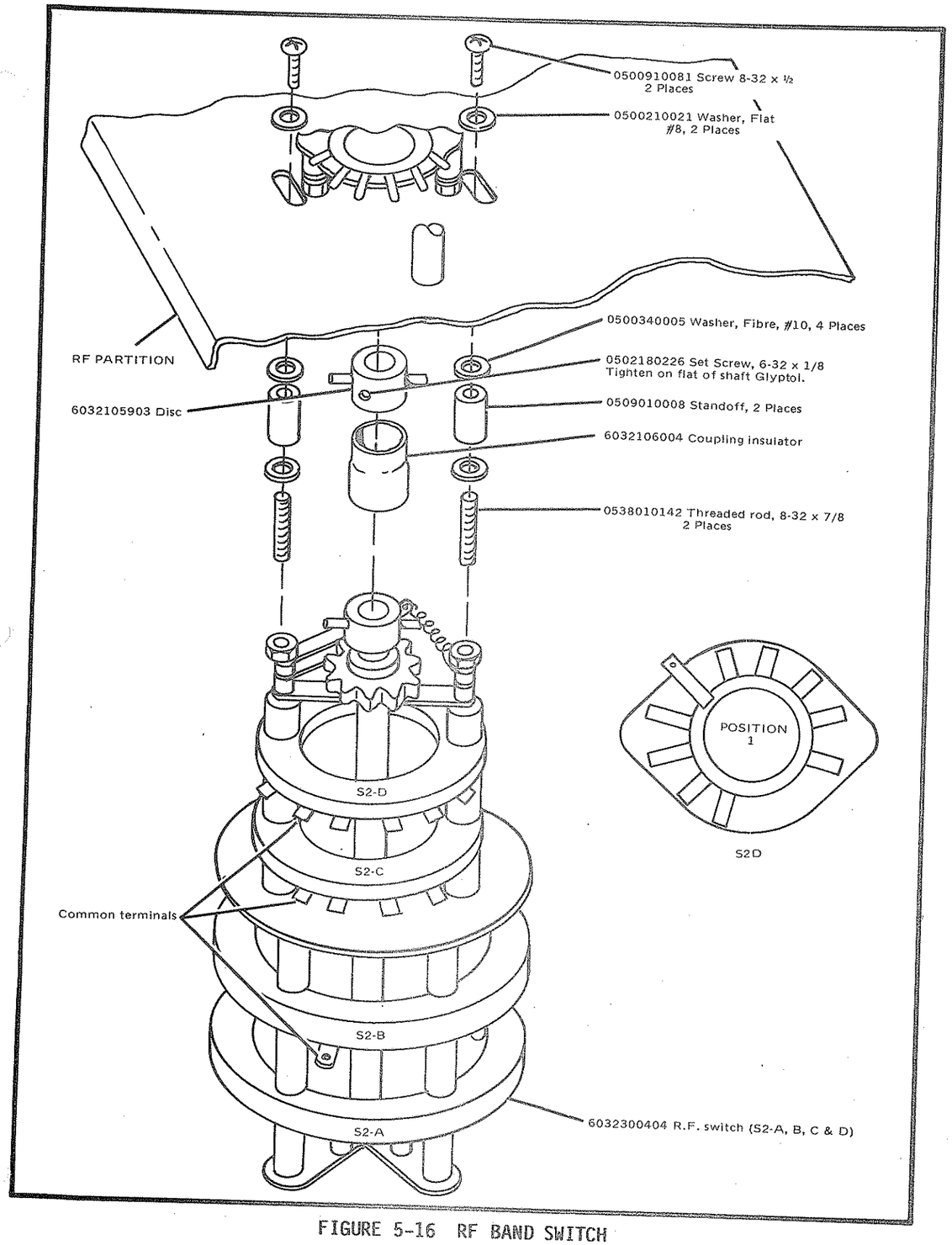

FIGURE 5-16 RF BAND SWITCH

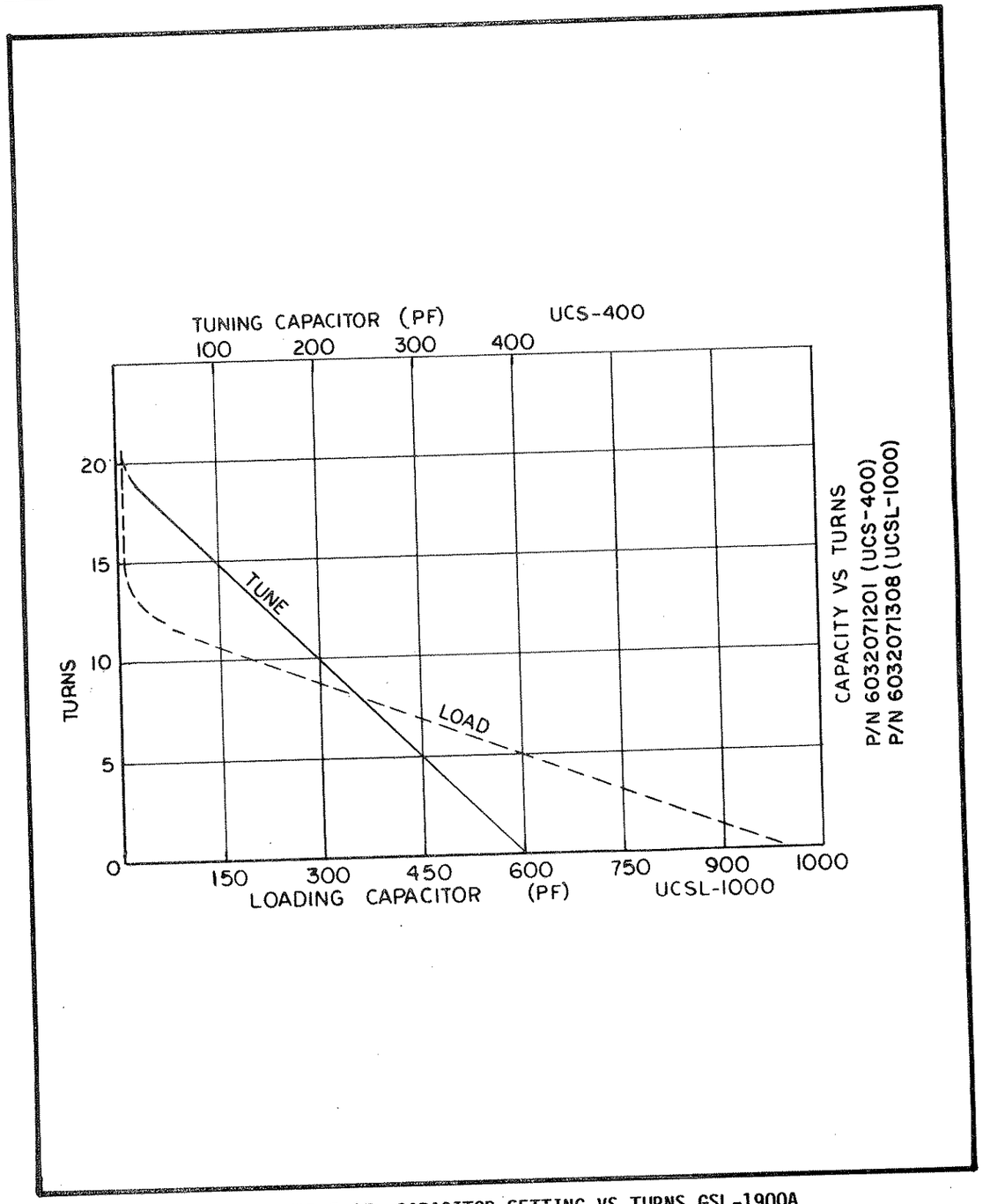

FIGURE 5-17 CAPACITOR SETTING VS TURNS GSL-1900A

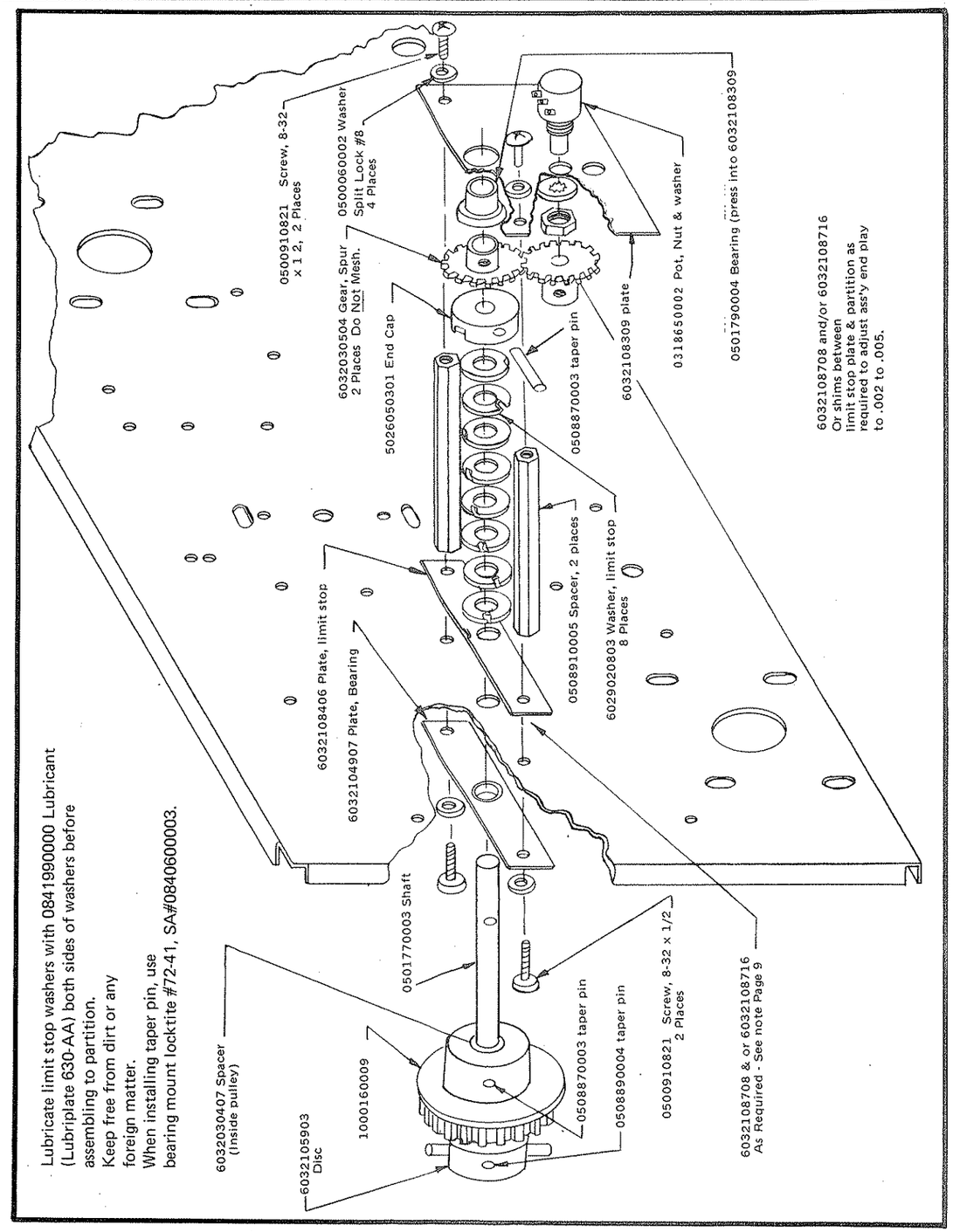

FIGURE 5-18 LOAD LIMIT STOP ASSEMBLY

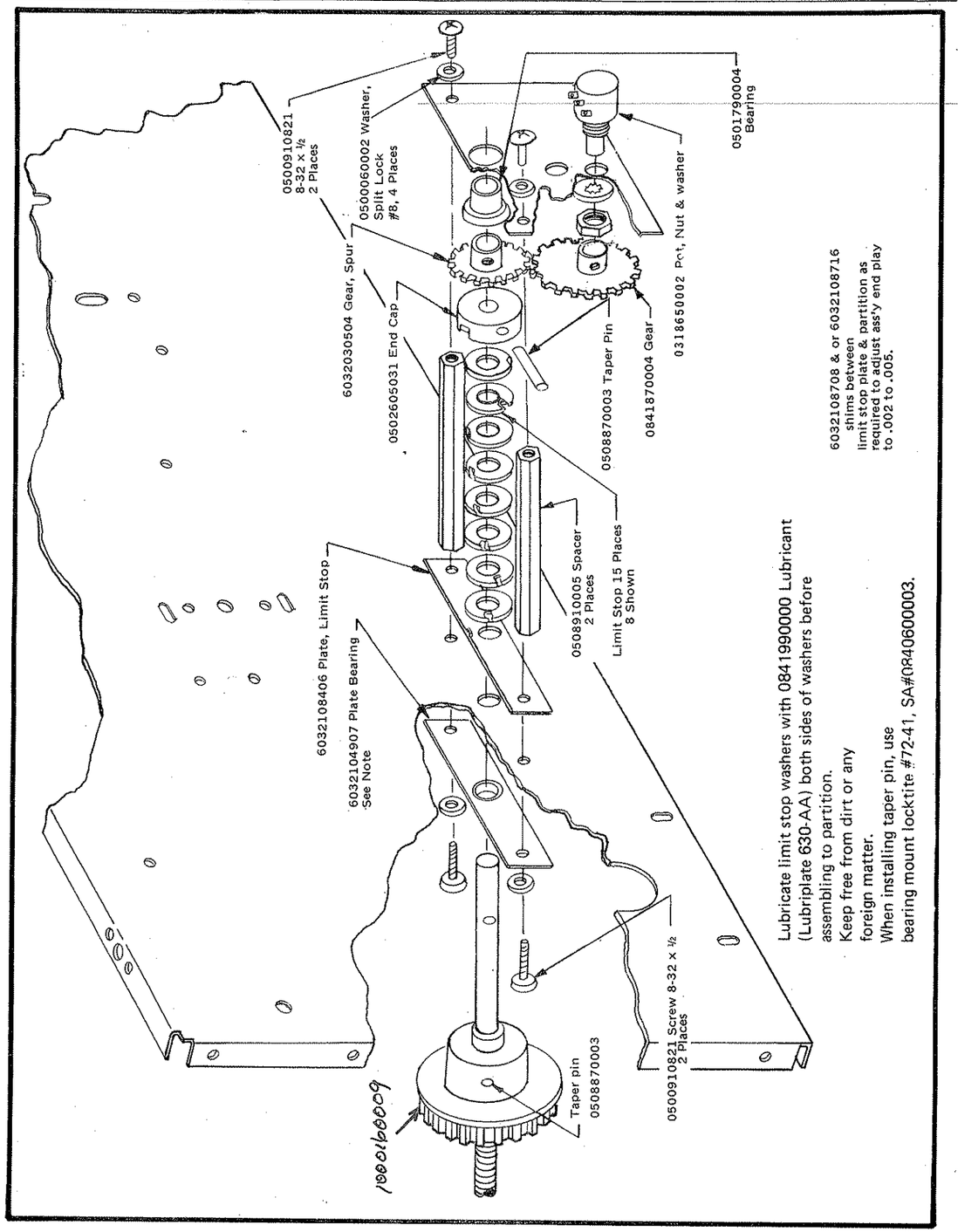

FIGURE 5-19 TUNE DRIVE LIMIT STOP ASSEMBLY

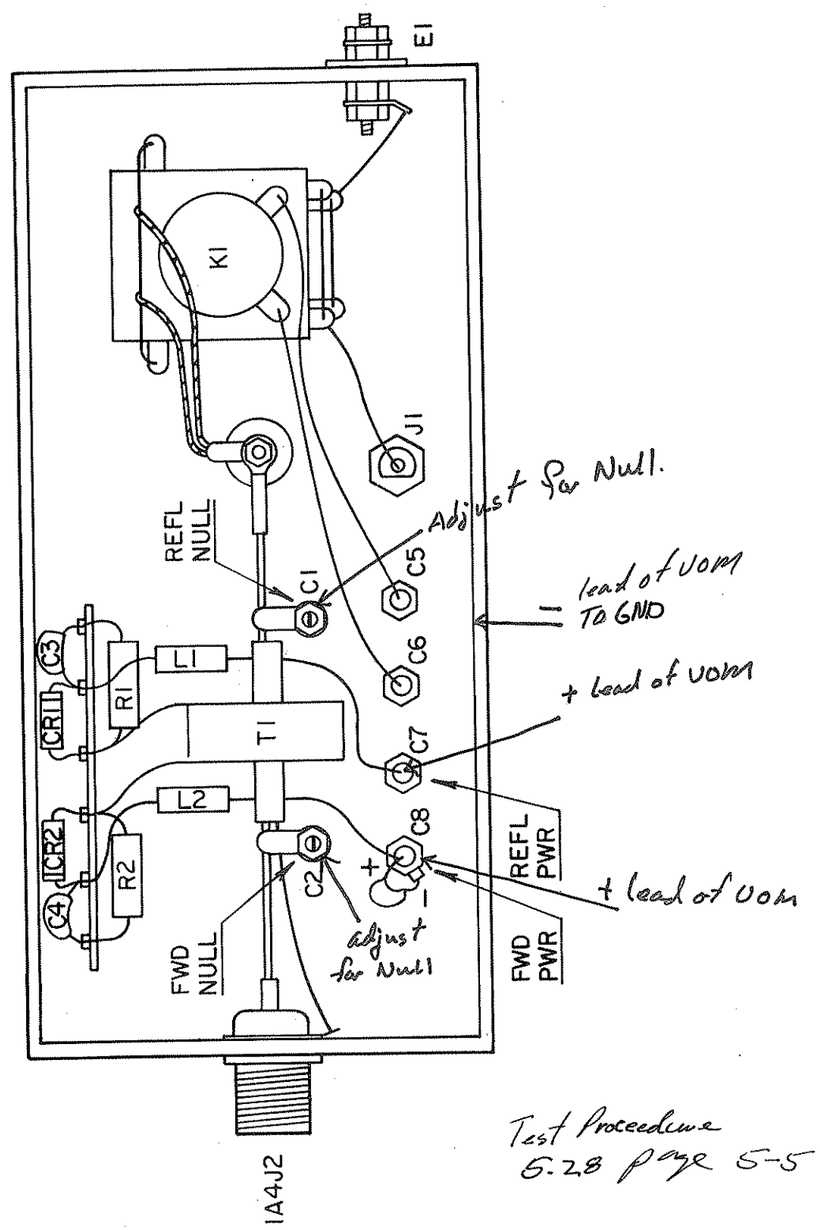

FIGURE 5-20 WATTMETER COMPONENT LOCATIONS

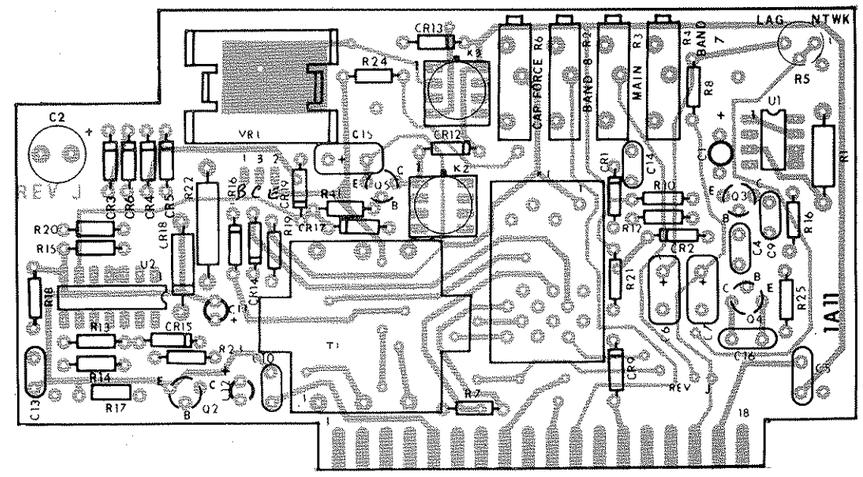

COMPONENT VIEW

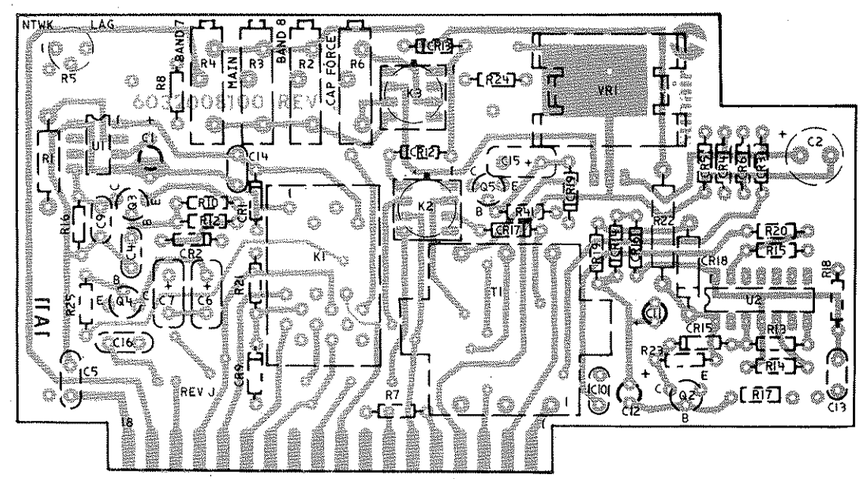

SOLDER VIEW

FIGURE 5-21 PRE-POSITION POT WIPER LOCATIONS

STEP	CONTROL SETTINGS & INSTRUCTIONS	NORMAL INDICATIONS	IF INDICATION IS ABNORMAL
5A	Set exciter to frequency. Set exciter mode selector to KW TUNE. If Coupler GCU-1935, is used set 50 ohm load switch, S6, to ON. Test meter selector to: GRID RFV	TUNING lamp lights. (Indicates tune in progress.) At start of cycle test meter indicates 30V peak.	FAULT lamp, instead of TUNING lamp. Indicates tune fault timer did not trigger. Reset exciter mode switch, then check 1A6U1. Check ACC circuit.
5B	As in step 5A. (First event in tune cycle.)	Servo motors run to preposition tuning elements.	Check for KW TUNE ground from exciter to 1A11U1. Check 1A11K1 and Associated Circuits.
5C	As in step 5A. (Second event in tune cycle.) Test meter selector to PLATE RFV.	Plate tunes. After 1 sec 1A9U2 releases 1A9K1. Test meter indicates 300-500V peak.	Check servo enable ground to 1A1J1-F. Check for error signal at 1A1J1-J. Check Ø Discr. 1A7. Check continuity of error signal through 1A11K1.
5D	As in step 5A. (Third event in tune cycle.) Test meter selector to: PLATE CUR	After TUNE motor stops and 1A9K1 opens, load adjusts. Test meter indicates 500-600 ma then drops to 400 ma.	Check servo enable ground to 1A8J1-F. Check for load error signal at 1A9TP1 and 1A8J1-J. Check loading comparator, 1A7 and 1A9. Check load inductor contact wheels.
5E	As in step 5A. (Final event in tune cycle.) Test meter selector to: FWD PWR.	READY lamp lights after 3 sec w/o Coupler, 10 sec with Coupler. Keyline opens. Test meter indicates 200 watts until keyline opens.	Check 1A6Q1/K2, tune power circuit. Check TUNE LEVEL adjustment, 1A9R2.
6	Place exciter mode selector in AM position and close keyline. Test meter selector to: FWD PWR.	GSL-1900A Keys. Test meter indicates 300 - 400W.	Check ACC Level adjustment, 1A9R1.
7	Place exciter mode selector in CW position and close keyline. Test meter selector to FWD PWR.	GSL-1900A Keys. Test meter indicates 1000W ± 1DB.	Check ALC circuit and ALC adjustment, 1A13R21.

TABLE 5-4 TROUBLESHOOTING (Cont'd)

VRMS	VPEAK	V P TO P	WATTS ACROSS 50 OHMS
5.0	7.1	14.14	0.500
6.0	8.5	16.97	0.720
7.0	9.9	19.80	0.980
8.0	11.3	22.62	1.280
9.0	12.7	25.45	1.620
10.0	14.1	28.28	2.000
14.0	19.8	39.59	3.920
15.0	21.2	42.42	4.500
16.0	22.6	45.25	5.120
20.0	28.3	56.56	8.000
25.0	35.3	70.70	12.500
30.0	42.4	84.84	18.000
35.0	49.5	98.98	24.500
40.0	56.6	113.12	32.000
45.0	63.6	127.26	40.500
50.0	70.7	141.40	50.000
55.0	77.8	155.54	60.500
60.0	84.8	169.68	72.000
65.0	91.9	183.82	84.500
70.0	99.0	197.96	98.000
71.0	100.4	200.79	100.820
72.0	101.8	203.62	103.680
73.0	103.2	206.44	106.580
74.0	104.6	209.27	109.520
75.0	106.0	212.10	112.500
80.0	113.1	226.24	128.000
85.0	120.2	240.38	144.500
90.0	127.3	254.52	162.000
95.0	134.3	268.66	180.500
100.0	141.4	282.80	200.000
105.0	148.5	296.94	220.500
110.0	155.5	311.08	242.000
120.0	169.7	339.36	288.000
130.0	183.8	367.64	338.000
140.0	198.0	395.92	392.000
150.0	212.1	424.20	450.000
158.0	223.4	446.82	499.280
159.0	224.8	449.65	505.620
160.0	226.2	452.48	512.000
170.0	240.4	480.76	578.000
180.0	254.5	509.04	648.000
190.0	268.7	537.32	722.000
200.0	282.8	565.60	800.000
205.0	289.9	579.74	840.500
210.0	296.9	593.88	882.000
215.0	304.0	633.45	924.500
220.0	311.1	622.16	968.000
221.0	312.5	624.99	976.820
222.0	313.9	627.82	985.680
223.0	315.3	630.64	994.580
224.0	316.7	633.47	1003.520
225.0	318.1	636.30	1012.500

TABLE 5-5 POWER VS VOLTAGE

STEP	CONTROL SETTINGS & INSTRUCTIONS	NORMAL INDICATIONS	IF INDICATION IS ABNORMAL
5A	Set exciter to frequency. Set exciter mode selector to KW TUNE. If Coupler GCU-1935, is used set 50 ohm load switch, S6, to ON. Test meter selector to: GRID RFV	TUNING lamp lights. (Indicates tune in progress.) At start of cycle test meter indicates 30V peak.	FAULT lamp, instead of TUNING lamp. Indicates tune fault timer did not trigger. Reset exciter mode switch, then check 1A6U1. Page 5-69 Check ACC circuit. Page 5-61 and 5-63
5B	As in step 5A. (First event in tune cycle.)	Servo motors run to preposition tuning elements.	Page 5-65 Check for KW TUNE ground from exciter to 1A11U1. Check 1A11K1 and Associated Circuits.
5C	As in step 5A. (Second event in tune cycle.) Test meter selector to PLATE RFV.	Plate tunes. After 1 sec 1A9U2 releases 1A9K1. Test meter indicates 300-500V peak.	Check servo enable ground to 1A1J1-F. Check for error signal at 1A1J1-J. Check Ø Discr. 1A7. Check continuity of error signal through 1A11K1.
5D	As in step 5A. (Third event in tune cycle.) Test meter selector to: PLATE CUR	After TUNE motor stops and 1A9K1 opens, load adjusts. Test meter indicates 500-600 ma then drops to 400 ma.	Check servo enable ground to 1A8J1-F. Check for load error signal at 1A9TP1 and 1A8J1-J. Check loading comparator, 1A7 and 1A9. Check load inductor contact wheels.
5E	As in step 5A. (Final event in tune cycle.) Test meter selector to: FWD PWR.	Tune (Green) READY lamp lights after 3 sec w/o Coupler, 10 sec with Coupler. Keyline opens. Test meter indicates 200 watts until keyline opens.	Check 1A6Q1/K2, tune power circuit. Check TUNE LEVEL adjustment, 1A9R2.
6	Place exciter mode selector in AM position and close keyline. Test meter selector to: FWD PWR.	GSL-1900A Keys. Test meter indicates 300 - 400W. Set @ 380 watts.	Check ACC Level adjustment, 1A9R1.
7	Place exciter mode selector in CW position and close keyline. Test meter selector to FWD PWR.	GSL-1900A Keys. Test meter indicates 1000W ± 1DB.	Check ALC circuit and ALC adjustment, 1A13R21.

TABLE 5-4 TROUBLESHOOTING (Cont'd)

VRMS	VPEAK	V P TO P	WATTS ACROSS 50 OHMS	
5.0	7.1	14.14	0.500	
6.0	8.5	16.97	0.720	
7.0	9.9	19.80	0.980	
8.0	11.3	22.62	1.280	
9.0	12.7	25.45	1.620	
10.0	14.1	28.28	2.000	
14.0	19.8	39.59	3.920	
15.0	21.2	42.42	4.500	
16.0	22.6	45.25	5.120	
20.0	28.3	56.56	8.000	
25.0	35.3	70.70	12.500	
30.0	42.4	84.84	18.000	
35.0	49.5	98.98	24.500	
40.0 42v	56.6	113.12 125v	32.000	AM
45.0	63.6	127.26	40.500	
50.0	70.7	141.40	50.000	
55.0	77.8	155.54	60.500	
60.0	84.8	169.68	72.000	
65.0	91.9	183.82	84.500	
70.0	99.0	197.96	98.000	
71.0	100.4	200.79	100.820	CW
72.0	101.8	203.62	103.680	
73.0	103.2	206.44	106.580	
74.0	104.6	209.27	109.520	
75.0	106.0	212.10	112.500	
80.0	113.1	226.24	128.000	
85.0	120.2	240.38	144.500	
90.0	127.3	254.52	162.000	
95.0	134.3	268.66	180.500	
100.0	141.4	282.80	200.000	Tune Power
105.0	148.5	296.94	220.500	
110.0	155.5	311.08	242.000	
120.0	169.7	339.36	288.000	
130.0	183.8	367.64	338.000	
140.0	198.0	395.92	392.000	
150.0	212.1	424.20	450.000	
158.0	223.4	446.82	499.280	
159.0	224.8	449.65	505.620	
160.0	226.2	452.48	512.000	
170.0	240.4	480.76	578.000	
180.0	254.5	509.04	648.000	
190.0	268.7	537.32	722.000	
200.0	282.8	565.60	800.000	
205.0	289.9	579.74	840.500	
210.0	296.9	593.88	882.000	
215.0	304.0	633.45	924.500	
220.0	311.1	622.16	968.000	
221.0	312.5	624.99	976.820	
222.0	313.9	627.82	985.680	
223.0	315.3	630.64	994.580	CW
224.0	316.7	633.47	1003.520	
225.0	318.1	636.30	1012.500	

TABLE 5-5 POWER VS VOLTAGE

TABLE 5.6

TABLE OF ASSEMBLIES LPA-1900A

1A1	Servo Control Amplifier	6029080091
1A2	Remote Control Panel	60324000XX
1A3	Front Panel	60320110XX
1A4	RF Wattmeter Assembly	6032020096
1A5	Regulator Board	6032003094
1A6	Tune Control Board	6032004091
1A7	RF Sensor Board	6032005097
1A8	Servo Control Amplifier	6029080091
1A9	Level Control Board	6032006590
1A10	Low Voltage Rectifier	6032009092
1A11	Pre-Position Board	6032008096
1A12	Keyline Sequencer	6032013090
1A13	ALR Board	6032080498

TABLE 5-6 TABLE OF ASSEMBLIES, LPA-1900A

IA7 Contains (Located in Grid Plenum
1. Phase Detector — Theory of OP P 4-12
2. ACC Detector
3. Loading Comparator
Plate Sample Detector
4. Loading Comparator
Grid Sample Detector
5. Grid Voltmeter Drive
6. Plate Voltmeter Drive

TT L output Network
C25 Tuning Cap
L4, L5, L6 Tuning inductors
C20 Loading Cap.
L8, L9 Loading inductor.
} attenuates Harmonics and match Tube Z (1900Ω) to 50Ω Transmission line.

SUNAIR GSL-1900A

Theory of OP P 4-4
Contains
1. FWD and REFL POWER DETECTORS.

6032100073AC

C24 & C70 Blocking caps
Tuning
Ratio of C20 to C25 approx. 2.5 $\frac{1000}{400} = 2.5$
Aux Loading Caps See on page 4-3

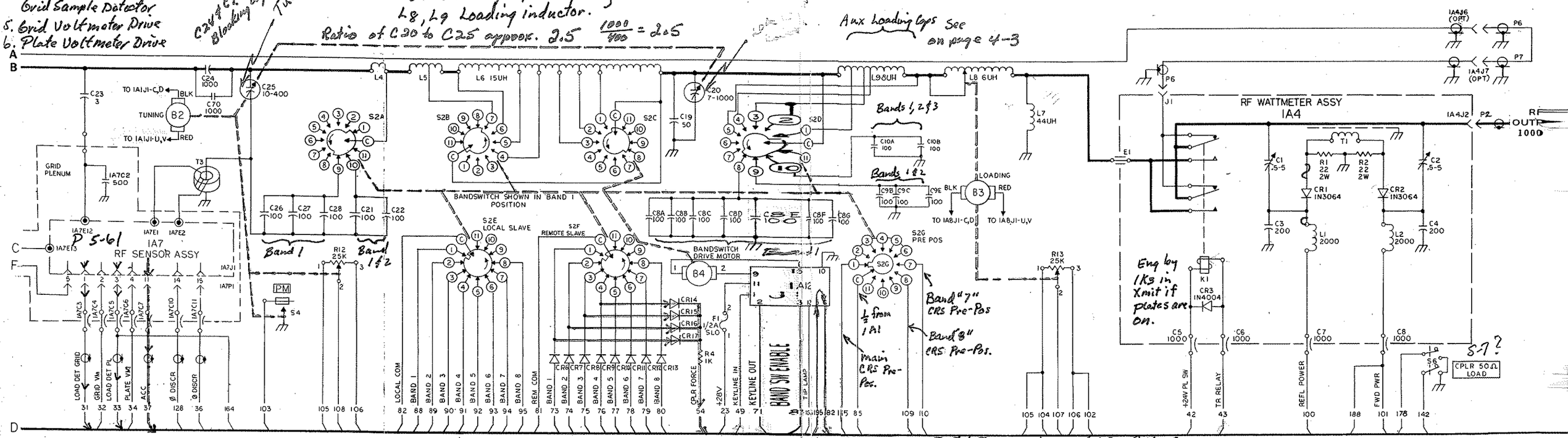

IA12 Keyline Sequencer P 5-67 Theory of OP P 4-28
Pos[illegible] to open Keyline and KW Tune Lines
bef[illegible] starting band select motor.

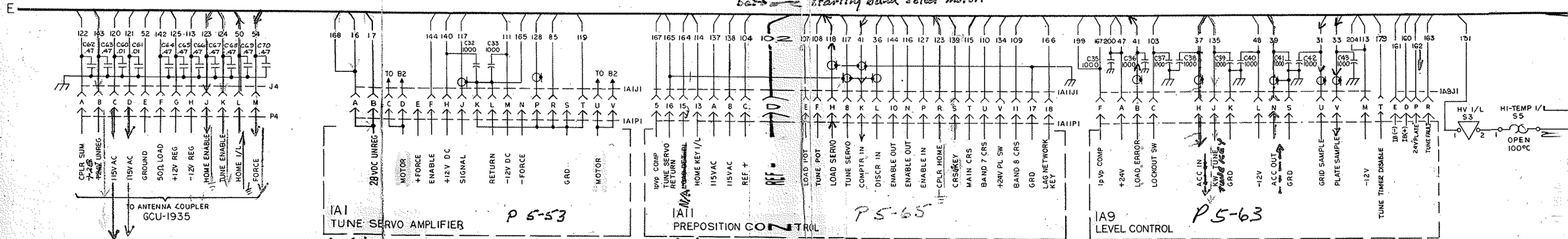

Contains
1. Pre Amp
2. Enable Ckts
3. Signal Diodes
5. Output Power Bridge
Theory of OP P 4-24

Contains
1. Pre Position Timer
2. Pre-Position R.S.
3. Pre-Position and Cap Force
Restrictor Brake Servo Loop
Potentiometer adjustments
Theory of OP P 4-7

Contains
1. ACC control
2. ACC amp
3. Loading Lockout Timer
4. Loading Lockout Relay and Control
Theory of OP P 4-21

FIGURE 5-22 GSL-1900A MAIN SCHEMATIC (SHEET 3 of 3)

TP 5-22C

5. Plate comparator
6. ADL Circuit
7. Loading adjustment

6032015092AD MAIN HARNESS

REF SYMBOL	DESCRIPTION	SUNAIR PART NO.
	MAIN HARNESS GSL-1900A	6032015092
C11	Capacitor, 0.47µf, 50V, X5V, 20%	0283370009
C17	Capacitor, 0.47µf, 50V, X5V, 20%	0283370009
C18	Capacitor, 0.47µf, 50V, X5V, 20%	0283370009
C34	Capacitor, 0.001µf, 1000V, X5R, 10%	0295010002
C35	Capacitor, 0.001µf, 1000V, X5R, 10%	0295010002
C36	Capacitor, 0.001µf, 1000V, X5R, 10%	0295010002
C37	Capacitor, 0.001µf, 1000V, X5R, 10%	0295010002
C38	Capacitor, 0.001µf, 1000V, X5R, 10%	0295010002
C39	Capacitor, 0.001µf, 1000V, X5R, 10%	0295010002
C40	Capacitor, 0.001µf, 1000V, X5R, 10%	0295010002
C41	Capacitor, 0.001µf, 1000V, X5R, 10%	0295010002
C42	Capacitor, 0.001µf, 1000V, X5R, 10%	0295010002
C43	Capacitor, 0.001µf, 1000V, X5R, 10%	0295010002
C50	Capacitor, 0.1µf, 50V	1001010027
C60	Capacitor, 0.01µf, 1000V, X5P, 10%	0296040002
C61	Capacitor, 0.01µf, 1000V, X5P, 10%	0296040002
C62	Capacitor, 0.47µf, 50V, X5V, 20%	0283370009
C63	Capacitor, 0.47µf, 50V, X5V, 20%	0283370009
C64	Capacitor, 0.47µf, 50V, X5V, 20%	0283370009
C65	Capacitor, 0.47µf, 50V, X5V, 20%	0283370009
C66	Capacitor, 0.47µf, 50V, X5V, 20%	0283370009
C67	Capacitor, 0.47µf, 50V, X5V, 20%	0283370009
C68	Capacitor, 0.47µf, 50V, X5V, 20%	0283370009
C69	Capacitor, 0.47µf, 50V, X5V, 20%	0283370009
C70	Capacitor, 0.47µf, 50V, X5V, 20%	0283370009
CR1	Diode, Zener 1N5352B	0405110006
J3	Connector, Power, 15 Pin Round	0754200001
J4	Connector, Power, 12 Pin Round	0754350002
J5	Connector, Power, 37 Pin Round	0754310001
R16	Resistor, 1K, 10%, ¼W	0171560001
1A13P1	Molex Plug, 3 Pin	1001020031
1A13P2	Molex Plug, 3 Pin	1001020031
	MISCELLANEOUS	
	Connector, PC, 18 Pin Female	0749720000
	Connector, PC, 15 Pin Female	0754160009
	Pin, Connector, Crimp Male	0754180000
	Connector, PC, 18 Pin Female	0755980000

6032300498B BANDSWITCH ASSY RF

REF SYMBOL	DESCRIPTION	SUNAIR PART NO.
S2A, B,C,D	BANDSWITCH ASSY RF GSL-1900A	6032300498
	Switch, RF	6032300404

6032110095B LIMIT STOP, LOAD DR

REF SYMBOL	DESCRIPTION	SUNAIR PART NO.
	Pulley, Timing, 42 Grooves	1000160009

6032071391C LIMIT STOP, TUNE DR

REF SYMBOL	DESCRIPTION	SUNAIR PART NO.
C20	LIMIT STOP, TUNE DR GSL-1900A	6032071391
	Capacitor, Var, Vacuum 1000pf	6032071308
	Pulley, Timing, 42 Grooves	1000160009

6032071294I C25 ASSY

REF SYMBOL	DESCRIPTION	SUNAIR PART NO.
C25	C25 ASSY GSL-1900A	6032071294
	Capacitor, Var., Vacuum 400pf	6032071201
	Gear, Pulley 28T x ¼ Bore	6032030202

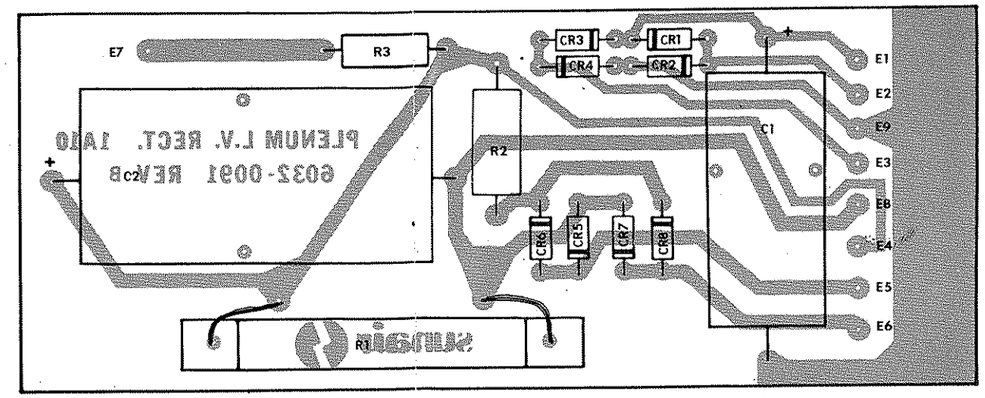

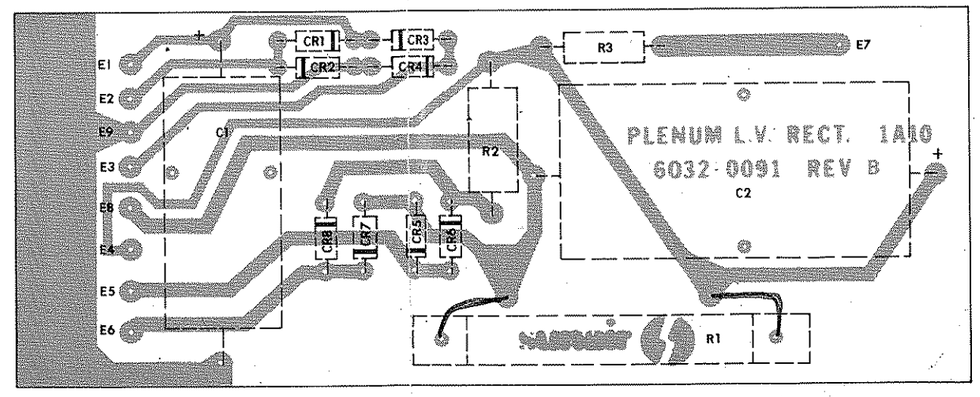

6032012093L PLENUM ASSY 1A10

REF SYMBOL	DESCRIPTION	SUNAIR PART NO.
	PLENUM ASSY GSL-1900	6032012093
C3	Capacitor, 1000pf, 1000V, X5U	0276440005
C4	Capacitor, 1000pf, 1000V, X5U	0276440005
C5	Capacitor, 1000pf, 1000V, X5U	0276440005
C6	Capacitor, 1000pf, 1000V, X5U	0276440005
C7	Capacitor, 1000pf, 1000V, X5U	0276440005
C10	Capacitor, 1000pf, 1000V, X5U	0276440005
C11	Capacitor, 1000pf, 1000V, X5U	0276440005
J2	Connector, RF, BNC, UG-1094/U	0743740009
S1A	Switch, Micro SPDT	6032071600
S1B	Switch, Micro SPDT	6032071600

6029080091L PC ASSY SERVO AMP 1A1, 1A8

REF SYMBOL	DESCRIPTION	SUNAIR PART NO.
	PC ASSY SERVO AMP 1A1, 1A8	6029080091
C1	Capacitor, 0.0056µf, 100V, X5R, 10%	0282720006
C2	Capacitor, 200pf, 500V, DM10, 5%	0293050007
C3	Capacitor, .022µf, 50V Mylar	0297070002
C4	Capacitor, 0.01µf, 200V, Mylar	0271870001
C5	Capacitor, 0.01µf, 200V, Mylar	0271870001
C6	Capacitor, 0.10µf, 100V, Mylar	0272160008
C7	Capacitor, 0.47µf, 50V, X7R, 20%	0283377771
C8	Capacitor, 0.47µf, 50V, X7R, 20%	0283377771
C9	Capacitor, 0.47µf, 50V, X7R, 20%	0283377771
C10	Capacitor, 0.01µf, 25V, X5S	0281620008
C11	Capacitor, 0.001µf, 100V, X5E, 10%	0282080007
C12	Capacitor, 0.01µf, 25V, X5S	0281620008
C13	Capacitor, 0.001µf, 100V, X5E, 10%	0282080007
C14	Capacitor, 0.47µf, 50V, X7R, 20%	0283377771
U1	IC Linear, Op Amp UA709, MC1709	0447330004
CR1	Diode, Signal, Si. 1N914	0442900007
CR2	Diode, Signal, Si. 1N914	0442900007
CR3	Diode, Signal, Si. 1N914	0442900007
CR4	Diode, Signal, Si. 1N914	0442900007
CR5	Diode, Signal, Si. 1N914	0442900007
CR6	Diode, Rectifier 1N4004	0405180004
CR7	Diode, Rectifier 1N4004	0405180004
CR8	Diode, Rectifier 1N4004	0405180004
CR9	Diode, Rectifier 1N4004	0405180004
Q1	Transistor, NPN, Si. 2N1711	0448380005
Q2	Transistor, NPN, Si. 2N1711	0448380005
Q3	Transistor, PNP, Si. 2N2907A	0448390001
Q4	Transistor, NPN, Si. 2N1893	0448350009
Q5	Transistor, PNP, Si. 2N3741	0448360004
Q6	Transistor, PNP, Si. 2N3741	0448360004
Q7	Transistor, NPN, Si. 2N3772	0448370000
Q8	Transistor, NPN, Si. 2N3772	0448370000
Q9	Transistor, NPN, Si. 2N3772	0448370000
Q10	Transistor, NPN, Si. 2N3772	0448370000
R1	Resistor, 2150, 1%, ½W	0193480000
R2	Resistor, 2150, 1%, ½W	0193480000

REF SYMBOL	DESCRIPTION	SUNAIR PART NO.
R3	Resistor, 5.6K, 10%, ¼W	0183060008
R4	Resistor, 1.5K, 10%, ¼W	0172470005
R5	Resistor, 6.8K, 5%, ¼W	0174810008
R6	Resistor, 470K, 10%, ¼W	0180570005
R7	Resistor, 470K, 10%, ¼W	0180570005
R8	Resistor, 470K, 10%, ¼W	0180570005
R9	Resistor, 2.2K, 5%, ¼W	0178070009
R10	Resistor, 68K, 10%, ¼W	0173520006
R11	Resistor, 2.2K, 5%, ¼W	0178070009
R12	Resistor, 2.2K, 5%, ¼W	0178070009
R13	Resistor, 180, 10%, ¼W	0175220000
R14	Resistor, 180, 10%, ¼W	0175220000
R15	Resistor, 4.7K, 5%, ¼W	0170770001
R16	Resistor, 1.2K, 10%, ¼W	0181860007
R17	Resistor, 1K, 10%, ¼W	0171560001
R18	Resistor, 2.7K, 10%, ¼W	0186670001
R19	Resistor, 2.7K, 10%, ¼W	0186670001
R20	Resistor, 330, 10%, ½W	0173380000
R21	Resistor, 330, 10%, ½W	0173380000
R22	Resistor, 220, 10%, 1W	0197190006
R23	Resistor, 220, 10%, 1W	0197190006
R24	Resistor, 100, 10%, 1W	0165540001
R25	Resistor, 100, 10%, 1W	0165540001
R26	Resistor, 47, 10%, 1W	0164990003
R27	Resistor, 0.1, 10%, 15W	0193360004
R28	Potentiometer, 20K, 10%, ¼W, 12 Turns	1002840015
VR1	Diode, Zener 1N5231B	0405390009
XQ1	Mounting Pad, Transistor	0502710004
XQ2	Mounting Pad, Transistor	0502710004
XQ3	Mounting Pad, Transistor	0502720000
XQ4	Mounting Pad, Transistor	0502710004
	MISCELLANEOUS	
	Jack, PCB, Press-In	0754100006
	Jack, PCB, Press-In	0754380009
	Mica Ins. TO-3 Transistor	0440940001

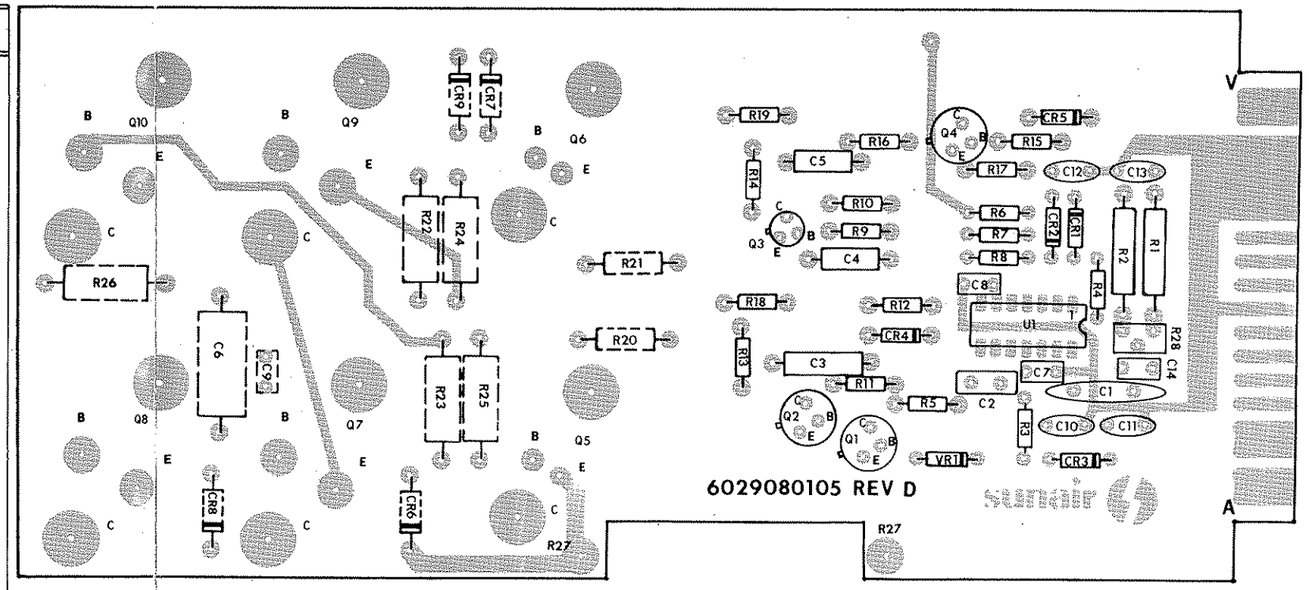

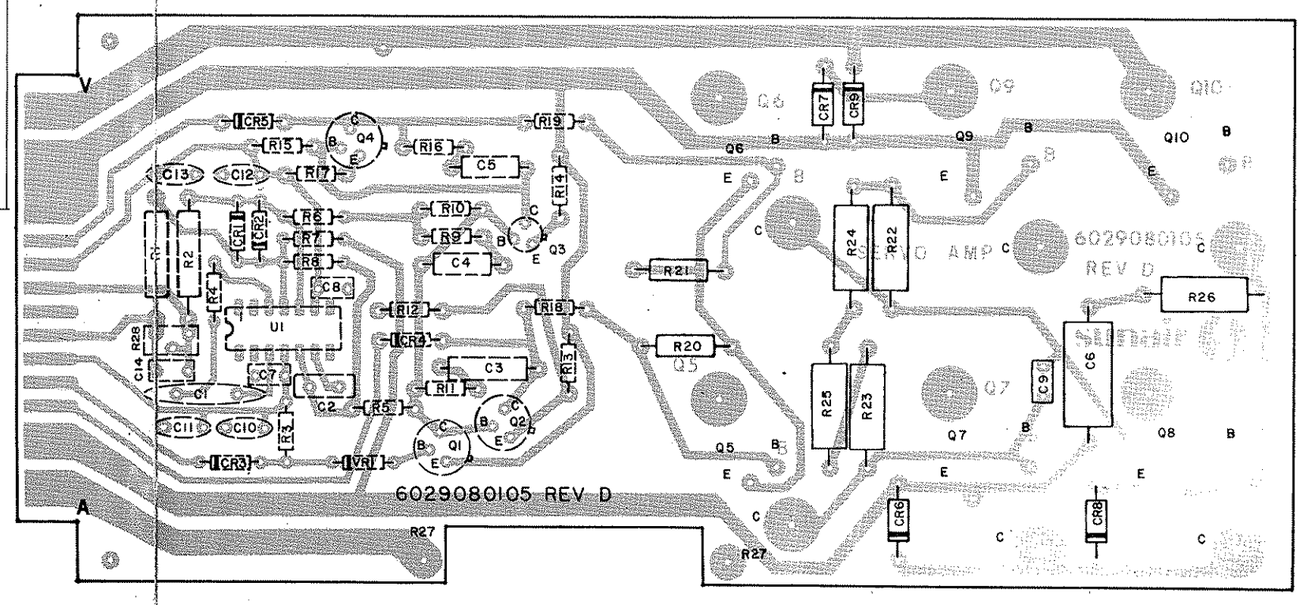

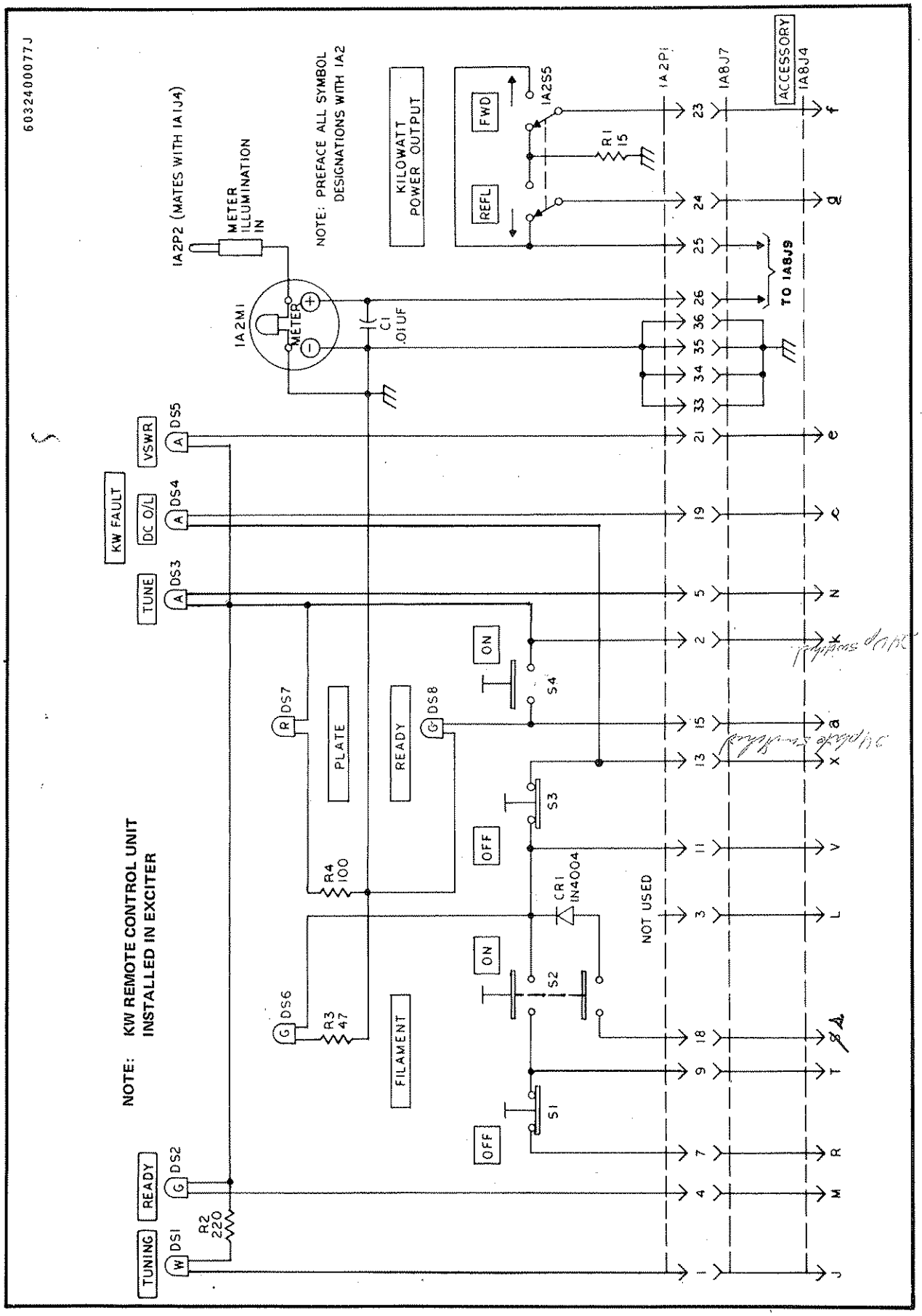

FIGURE 5-24 KW REMOTE CONTROL (1A2) SCHEMATIC In 900 Series Radios

60324000XXP KW CONTROL UNIT 1A2, GSL-1900A

REF SYMBOL	DESCRIPTION	SUNAIR PART NO.
	KW CONTROL UNIT 1A2	60324000XX
C1	Capacitor, 0.01µf, 1000V, Z5U, 20%	0243550006
CR1	Diode, Rectifier 1N4004	0405180004
DS1	Lamp assy Wht Incandescent	6032072401
DS2	Lamp Assy Grn Incandescent	6032072100
DS3	Lamp Assy Amber Incandescent	6032072207
DS4	Lamp Assy Amber Incandescent	6032072207
DS5	Lamp Assy Amber Incandescent	6032072207
DS6	Lamp Assy Grn Incandescent	6032072100
DS7	Lamp Assy Red Incandescent	6032072304
DS8	Lamp Assy Wht Incandescent	6032072401
M1	Meter	5024042204
P1	Connector, Power, 36 Pin Rect.	0754070000
P2	Plug, Phone Tip, Red	0753680009
R1	Resistor, 15, 10%, ½W	0178570001
R2	Resistor, 220, 10%, ½W	0172850002
R3	Resistor, 47, 10%, ½W	0167980009
R4	Resistor, 100, 10%, ½W	0174790007
S1	Switch, Pushbutton, SPDT	1000870014
S2	Switch, Pushbutton, DPDT	1000870006
S3	Switch, Pushbutton, SPDT	1000870014
S4	Switch, Pushbutton, SPDT	1000870014
S5	Switch, Toggle, DPDT	0334610001
XS5	Boot, Toggle Switch ¼-40	0531120007
XDS1	Clip, Lamp Assy Mtg.	0841510008
XDS2	Clip, Lamp Assy Mtg.	0841510008
XDS3	Clip, Lamp Assy Mtg.	0841510008
XDS4	Clip, Lamp Assy Mtg.	0841510008
XDS5	Clip, Lamp Assy Mtg.	0841510008
XDS6	Clip, Lamp Assy Mtg.	0841510008
XDS7	Clip, Lamp Assy Mtg.	0841510008
XDS8	Clip, Lamp Assy Mtg.	0841510008
XDS1	Terminal, Lamp Assy	0841520003
XDS2	Terminal, Lamp Assy	0841520003
XDS3	Terminal, Lamp Assy	0841520003
XDS4	Terminal, Lamp Assy	0841520003
XDS5	Terminal, Lamp Assy	0841520003
XDS6	Terminal, Lamp Assy	0841520003
XDS7	Terminal, Lamp Assy	0841520003
XDS8	Terminal, Lamp Assy	0841520003
	MISCELLANEOUS	
	Cap, Switch Button, Red	1000880001
	Cap, Switch Button, Black	1000880010

U1 FWD Power amp
U2 REFL Power amp
U3 VSWR amp
U4 DC O/L amp.

6032003078K

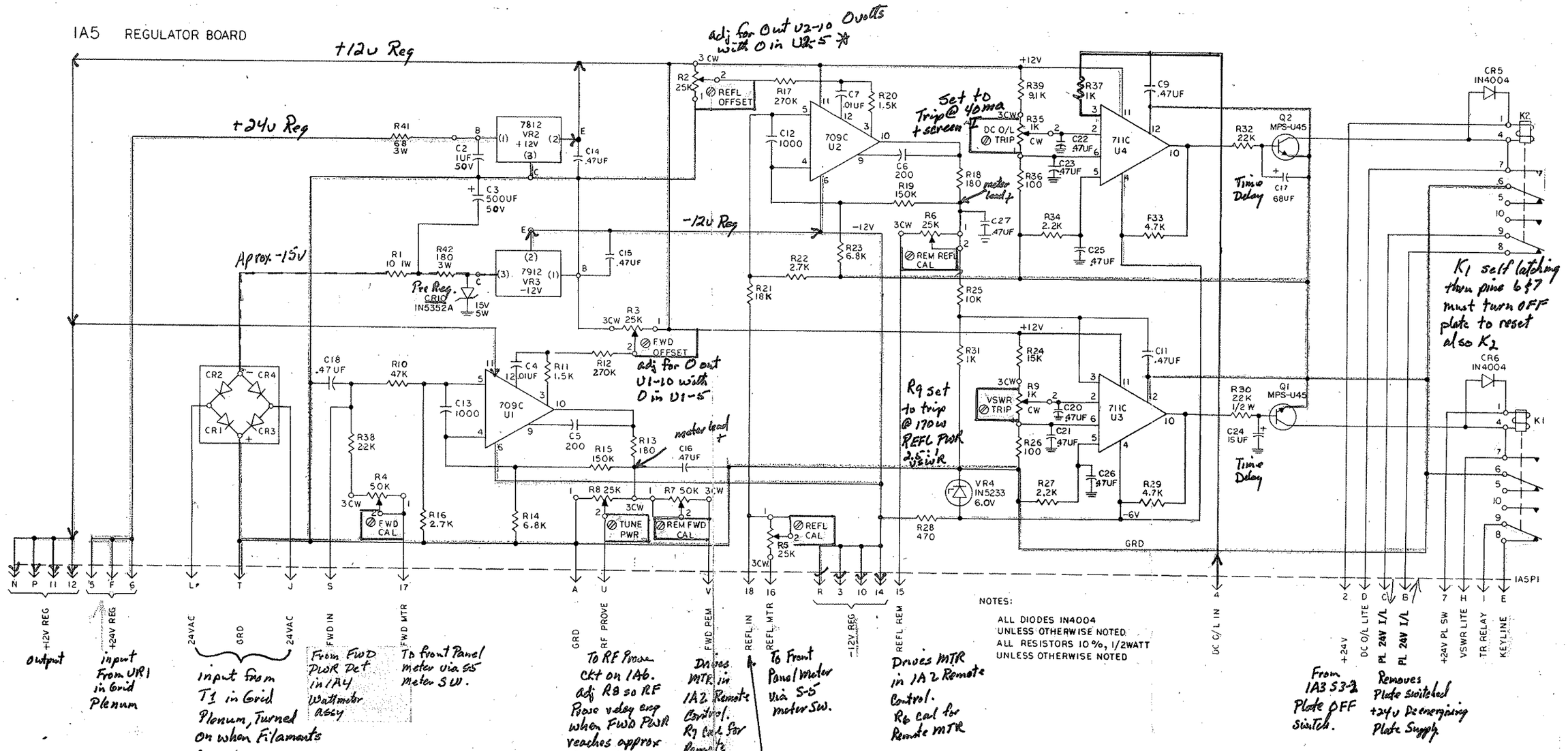

FIGURE 5-25 REGULATOR (1A5) SCHEMATIC

TP 5-25
Theory of OP 4-17

6032003094AB PC ASSY REGULATOR 1A5

REF SYMBOL	DESCRIPTION	SUNAIR PART NO.
	PC ASSY REGULATOR 1A5	6032003094
C2	Capacitor, 470µf, 50V, Tal	0280890001
C4	Capacitor, 0.01µf, 100V, 25V/Y5P	0273217771
C5	Capacitor, 200µf, 500V, DM15,5%	0258040009
C6	Capacitor, 200µf, 500V, DM15,5%	0258040009
C7	Capacitor, 0.01µf, 100V, 25V/Y5P	0273217771
C9	Capacitor, 0.47µf, 50V, X7R, 20%	0283377771
C11	Capacitor, 0.47µf, 50V, X7R, 20%	0283377771
C12	Capacitor, 0.001µf,100V, X5E, 10%	0282080007
C13	Capacitor, 0.001µf,100V, X5E, 10%	0282080007
C14	Capacitor, 0.47µf, 50V, X7R, 20%	0283377771
C15	Capacitor, 0.47µf, 50V, X7R, 20%	0283377771
C16	Capacitor, 0.47µf, 50V, X7R, 20%	0283377771
C17	Capacitor, 68µf, 15V	0296547778
C18	Capacitor, 0.47µf, 50V, X7R, 20%	0283377771
C20	Capacitor, 0.47µf, 50V, X7R, 20%	0283377771
C21	Capacitor, 0.47µf, 50V, X7R, 20%	0283377771
C22	Capacitor, 0.47µf, 50V, X7R, 20%	0283377771
C23	Capacitor, 0.47µf, 50V, X7R, 20%	0283377771
C24	Capacitor, 15µf, 20V, 198D	0280920008
C25	Capacitor, 0.47µf, 50V, X7R, 20%	0283377771
C26	Capacitor, 0.47µf, 50V, X7R, 20%	0283377771
C27	Capacitor, 0.47µf, 50V, X7R, 20%	0283377771
CR1	Diode, Rectifier 1N4004	0405180004
CR2	Diode, Rectifier 1N4004	0405180004
CR3	Diode, Rectifier 1N4004	0405180004
CR4	Diode, Rectifier 1N4004	0405180004
CR5	Diode, Rectifier 1N4004	0405180004
CR6	Diode, Rectifier 1N4004	0405180004
CR10	Diode, Zener 1N5352B	0405110006
K1	Relay, DPDT, 24V, Plug-in 3A	0667430008
K2	Relay, DPDT, 24V, Plug-in 3A	0667430008
Q1	Transistor, NPN, Si, MPSU45	0448570009
Q2	Transistor, NPN, Si, MPSU45	0448570009
R1	Resistor, 10, 10%, 1W	0187720002
R2	Pot., 25K, 10%, 3/4W, 15 Turns	0338490094
R3	Pot., 25K, 10%, 3/4W, 15 Turns	0338490094
R4	Pot., 50K, 10%, 3/4W, 15 Turns	0338490108
R5	Pot., 25K, 20%, 3/4W, 15 Turns	0338490094
R6	Pot., 25K, 10%, 3/4W, 15 Turns	0338490094
R7	Pot., 50K, 10%, 3/4W, 15 Turns	0338490108
R8	Pot., 25K, 10%, 3/4W, 15 Turns	0338490094
R9	Pot., 1K, 10%, 3/4W, 15 Turns	0338490019

REF SYMBOL	DESCRIPTION	SUNAIR PART NO.
R10	Resistor, 47K, 10%, 1/2W	0166830003
R11	Resistor, 1.5K, 10%, 1/2W	0177300001
R12	Resistor, 270K, 10%, 1/2W	0197360009
R13	Resistor, 180, 10%, 1/2W	0173640001
R14	Resistor, 6.8K, 10%, 1/2W	0162290004
R15	Resistor, 150K, 10%, 1/2W	0197320007
R16	Resistor, 2.7K, 10%, 1/2W	0165780002
R17	Resistor, 270K, 10%, 1/2W	0197360009
R18	Resistor, 180, 10%, 1/2W	0173640001
R19	Resistor, 150K, 10%, 1/2W	0197320007
R20	Resistor, 1.5K, 10%, 1/2W	0177300001
R21	Resistor, 18K, 5%, 1/2W	0177420006
R22	Resistor, 2.7K, 10%, 1/2W	0165780002
R23	Resistor, 6.8K, 10%, 1/2W	0162290004
R24	Resistor, 15K, 10%, 1/2W	0166070009
R25	Resistor, 10K, 10%, 1/2W	0167240005
R26	Resistor, 100, 10%, 1/2W	0174790007
R27	Resistor, 2.2K, 10%, 1/2W	0167360001
R28	Resistor, 470, 10%, 1/2W	0173900003
R29	Resistor, 4.7K, 10%, 1/2W	0169200001
R30	Resistor, 27K, 10%, 1/2W	0167120000
R31	Resistor, 1K, 10%, 1/2W	0167480006
R32	Resistor, 22K, 10%, 1/2W	0167120000
R33	Resistor, 4.7K, 10%, 1/2W	0169200001
R34	Resistor, 2.2K, 10%, 1/2W	0167360001
R35	Pot., 1K, 10%, 3/4W, 15 Turns	0338490019
R36	Resistor, 100, 10%, 1/2W	0174790007
R37	Resistor, 1K, 10%, 1/2W	0167480006
R38	Resistor, 22K, 10%, 1/2W	0167120000
R39	Resistor, 9.1K, 5%, 1/2W	1003420001
R41	Resistor, 68, 5%, 3W	1003370004
R42	Resistor, 180, 5%, 3W	0183320000
U1	I.C. Linear, Op Amp, UA709 MC1709	0447330004
U2	I.C. Linear, Op Amp, UA709 MC1709	0447330004
U3	I.C. Linear, MC1711CL	0448510006
U4	I.C. Linear, MC1711CL	0448510006
VR2	I.C. Linear, 7812CT	0448490005
VR3	I.C. Linear, 7912CT	0448500001
VR4	Diode, Zener, 1N5233	0405580002
XK1	Socket, Relay, DPDT Contacts	0666140006
XK2	Socket, Relay, DPDT Contacts	0666140006
XVR2	Heatsink	0841760004
XVR3	Heatsink	0841760004

SUNAIR GSL-1900A

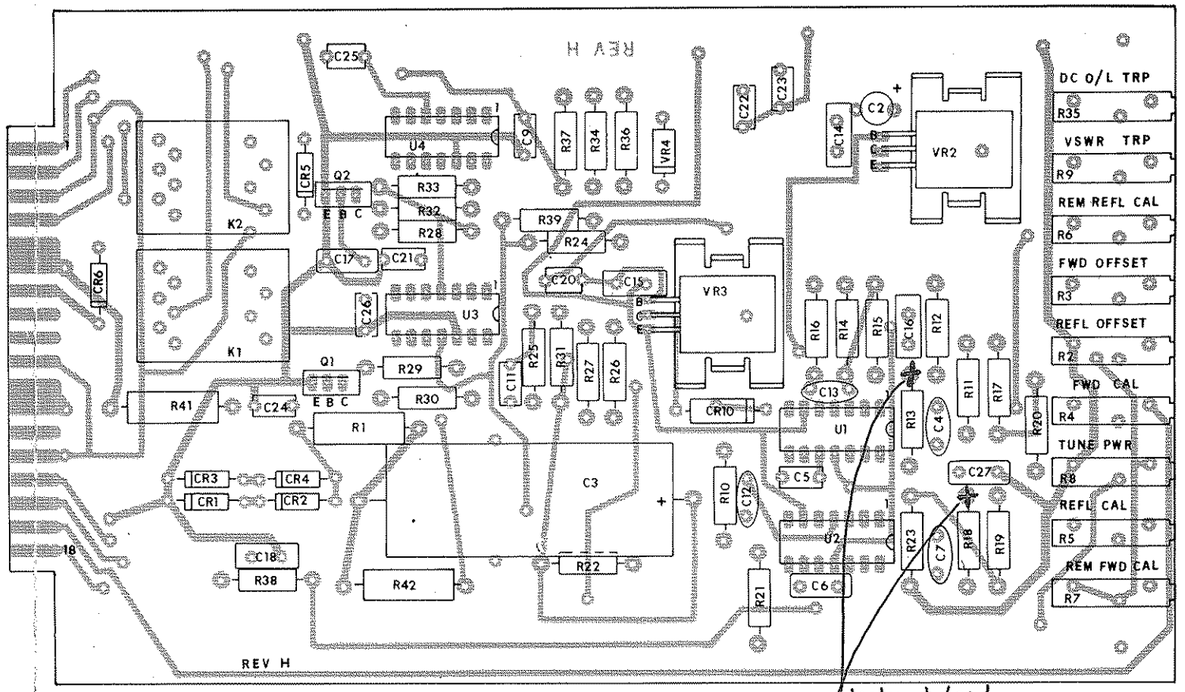

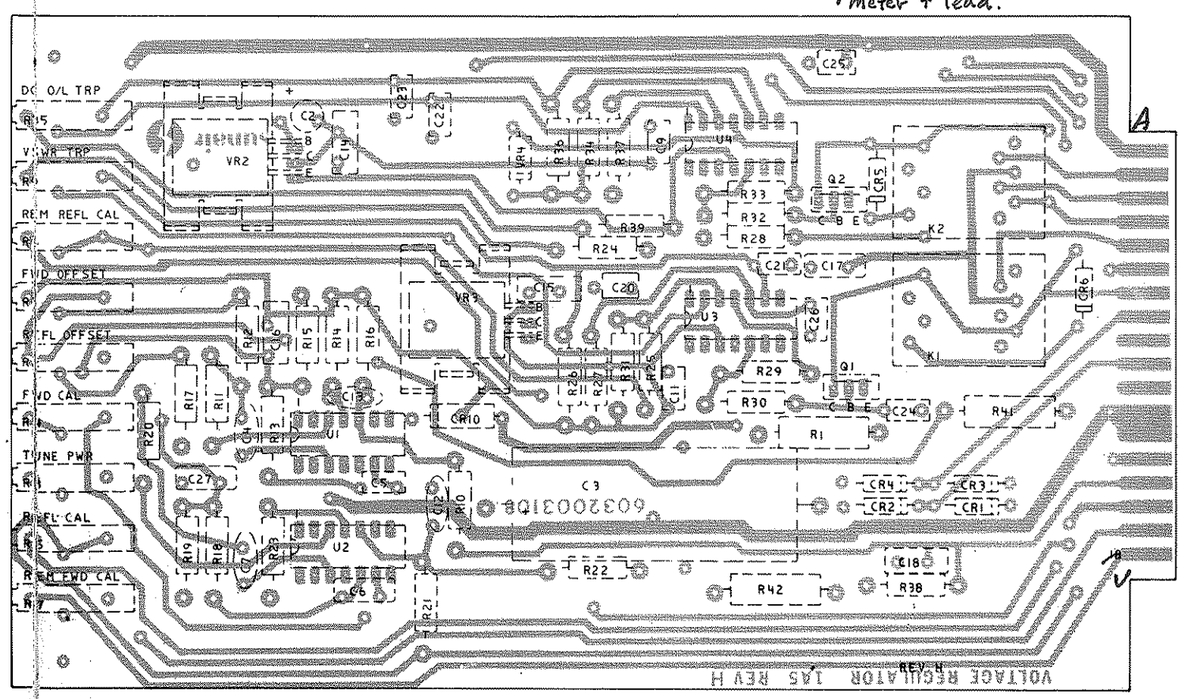

6032004074N

1 Filament Timer Ckt
2 Tune Fault Timer
3 Keyline Interrupt Ckt
4 RF Prove Ckt
5 Exclusive Ready Ckt

Tune Fault CKT
U1 with coupler is 10 sec time delay.

At 300 watts Q1 is sat by RF Prove line K2 eng.

Exclusive Ready CKT
used to insure that the ready light will come on if the RF Prove relay K-2 is pulled in wh... the Fault timer expires.

Filament Timer ckt

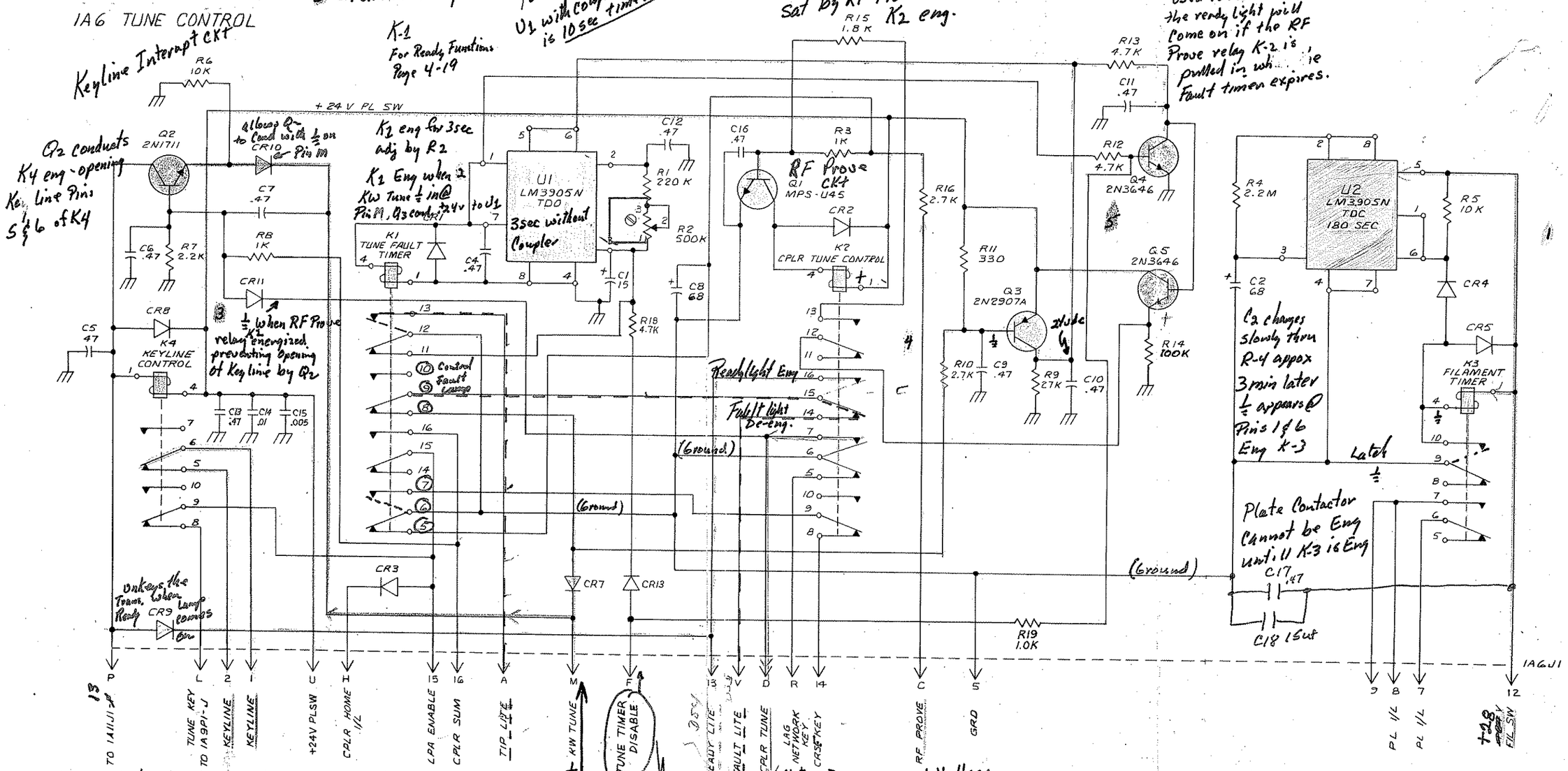

Keyline Control
(K-4) Ground @ Pin P when:
1. During Pre-Position
2. at the end of Tune Cycle Ready lite on ½ thru CR-9
3. When every coupler Sum line (Pin 16) is not at ground.

NOTES: UNLESS OTHERWISE SPECIFIED:
1. ALL RESISTORS ARE IN OHMS.
2. ALL CAPACITORS ARE IN MICROFARADS.
3. ALL DIODES ARE IN4004.

Pin F terminates the tune cycle timer when SCR on Level Control Board fires (This will happen when there is a malfunction in the tune cycle)

Not used in GSL1900A

+ Voltage From FWD Power Amp on Ray Board.

CRSEKey ½ initiates 1A11U1 Pre Position timer.

FIGURE 5-26 TUNE CONTROL (1A6) SCHEMATIC

TP 5-26
See theory of operation Page 4-19

6032004091U PC ASSY TUNE CONTROL 1A6

REF SYMBOL	DESCRIPTION	SUNAIR PART NO.
	PC ASSY TUNE CONTROL	6032004091
C1	Capacitor, 15µf, 15V, T368	0296800007
C2	Capacitor, 68µf, 15V	0296547778
C3	Not Used	
C4	Capacitor, 0.47µf, 50V, X7R, 20%	0283377771
C5	Capacitor, 0.47µf, 50V, X7R, 20%	0283377771
C6	Capacitor, 0.47µf, 50V, X7R, 20%	0283377771
C7	Capacitor, 0.47µf, 50V, X7R, 20%	0283377771
C8	Capacitor, 68µf, 25V, T368	0282150005
C9	Capacitor, 0.47µf, 50V, X7R, 20%	0283377771
C10	Capacitor, 0.47µf, 50V, X7R, 20%	0283377771
C11	Capacitor, 0.47µf, 50V, X7R, 20%	0283377771
C12	Capacitor, 0.47µf, 50V, X7R, 20%	0283377771
C13	Capacitor, 0.47µf, 50V, X7R, 20%	0283377771
C14	Capacitor, 0.001µf, 100V, Z5V	0273217771
C15	Capacitor, 0.0005µf, 100V, Z5V	0273330004
C16	Capacitor, 0.47µf, 50V, X7R, 20%	0283377771
C17	Capacitor, 0.47µf, 50V, X7R, 20%	0283377771
C18	Capacitor, 15µf, 35V	0282240004
CR1	Diode, Rectifier 1N4004	0405180004
CR2	Diode, Rectifier 1N4004	0405180004
CR3	Diode, Rectifier 1N4004	0405180004
CR4	Diode, Rectifier 1N4004	0405180004
CR5	Diode, Rectifier 1N4004	0405180004
CR6	Not Used	
CR7	Diode, Rectifier 1N4004	0405180004
CR8	Diode, Rectifier 1N4004	0405180004
CR9	Diode, Rectifier 1N4004	0405180004
CR10	Diode, Rectifier 1N4004	0405180004
CR11	Diode, Rectifier 1N4004	0405180004
CR12	Not Used	
CR13	Diode, Rectifier 1N4004	0405180004
K1	Relay, 4PDT, 24V, Plug-in 2A	0667930001
K2	Relay, 4PDT, 24V, Plug-in 2A	0667930001
K3	Relay, DPDT, 24V, Plug-in 3A	0667430008
K4	Relay, DPDT, 24V, Plug-in 3A	0667430008
Q1	Transistor, NPN, Si. MPSU45	0448570009
Q2	Transistor, NPN, Si. 2N1711	0448380005
Q3	Transistor, PNP, Si. 2N2907A	0448390001
Q4	Transistor, NPN, Si. 2N3646	0442520000
Q5	Transistor, NPN, Si. 2N3646	0442520000
R1	Resistor, 220K, 10%, ¼W	0177780002
R2	POT. 500K, 10%, ¼W, 15 Turns	0338490124
R3	Resistor, 1K, 10%, ¼W	0171560001
R4	Resistor, 2.7M, 5Z, ¼W	1004900007
R5	Resistor, 10K, 10%, ¼W	0170410005
R6	Resistor, 10K, 10%, ¼W	0170410005
R7	Resistor, 2.2K, 5%, ¼W	0178070009
R8	Resistor, 1K, 10%, ¼W	0171560001
R9	Resistor, 27K, 10%, ¼W	0171200004
R10	Resistor, 2.7K, 10%, ¼W	0186670001
R11	Resistor, 330, 5%, ¼W	0170910008
R12	Resistor, 4.7K, 5%, ¼W	0170770001
R13	Resistor, 4.7K, 5%, ¼W	0170770001
R14	Resistor, 100K, 10%, ¼W	0170390004
R15	Resistor, 1.8K, 10%, ¼W	0178190004
R16	Resistor, 2.7K, 10%, ¼W	0186670001
R17	Not Used	
R18	Resistor, 4.7K, 5%, ¼W	0170770001
R19	Resistor, 1K, 10%, ¼W	0171560001
U1	IC Linear LM3905N	0448470004
U2	IC Linear LM3905N	0448470004
XK1	Socket, Relay, 4PDT Contacts	0767120001
XK2	Socket, Relay, 4PDT Contacts	0767120001
XK3	Socket, Relay, DPDT Contacts	0666140006
XK4	Socket, Relay, DPDT Contacts	0666140006

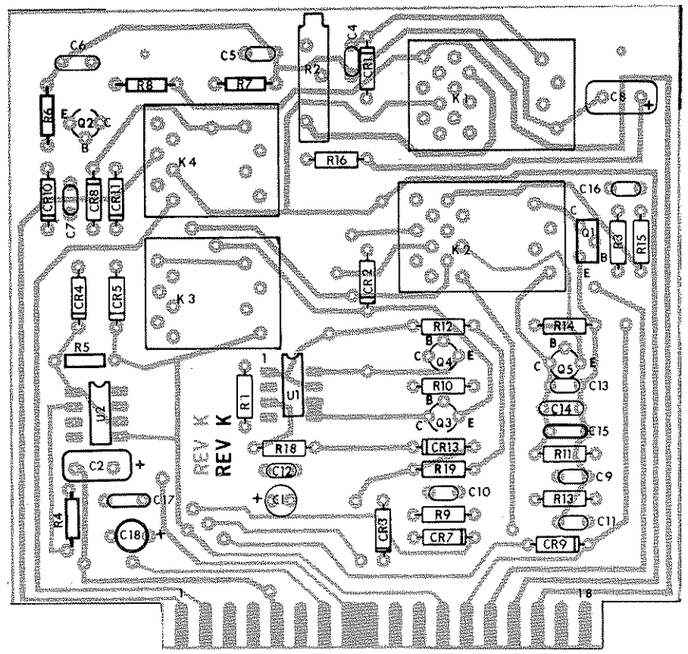

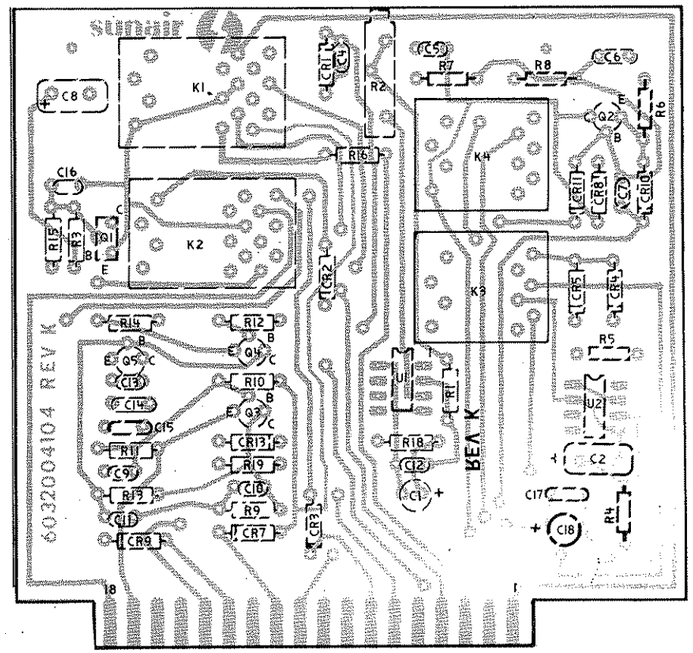

1 Phase Detector
2 ACC Detector (Voltage Doubler with Freq Comp)
3. Loading Comparator Plate Sample Detector
4. Loading Comparator Grid Sample Detector
5 Grid Voltmeter Drive
6 Plate Voltmeter Drive

6032005071G

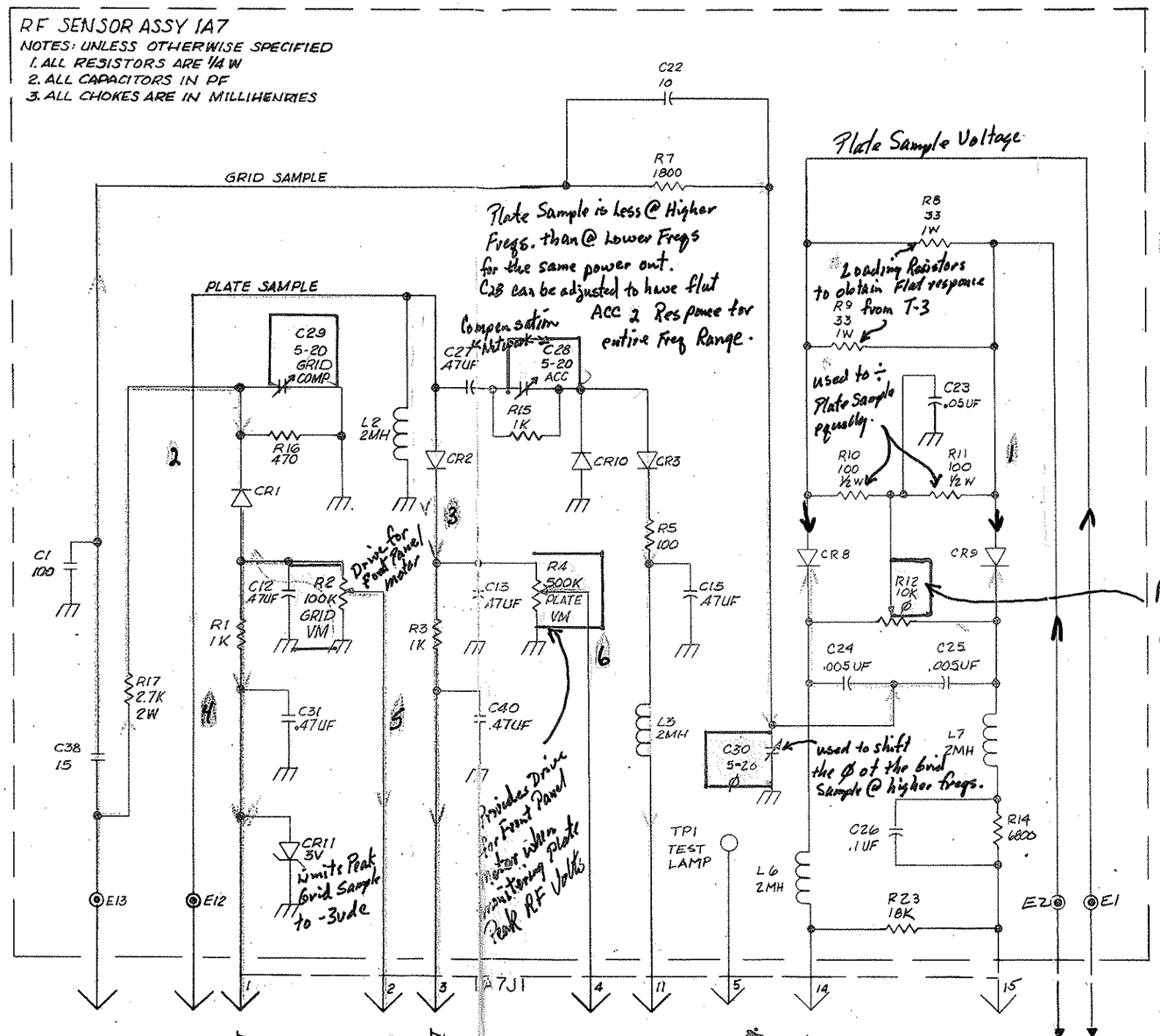

1 Ø Detector: Compares Sample Grid Voltage & Plate voltage. Zero @ 180° Plate V from Grid V.

R12 used to balance Ø Discriminator & to correct for difference in Diodes & unbalance of plate sample.

FIGURE 5-27 RF SENSOR (1A7) SCHEMATIC

TP 5-27 See theory of Operation Page 4-22

6032005097O PC ASSY RF SENSOR 1A7

REF SYMBOL	DESCRIPTION	SUNAIR PART NO.
	PC ASSY RF SENSOR	6032005097
C1	Capacitor, 100pf, 500V, DM10, 5%	0274747774
C12	Capacitor, 0.47µf, 50V, X7R, 20%	0283377771
C13	Capacitor, 0.47µf, 50V, X7R, 20%	0283377771
C15	Capacitor, 0.47µf, 50V, X7R, 20%	0283377771
C22	Capacitor, 10pf, 500V, DM10	0259830003
C23	Capacitor, 0.05µf, 25V, Y5U	0273577778
C24	Capacitor, 0.005µf, 100V, Z5U	0273330004
C25	Capacitor, 0.005µf, 100V, Z5V	0273330004
C26	Capacitor, 0.1µf, 50V, X7R, 20%	0281610002
C27	Capacitor, 0.47µf, 50V, X7R, 20%	0283377771
C28	Capacitor, 5-20pf, 100V, Ceramic	0282930001
C29	Capacitor, 5-20pf, 100V, Ceramic	0282930001
C30	Capacitor, 5-20pf, 100V, Ceramic	0282930001
C31	Capacitor, 0.47µf, 50V, X7R, 20%	0283377771
C38	Capacitor, 15pf, 500V, DM10, 5%	0259950009
C40	Capacitor, 0.47µf, 50V, X7R, 20%	0283377771
CR1	Diode, Signal, Sil. 1N3064	0405460007
CR2	Diode, Signal, Sil. 1N3064	0405460007
CR3	Diode, Signal, Sil. 1N3064	0405460007
CR8	Diode, Signal, Sil. 1N3064	0405460007
CR9	Diode, Signal, Sil. 1N3064	0405460007
CR10	Diode, Signal, Sil. 1N3064	0405460007
CR11	Diode, Zener 1N5225B	0405520000
J1	Connector, PC, 15 Pin Male	0754150003
L2	Inductor, Molded, 2000µh, 5%	0653590008
L3	Inductor, Molded, 2000µh, 5%	0653590008
L6	Inductor, Molded, 2000µh, 5%	0653590008
L7	Inductor, Molded, 2000µh, 5%	0653590008
R1	Resistor, 1K, 10%, ¼W	0197640001
R2	POT., 100K, 10%, ½W, 25 Turns	1004820011
R3	Resistor, 1K, 10%, ¼W	0197640001
R4	POT., 500K, 10%, ½W, 25 Turns	1004780010
R5	Resistor, 100, 5%, ¼W	0171180003
R7	Resistor, 1.8K, 5%, ½W	0184970008
R8	Resistor, 33, 10%, 1W	0165660007
R9	Resistor, 33, 10%, 1W	0165660007
R10	Resistor, 100, 10%, ½W	0174790007
R11	Resistor, 100, 10%, ½W	0174790007
R12	POT., 10K, 10%, ½W, 25 Turns	1004880014
R14	Resistor, 6.8K, 5%, ¼W	0174810008
R15	Resistor, 1K, 10%, ¼W	0197640001
R16	Resistor, 470, 5%, ¼W	0184110009
R17	Resistor, 2.7K, 5%, 2W	0195940008
R23	Resistor, 18K, 10%, ¼W	0175720002

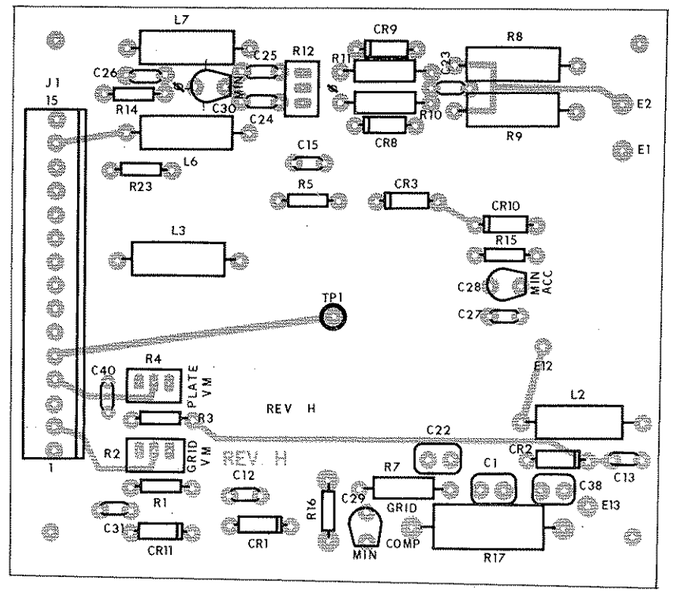

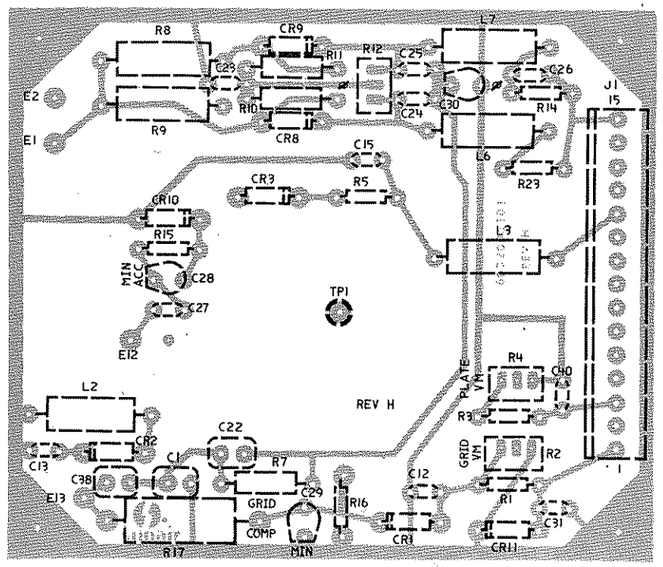

6032005071G

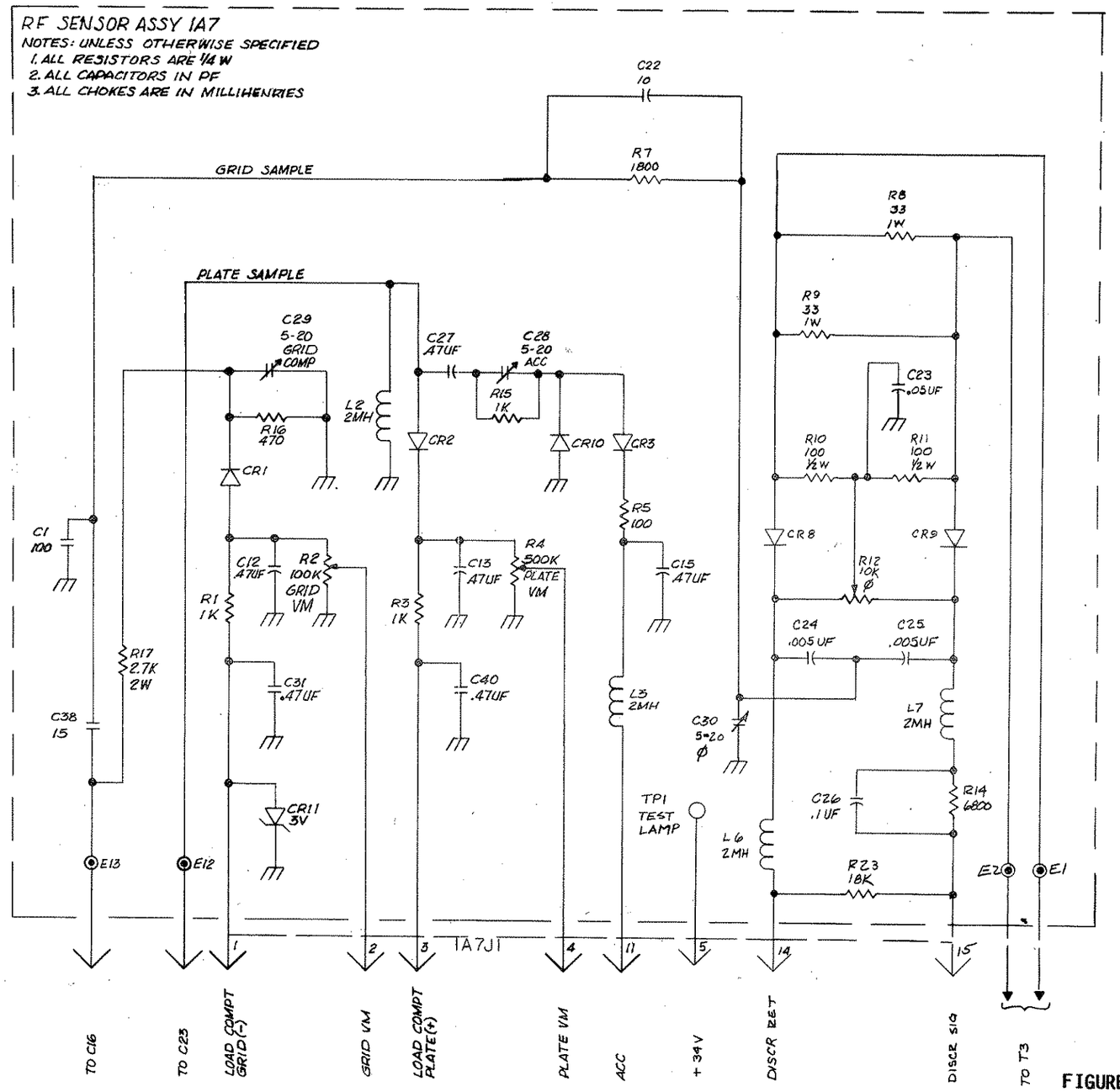

FIGURE 5-27 RF SENSOR (1A7) SCHEMATIC

6032005097O PC ASSY RF SENSOR 1A7

REF SYMBOL	DESCRIPTION	SUNAIR PART NO.
	PC ASSY RF SENSOR	6032005097
C1	Capacitor, 100pf, 500V, DM10, 5%	0274747774
C12	Capacitor, 0.47µf, 50V, X7R, 20%	0283377771
C13	Capacitor, 0.47µf, 50V, X7R, 20%	0283377771
C15	Capacitor, 0.47µf, 50V, X7R, 20%	0283377771
C22	Capacitor, 10pf, 500V, DM10	0259830003
C23	Capacitor, 0.05µf, 25V, Y5U	0273577778
C24	Capacitor, 0.005µf, 100V, Z5U	0273330004
C25	Capacitor, 0.005µf, 100V, Z5V	0273330004
C26	Capacitor, 0.1µf, 50V, X7R, 20%	0281610002
C27	Capacitor, 0.47µf, 50V, X7R, 20%	0283377771
C28	Capacitor, 5-20pf, 100V, Ceramic	0282930001
C29	Capacitor, 5-20pf, 100V, Ceramic	0282930001
C30	Capacitor, 5-20pf, 100V, Ceramic	0282930001
C31	Capacitor, 0.47µf, 50V, X7R, 20%	0283377771
C38	Capacitor, 15pf, 500V, DM10, 5%	0259950009
C40	Capacitor, 0.47µf, 50V, X7R, 20%	0283377771
CR1	Diode, Signal, Sil. 1N3064	0405460007
CR2	Diode, Signal, Sil. 1N3064	0405460007
CR3	Diode, Signal, Sil. 1N3064	0405460007
CR8	Diode, Signal, Sil. 1N3064	0405460007
CR9	Diode, Signal, Sil. 1N3064	0405460007
CR10	Diode, Signal, Sil. 1N3064	0405460007
CR11	Diode, Zener 1N5225B	0405520000
J1	Connector, PC, 15 Pin Male	0754150003
L2	Inductor, Molded, 2000µh, 5%	0653590008
L3	Inductor, Molded, 2000µh, 5%	0653590008
L6	Inductor, Molded, 2000µh, 5%	0653590008
L7	Inductor, Molded, 2000µh, 5%	0653590008
R1	Resistor, 1K, 10%, ¼W	0197640001
R2	POT., 100K, 10%, ½W, 25 Turns	1004820011
R3	Resistor, 1K, 10%, ¼w	0197640001
R4	POT., 500K, 10%, ½W, 25 Turns	1004780010
R5	Resistor, 100, 5%, ¼W	0171180003
R7	Resistor, 1.8K, 5%, ¼W	0184970008
R8	Resistor, 33, 10%, 1W	0165660007
R9	Resistor, 33, 10%, 1W	0165660007
R10	Resistor, 100, 10%, ¼W	0174790007
R11	Resistor, 100, 10%, ¼W	0174790007
R12	POT., 10K, 10%, ½w, 25 Turns	1004880014
R14	Resistor, 6.8K, 5%, ¼W	0174810008
R15	Resistor, 1K, 10%, ¼W	0197640001
R16	Resistor, 470, 5%, ¼W	0184110009
R17	Resistor, 2.7K, 5%, 2W	0195940008
R23	Resistor, 18K, 10%, ¼W	0175720002

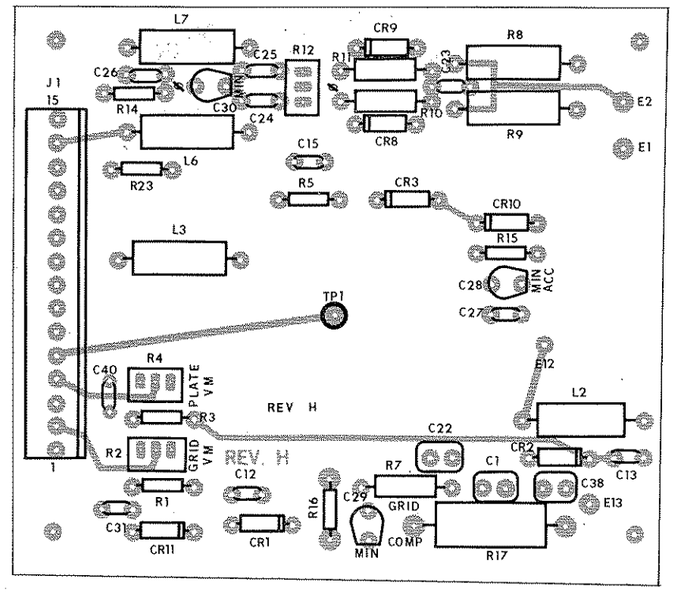

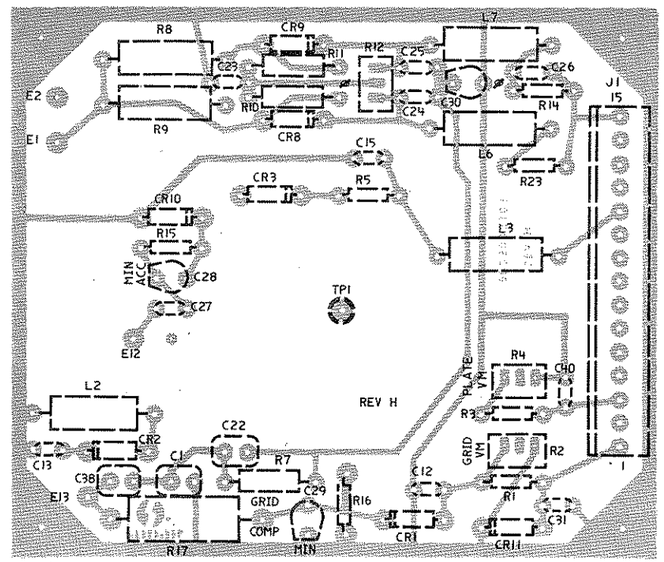

6032006573G

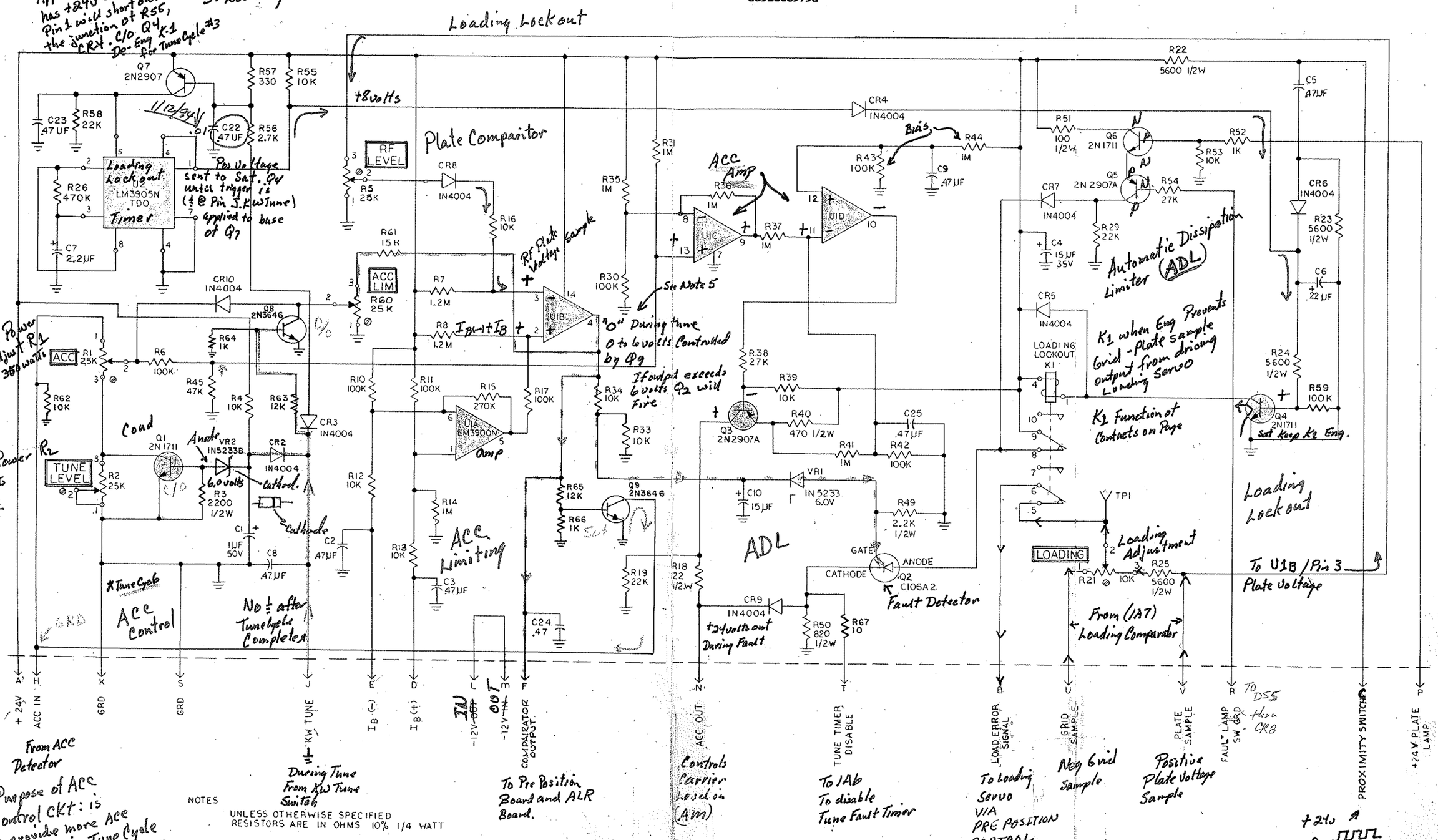

FIGURE 5-28 LEVEL CONTROL (1A9) SCHEMATIC

6032006590I PC ASSY LEVEL CONTROL 1A9

REF SYMBOL	DESCRIPTION	SUNAIR PART NO.
	PC ASSY LEVEL CONTROL	6032006590
C1	Capacitor, 1µf, 50V, 109D	0280910002
C2	Capacitor, 0.47µf, 50V, 20%, X7R	0283377771
C3	Capacitor, 0.47µf, 50V, 20%, X7R	0283377771
C4	Capacitor, 15µf, 50V, 196D	0274000008
C5	Capacitor, 0.47µf, 50V, X7R, 20%	0283377771
C6	Capacitor, 22µf, 15V	0281690006
C7	Capacitor, 2.2µf, 35V, T368	0273950002
C8	Capacitor, 0.47µf, 50V, X7R, 20%	0283377771
C9	Capacitor, 0.47µf, 50V, X7R, 20%	0283377771
C10	Capacitor, 15µf, 50V, 196D	0274000008
* C22	Capacitor, 0.47µf, 50V, X7R, 20%	0283377771
C23	Capacitor, 0.47µf, 50V, X7R, 20%	0283377771
C24	Capacitor, 0.47µf, 50V, X7R, 20%	0283377771
C25	Capacitor, 0.47µf, 50V, X7R, 20%	0283377771
CR2	Diode, Rectifier 1N4004	0405180004
CR3	Diode, Rectifier 1N4004	0405180004
CR4	Diode, Rectifier 1N4004	0405180004
CR5	Diode, Rectifier 1N4004	0405180004
CR6	Diode, Rectifier 1N4004	0405180004
CR7	Diode, Rectifier 1N4004	0405180004
CR8	Diode, Rectifier 1N4004	0405180004
CR9	Diode, Rectifier 1N4004	0405180004
CR10	Diode, Rectifier 1N4004	0405180004
K1	Relay, DPDT, 24V, Plug-in 3A	0667430008
Q1	Transistor, NPN, Si. 2N1711	0448380005
Q2	Diode, SCR, C106A2	0447070002
Q3	Transistor, PNP, Si. 2N2907A	0448390001
Q4	Transistor, NPN, Si. 2N1711	0448380005
Q5	Transistor, PNP, Si. 2N2907A	0448390001
Q6	Transistor, NPN, Si. 2N1711	0448380005
Q7	Transistor, PNP, Si. 2N2907A	0448390001
Q8	Transistor, NPN, Si. 2N3646	0442520000
Q9	Transistor, NPN, Si. 2N3646	0442520000
R1	POT., 25K, 10%, ¾W, 15 Turns	0338490094
R2	POT., 25K, 10%, ¾W, 15 Turns	0338490094
R3	Resistor, 2.2K, 10%, ½W	0167360001
R4	Resistor, 10K, 10%, ½W	0170410005
R5	POT., 25K, 10%, ¾W, 15 Turns	0338490094
R6	Resistor, 100K, 10%, ½W	0170390004
R7	Resistor, 1.2M, 10%, ½W	0174900003
R8	Resistor, 1.2M, 10%, ½W	0174900003
R10	Resistor, 100K, 10%, ½W	0170390004
R11	Resistor, 100K, 10%, ½W	0170390004
R12	Resistor, 10K, 10%, ½W	0170410005
R13	Resistor, 10K, 10%, ½W	0170410005
R14	Resistor, 1M, 10%, ½W	0170650006
R15	Resistor, 270K, 10%, ½w	0172110009
R16	Resistor, 10K, 10%, ½w	0170410005
R17	Resistor, 100K, 10%, ½w	0170390004

REF SYMBOL	DESCRIPTION	SUNAIR PART NO.
R18	Resistor, 22, 10%, ½W	0186930003
R19	Resistor, 22K, 5%, ½W	0172230004
R21	POT., 10K, 10%, ¾w, 15 Turns	0338490043
R22	Resistor, 5.6K, 10%, ½W	0185880002
R23	Resistor, 5.6K, 10%, ½W	0185880002
R24	Resistor, 5.6K, 10%, ½W	0185880002
R25	Resistor, 5.6K, 10%, ½W	0185880002
R26	Resistor, 470K, 10%, ½W	0180570005
R29	Resistor, 22K, 5%, ½W	0172230004
R30	Resistor, 100K, 10%, ½w	0170390004
R31	Resistor, 1M, 10%, ½W	0170650006
R33	Resistor, 10K, 10%, ½W	0170410005
R34	Resistor, 10K, 10%, ½W	0170410005
R35	Resistor, 1M, 10%, ½W	0170650006
R36	Resistor, 1M, 10%, ½w	0170650006
R37	Resistor, 1M, 10%, ½w	0170650006
R38	Resistor, 27K, 10%, ½w	0171200004
R39	Resistor, 10K, 10%, ½W	0170410005
R40	Resistor, 470, 10%, ½w	0173900003
R41	Resistor, 1M, 10%, ½w	0170650006
R42	Resistor, 100K, 10%, ½W	0170390004
R43	Resistor, 100K, 10%, ½W	0170390004
R44	Resistor, 1M, 10%, ½W	0170650006
R45	Resistor, 47K, 10%, ½W	0171060008
R49	Resistor, 2.2K, 10%, ½W	0167360001
R50	Resistor, 820, 10%, ½W	0175600007
R51	Resistor, 100, 10%, ½W	0174790007
R52	Resistor, 1K, 10%, ½w	0167480006
R53	Resistor, 10K, 10%, ½W	0170410005
R54	Resistor, 27K, 10%, ½w	0171200004
R55	Resistor, 10K, 10%, ½W	0170410005
R56	Resistor, 2.7K, 10%, ½W	0186670001
R57	Resistor, 330, 5%, ½W	0170910008
R58	Resistor, 22K, 5%, ½W	0172230004
R59	Resistor, 100K, 10%, ½W	0170390004
R60	POT., 25K, 10%, ¾W, 15 Turns	0338490094
R61	Resistor, 15K, 5%, ½W	0195700007
R62	Resistor, 10K, 10%, ½w	0170410005
R63	Resistor, 12K, 10%, ½W	0183180003
R64	Resistor, 1K, 10%, ½W	0171560001
R65	Resistor, 12K, 10%, ½W	0183180003
R66	Resistor, 1K, 10%, ½W	0171560001
R67	Resistor, 10, 10%, ½W	0177160004
TP1	Test Jack, PCB, Green	0753820005
U1	IC Linear LM3900N	0448830001
U2	IC Linear LM3905N	0448470004
VR1	Diode, Zener, 1N5233	0405580002
VR2	Diode, Zener, 1N5233	0405580002
XK1	Socket, Relay, DPDT Contacts	0666140006

* .01 mono 0281730008

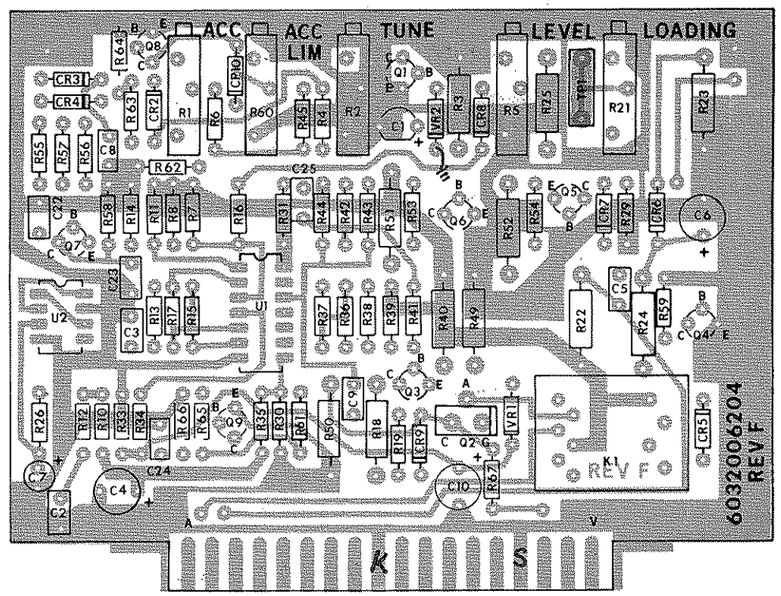

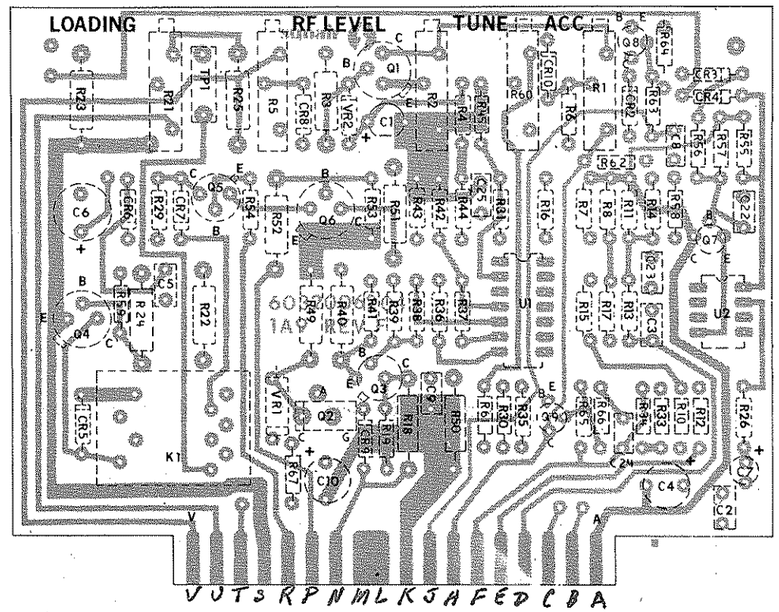

6032006573G

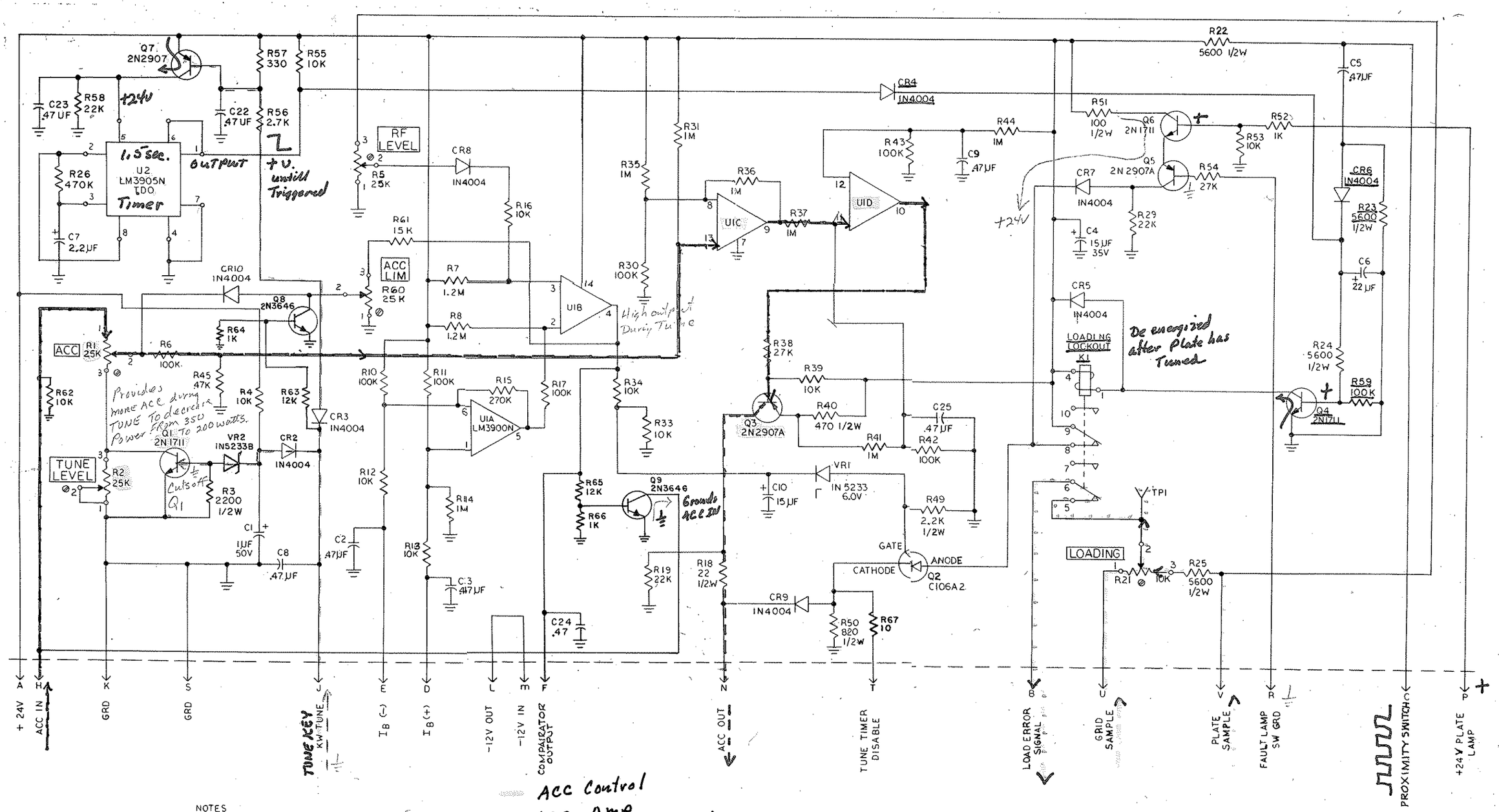

NOTES

UNLESS OTHERWISE SPECIFIED
RESISTORS ARE IN OHMS 10% 1/4 WATT

ACC Control
ACC Amp
Loading Lockout timer
Loading Lockout Relay and Control
Plate Comparator
ADL Circuit
Loading Adjustment

See Theory of Operation Page 4-21

FIGURE 5-28 LEVEL CONTROL (1A9) SCHEMATIC

6032006590I PC ASSY LEVEL CONTROL 1A9

REF SYMBOL	DESCRIPTION	SUNAIR PART NO.
	PC ASSY LEVEL CONTROL	6032006590
C1	Capacitor, 1µf, 50V, 109D	0280910002
C2	Capacitor, 0.47µf, 50V, 20%, X7R	0283377771
C3	Capacitor, 0.47µf, 50V, 20%, X7R	0283377771
C4	Capacitor, 15µf, 50V, 196D	0274000008
C5	Capacitor, 0.47µf, 50V, X7R, 20%	0283377771
C6	Capacitor, 22µf, 15V	0281690006
C7	Capacitor, 2.2µf, 35V, T368	0273950002
C8	Capacitor, 0.47µf, 50V, X7R, 20%	0283377771
C9	Capacitor, 0.47µf, 50V, X7R, 20%	0283377771
C10	Capacitor, 15µf, 50V, 196D	0274000008
C22	Capacitor, 0.47µf, 50V, X7R, 20%	0283377771
C23	Capacitor, 0.47µf, 50V, X7R, 20%	0283377771
C24	Capacitor, 0.47µf, 50V, X7R, 20%	0283377771
C25	Capacitor, 0.47µf, 50V, X7R, 20%	0283377771
CR2	Diode, Rectifier 1N4004	0405180004
CR3	Diode, Rectifier 1N4004	0405180004
CR4	Diode, Rectifier 1N4004	0405180004
CR5	Diode, Rectifier 1N4004	0405180004
CR6	Diode, Rectifier 1N4004	0405180004
CR7	Diode, Rectifier 1N4004	0405180004
CR8	Diode, Rectifier 1N4004	0405180004
CR9	Diode, Rectifier 1N4004	0405180004
CR10	Diode, Rectifier 1N4004	0405180004
K1	Relay, DPDT, 24V, Plug-in 3A	0667430008
Q1	Transistor, NPN, Si. 2N1711	0448380005
Q2	Diode, SCR, C106A2	0447070002
Q3	Transistor, PNP, Si. 2N2907A	0448390001
Q4	Transistor, NPN, Si. 2N1711	0448380005
Q5	Transistor, PNP, Si. 2N2907A	0448390001
Q6	Transistor, NPN, Si. 2N1711	0448380005
Q7	Transistor, PNP, Si. 2N2907A	0448390001
Q8	Transistor, NPN, Si. 2N3646	0442520000
Q9	Transistor, NPN, Si. 2N3646	0442520000
R1	POT., 25K, 10%, ⅜W, 15 Turns	0338490094
R2	POT., 25K, 10%, ⅜W, 15 Turns	0338490094
R3	Resistor, 2.2K, 10%, ½W	0167360001
R4	Resistor, 10K, 10%, ¼W	0170410005
R5	POT., 25K, 10%, ⅜W, 15 Turns	0338490094
R6	Resistor, 100K, 10%, ¼W	0170390004
R7	Resistor, 1.2M, 10%, ¼W	0174900003
R8	Resistor, 1.2M, 10%, ¼W	0174900003
R10	Resistor, 100K, 10%, ¼W	0170390004
R11	Resistor, 100K, 10%, ¼W	0170390004
R12	Resistor, 10K, 10%, ¼W	0170410005
R13	Resistor, 10K, 10%, ¼W	0170410005
R14	Resistor, 1M, 10%, ¼W	0170650006
R15	Resistor, 270K, 10%, ¼w	0172110009
R16	Resistor, 10K, 10%, ¼w	0170410005
R17	Resistor, 100K, 10%, ¼w	0170390004

REF SYMBOL	DESCRIPTION	SUNAIR PART NO.
R18	Resistor, 22, 10%, ¼W	0186930003
R19	Resistor, 22K, 5%, ¼W	0172230004
R21	POT., 10K, 10%, ⅜w, 15 Turns	0338490043
R22	Resistor, 5.6K, 10%, ¼W	0185880002
R23	Resistor, 5.6K, 10%, ¼W	0185880002
R24	Resistor, 5.6K, 10%, ¼W	0185880002
R25	Resistor, 5.6K, 10%, ¼W	0185880002
R26	Resistor, 470K, 10%, ¼W	0180570005
R29	Resistor, 22K, 5%, ¼W	0172230004
R30	Resistor, 100K, 10%, ¼w	0170390004
R31	Resistor, 1M, 10%, ¼W	0170650006
R33	Resistor, 10K, 10%, ¼W	0170410005
R34	Resistor, 10K, 10%, ¼W	0170410005
R35	Resistor, 1M, 10%, ¼W	0170650006
R36	Resistor, 1M, 10%, ¼w	0170650006
R37	Resistor, 1M, 10%, ¼w	0170650006
R38	Resistor, 27K, 10%, ¼w	0171200004
R39	Resistor, 10K, 10%, ¼W	0170410005
R40	Resistor, 470, 10%, ½w	0173900003
R41	Resistor, 1M, 10%, ¼w	0170650006
R42	Resistor, 100K, 10%, ¼W	0170390004
R43	Resistor, 100K, 10%, ¼W	0170390004
R44	Resistor, 1M, 10%, ¼W	0170650006
R45	Resistor, 47K, 10%, ¼W	0171060008
R49	Resistor, 2.2K, 10%, ¼W	0167360001
R50	Resistor, 820, 10%, ½W	0175600007
R51	Resistor, 100, 10%, ½W	0174790007
R52	Resistor, 1K, 10%, ¼w	0167480006
R53	Resistor, 10K, 10%, ¼W	0170410005
R54	Resistor, 27K, 10%, ¼w	0171200004
R55	Resistor, 10K, 10%, ¼W	0170410005
R56	Resistor, 2.7K, 10%, ¼W	0186670001
R57	Resistor, 330, 5%, ¼W	0170910008
R58	Resistor, 22K, 5%, ¼W	0172230004
R59	Resistor, 100K, 10%, ¼W	0170390004
R60	POT., 25K, 10%, ⅜W, 15 Turns	0338490094
R61	Resistor, 15K, 5%, ¼W	0195700007
R62	Resistor, 10K, 10%, ¼w	0170410005
R63	Resistor, 12K, 10%, ¼W	0183180003
R64	Resistor, 1K, 10%, ¼W	0171560001
R65	Resistor, 12K, 10%, ¼W	0183180003
R66	Resistor, 1K, 10%, ¼W	0171560001
R67	Resistor, 10, 10%, ¼W	0177160004
TP1	Test Jack, PCB, Green	0753820005
U1	IC Linear LM3900N	0448830001
U2	IC Linear LM3905N	0448470004
VR1	Diode, Zener, 1N5233	0405580002
VR2	Diode, Zener, 1N5233	0405580002
XK1	Socket, Relay, DPDT Contacts	0666140006

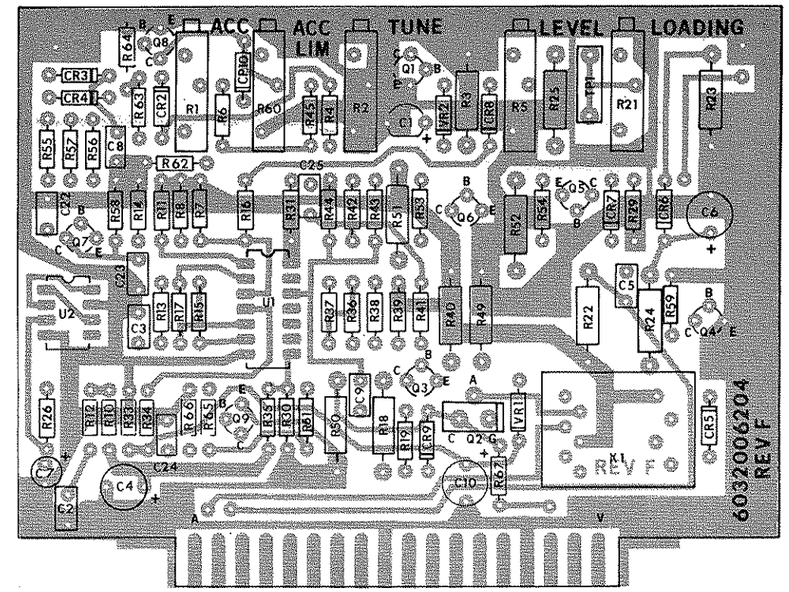

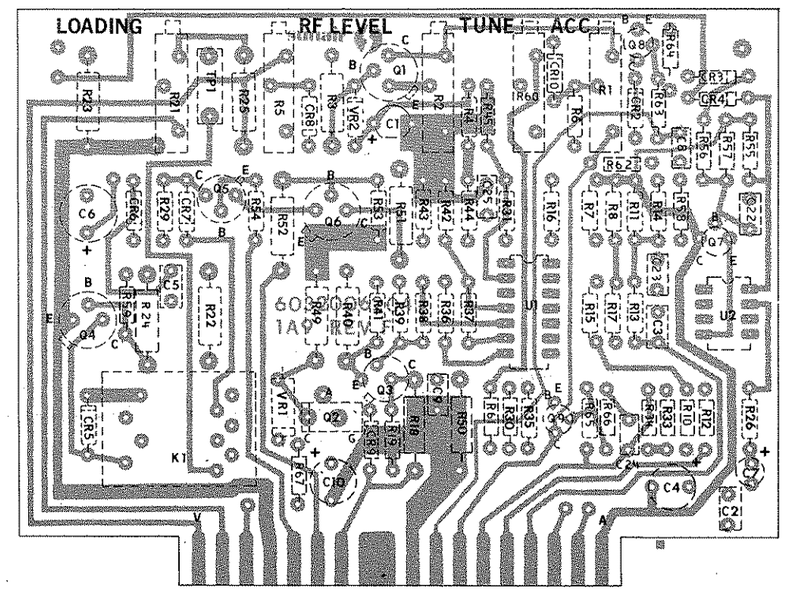

1. Pre Position Timer Ckt
   a. ⏚ @ 1A11P1/Pin 5.
   b. ⏚ @ Base of Q3
   c. Q3 forward biased = +24 volts to Pins 5 and 6 of U-1
   d. U-1 allows +24v @ pins 1 & 7 for 1 sec.
   e. K-1 eng. for 1 sec.
2. ① while K-1 is eng
   ② U-2, D & C = Set cond.
   U2C-8 = H } Cap Sweep C20 & C25
   U2D-11 = L

[H/L] = K1 De-eng
No ⏚ to CR9
"1" on Line 7
to CR 14

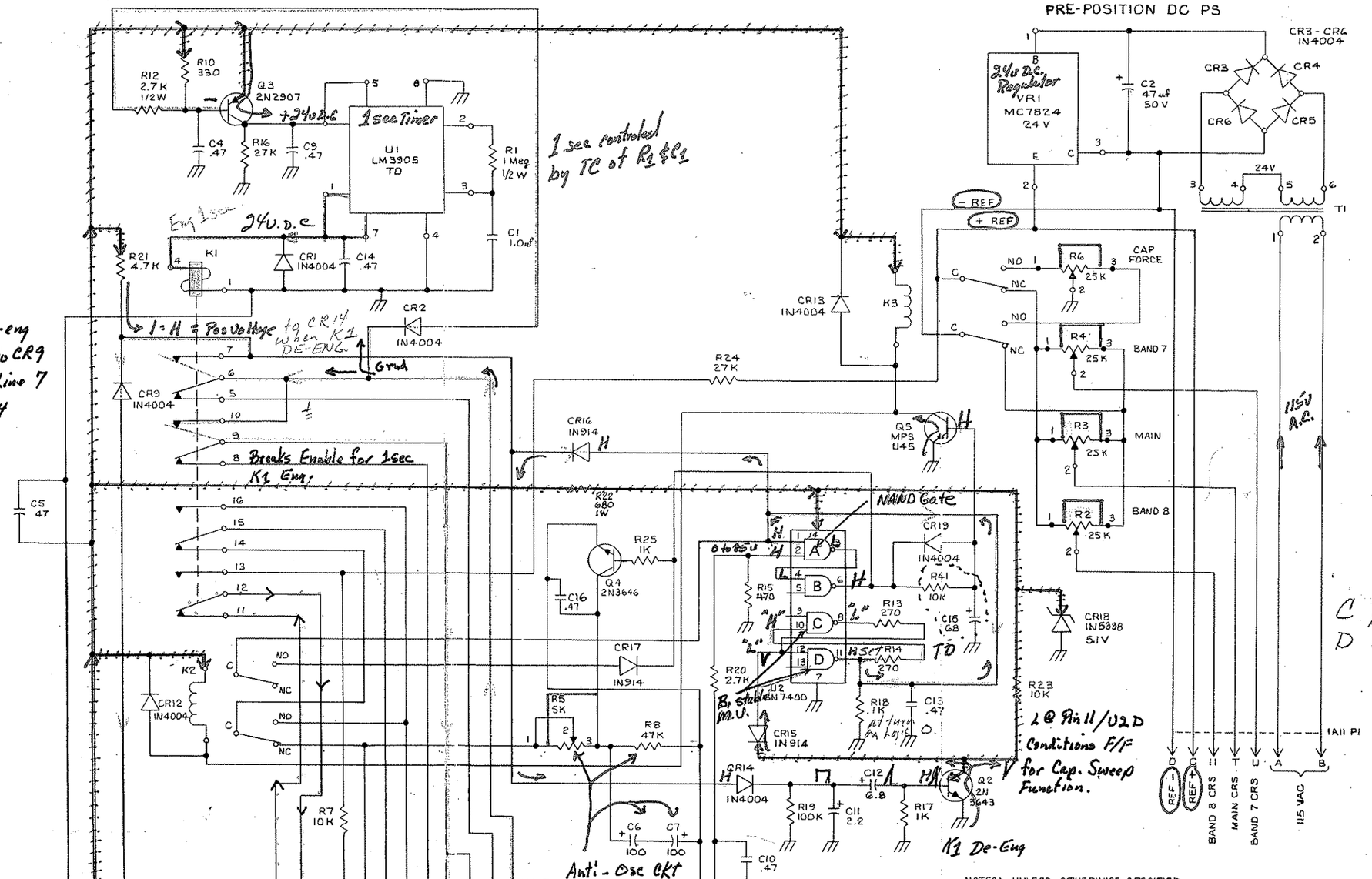

NOTES: UNLESS OTHERWISE SPECIFIED
1. ALL RESISTORS ARE IN OHM, 1/4 W, ± 10%
2. ALL CAPACITORS ARE IN MICROFARADS.
3. FOR USE WITH (1A9) LEVEL CONTROL PC BOARDS WITH REVISION LEVEL LOWER THAN E, REMOVE R7.

FIGURE 5-29 PRE-POSITION CONTROL (1A11) SCHEMATIC

See Theory of Operation Page 4-7

TP 5-29

6032008096K PC ASSY PRE-POSITION 1A11

REF SYMBOL	DESCRIPTION	SUNAIR PART NO.
	PC ASSY PRE-POSITION 1A11	6032008096
C1	Capacitor, 1µf, 50V, 198D	0280910002
C2	Capacitor, 47µf, 50V	0246160004
C4	Capacitor, 0.47µf, 50V, X7R, 20%	0283377771
C5	Capacitor, 0.47µf, 50V, X7R, 20%	0283377771
C6	Capacitor, 100µf, 20V	0282230009
C7	Capacitor, 100µf, 20V	0282230009
C9	Capacitor, 0.47µf, 50V, X7R, 20%	0283377771
C10	Capacitor, 0.47µf, 50V, X7R, 20%	0283377771
C11	Capacitor, 2.2µf, 35V, T368	0273950002
C12	Capacitor, 6.8 µf, 20V, T368	0296780006
C13	Capacitor, 0.47µf, 50V, X7R, 20%	0283377771
C14	Capacitor, 0.47µf, 50v, X7R, 20%	0283377771
C15	Capacitor, 68µf, 25V, T368	0282150005
C16	Capacitor, 0.47µf, 50V, X7R, 20%	0283377771
CR1	Diode, Rectifier, 1N4004	0405180004
CR2	Diode, Rectifier, 1N4004	0405180004
CR3	Diode, Rectifier, 1N4004	0405180004
CR4	Diode, Rectifier, 1N4004	0405180004
CR5	Diode, Rectifier, 1N4004	0405180004
CR6	Diode, Rectifier, 1N4004	0405180004
CR9	Diode, Rectifier, 1N4004	0405180004
CR12	Diode, Rectifier, 1N4004	0405180004
CR13	Diode, Rectifier, 1N4004	0405180004
CR14	Diode, Rectifier, 1N4004	0405180004
CR15	Diode, Signal, Si. 1N914	0442900007
CR16	Diode, Signal, Si. 1N914	0442900007
CR17	Diode, Signal, Si. 1N914	0442900007
CR18	Diode, Zener, 1N5338B	0405560001
CR19	Diode, Rectifier, 1N4004	0405180004
K1	Relay, 4PDT, 24V, Plug-in 2A	0667930001
K2	Relay, DPDT, 26V, TO-5 case	0666260001
K3	Relay, DPDT, 26V, TO-5 case	0666260001
Q2	Transistor, NPN, Si. 2N3643	0443310009
Q3	Transistor, PNP, Si. 2N2907A	0448390001

REF SYMBOL	DESCRIPTION	SUNAIR PART NO.
Q4	Transistor, NPN, Si. 2N3646	0442520000
Q5	Transistor, NPN, Si. MPSU45	0448570009
R1	Resistor, 1M, 10%, ½W	0166330001
R2	POT., 25K, 10%, ¾W, 15 Turns	0338490094
R3	POT., 25K, 10%, ¾W, 15 Turns	0338490094
R4	POT., 25K, 10%, ¾W, 15 Turns	0338490094
R5	POT., 5K, 10%, ½W, 4 Turns	0197510001
R6	POT., 25K, 10%, ¾W, 15 Turns	0338490094
R7	Resistor, 10K, 10%, ¼W	0170410005
R8	Resistor, 47K, 10%, ¼W	0171060008
R10	Resistor, 330, 5%, ¼W	0170910008
R12	Resistor, 2.7K, 10%, ¼W	0186670001
R13	Resistor, 270, 10%, ¼W	0178450006
R14	Resistor, 270, 10%, ¼W	0178450006
R15	Resistor, 470, 10%, ¼W	0184110009
R16	Resistor, 27K, 10%, ¼W	0171200004
R17	Resistor, 1K, 10%, ¼W	0171560001
R18	Resistor, 1K, 10%, ¼W	0171560001
R19	Resistor, 100k, 10%, ¼W	0170390004
R20	Resistor, 2.7K, 10%, ¼W	0186670001
R21	Resistor, 4.7K, 5%, ¼W	0170770001
R22	Resistor, 680, 10%, 1W	0197610005
R23	Resistor, 10K, 10%, ¼W	0170410005
R24	Resistor, 27K, 10%, ¼W	0171200004
R25	Resistor, 1K, 10%, ¼W	0171560001
R41	Resistor, 10K, 10%, ¼W	0170410005
T1	Transformer, PS, AC, PC Mtg.	0491680007
U1	IC Linear LM3905N	0448470004
U2	IC Linear SN7400N	0448070006
VR1	IC Linear MC7824CT	0448480000
	MISCELLANEOUS	
	Heatsink	0841760004
	Socket, Relay, 4PDT Contacts	0767120001
	Strap, Retainer Relay	0668080001

SUNAIR GSL-1900A

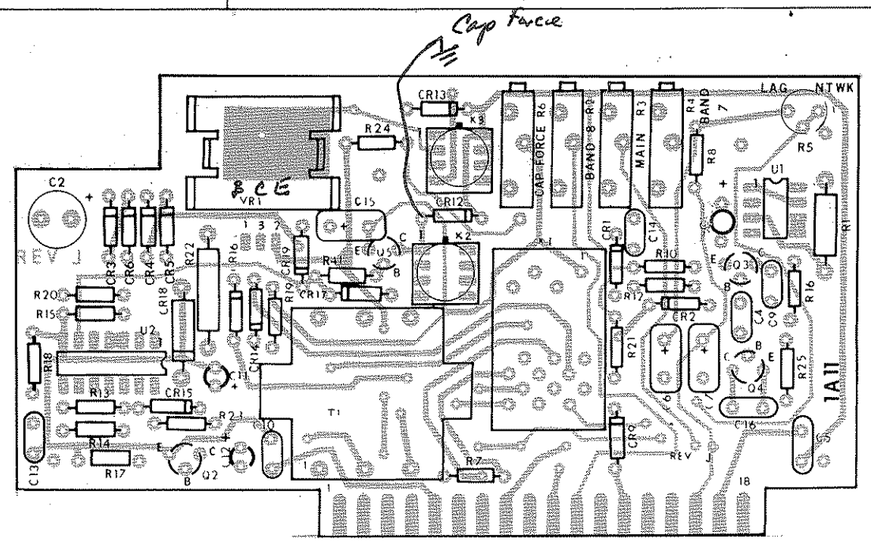

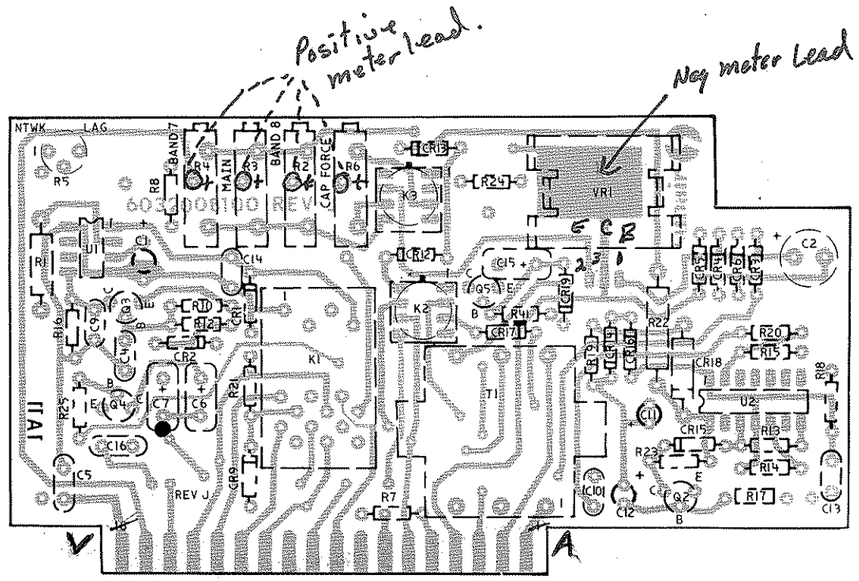

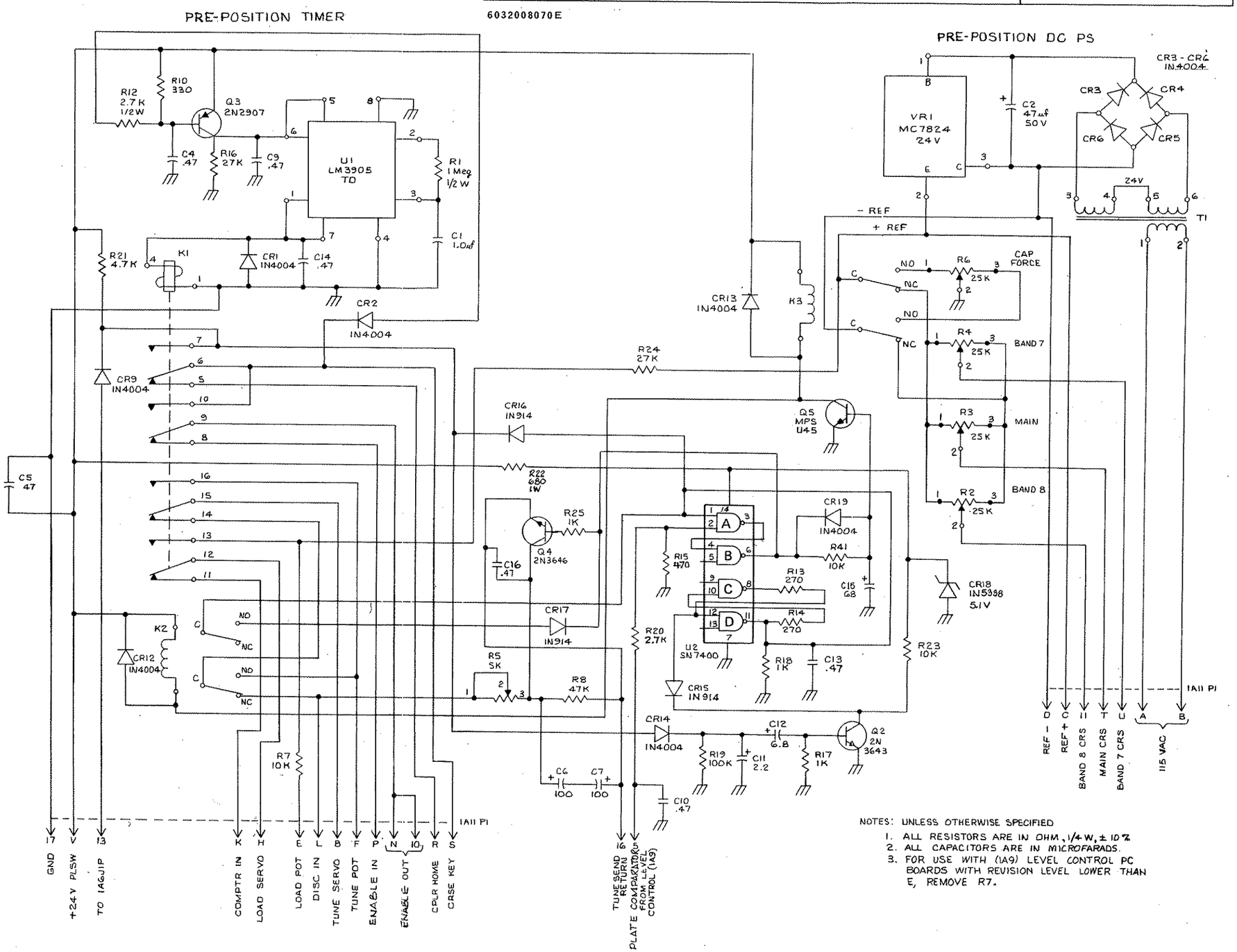

FIGURE 5-29 PRE-POSITION CONTROL (1A11) SCHEMATIC

6032008096K PC ASSY PRE-POSITION 1A11

REF SYMBOL	DESCRIPTION	SUNAIR PART NO.
	PC ASSY PRE-POSITION 1A11	6032008096
C1	Capacitor, 1µf, 50V, 198D	0280910002
C2	Capacitor, 47µf, 50V	0246160004
C4	Capacitor, 0.47µf, 50V, X7R, 20%	0283377771
C5	Capacitor, 0.47µf, 50V, X7R, 20%	0283377771
C6	Capacitor, 100µf, 20V	0282230009
C7	Capacitor, 100µf, 20V	0282230009
C9	Capacitor, 0.47µf, 50V, X7R, 20%	0283377771
C10	Capacitor, 0.47µf, 50V, X7R, 20%	0283377771
C11	Capacitor, 2.2µf, 35V, T368	0273950002
C12	Capacitor, 6.8 µf, 20V, T368	0296780006
C13	Capacitor, 0.47µf, 50V, X7R, 20%	0283377771
C14	Capacitor, 0.47µf, 50v, X7R, 20%	0283377771
C15	Capacitor, 68µf, 25V, T368	0282150005
C16	Capacitor, 0.47µf, 50V, X7R, 20%	0283377771
CR1	Diode, Rectifier, 1N4004	0405180004
CR2	Diode, Rectifier, 1N4004	0405180004
CR3	Diode, Rectifier, 1N4004	0405180004
CR4	Diode, Rectifier, 1N4004	0405180004
CR5	Diode, Rectifier, 1N4004	0405180004
CR6	Diode, Rectifier, 1N4004	0405180004
CR9	Diode, Rectifier, 1N4004	0405180004
CR12	Diode, Rectifier, 1N4004	0405180004
CR13	Diode, Rectifier, 1N4004	0405180004
CR14	Diode, Rectifier, 1N4004	0405180004
CR15	Diode, Signal, Si. 1N914	0442900007
CR16	Diode, Signal, Si. 1N914	0442900007
CR17	Diode, Signal, Si. 1N914	0442900007
CR18	Diode, Zener, 1N5338B	0405560001
CR19	Diode, Rectifier, 1N4004	0405180004
K1	Relay, 4PDT, 24V, Plug-in 2A	0667930001
K2	Relay, DPDT, 26V, TO-5 case	0666260001
K3	Relay, DPDT, 26V, TO-5 case	0666260001
Q2	Transistor, NPN, Si. 2N3643	0443310009
Q3	Transistor, PNP, Si. 2N2907A	0448390001

REF SYMBOL	DESCRIPTION	SUNAIR PART NO.
Q4	Transistor, NPN, Si. 2N3646	0442520000
Q5	Transistor, NPN, Si. MPSU45	0448570009
R1	Resistor, 1M, 10%, ½W	0166330001
R2	POT., 25K, 10%, ¾W, 15 Turns	0338490094
R3	POT., 25K, 10%, ¾W, 15 Turns	0338490094
R4	POT., 25K, 10%, ¾W, 15 Turns	0338490094
R5	POT., 5K, 10%, ¾W, 4 Turns	0197510001
R6	POT., 25K, 10%, ¾W, 15 Turns	0338490094
R7	Resistor, 10K, 10%, ¼W	0170410005
R8	Resistor, 47K, 10%, ¼W	0171060008
R10	Resistor, 330, 5%, ¼W	0170910008
R12	Resistor, 2.7K, 10%, ¼W	0186670001
R13	Resistor, 270, 10%, ¼W	0178450006
R14	Resistor, 270, 10%, ¼W	0178450006
R15	Resistor, 470, 10%, ¼W	0184110009
R16	Resistor, 27K, 10%, ¼w	0171200004
R17	Resistor, 1K, 10%, ¼W	0171560001
R18	Resistor, 1K, 10%, ¼W	0171560001
R19	Resistor, 100k, 10%, ¼W	0170390004
R20	Resistor, 2.7K, 10%, ¼W	0186670001
R21	Resistor, 4.7K, 5%, ¼W	0170770001
R22	Resistor, 680, 10%, 1W	0197610005
R23	Resistor, 10K, 10%, ¼W	0170410005
R24	Resistor, 27K, 10%, ¼W	0171200004
R25	Resistor, 1K, 10%, ¼W	0171560001
R41	Resistor, 10K, 10%, ¼W	0170410005
T1	Transformer, PS, AC, PC Mtg.	0491680007
U1	IC Linear LM3905N	0448470004
U2	IC Linear SN7400N	0448070006
VR1	IC Linear MC7824CT	0448480000
	MISCELLANEOUS	
	Heatsink	0841760004
	Socket, Relay, 4PDT Contacts	0767120001
	Strap, Retainer Relay	0668080001

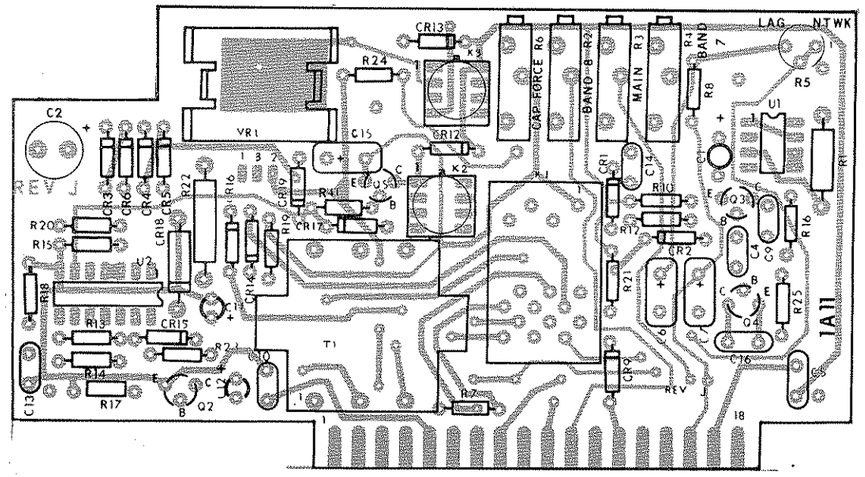

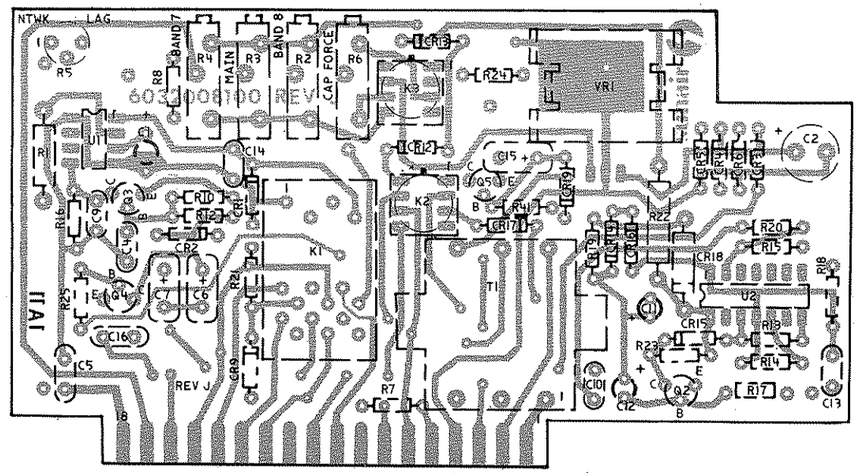

6032013073B

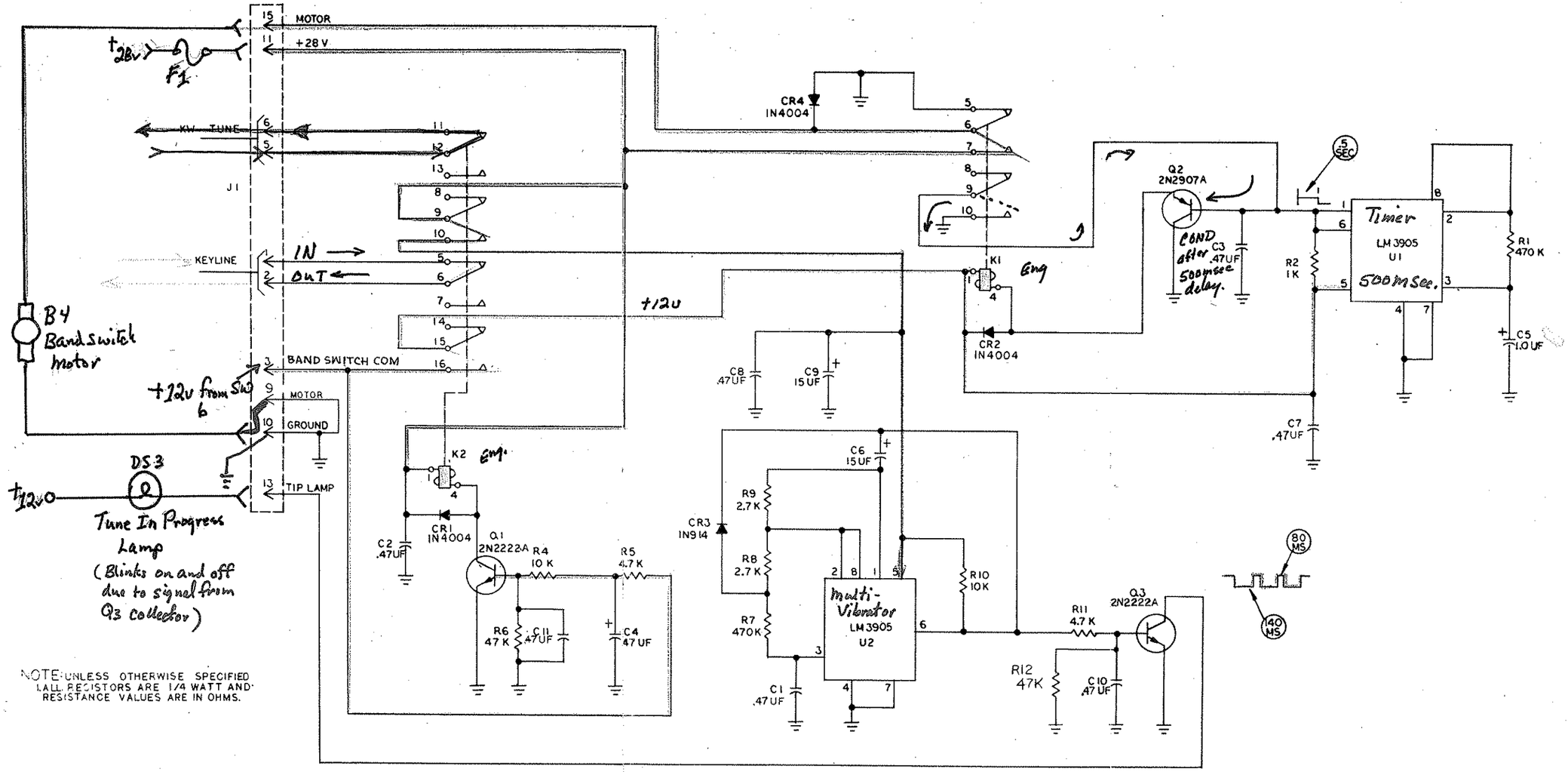

NOTE: UNLESS OTHERWISE SPECIFIED ALL RESISTORS ARE 1/4 WATT AND RESISTANCE VALUES ARE IN OHMS.

★ Purpose of Ckt

1. To open the keyline & the KW Tune Line before starting the band switch motor.
2. Closing the Keyline & KW Tune line after correct Band has been selected.

FIGURE 5-30 KEYLINE SEQUENCER (1A12) SCHEMATIC

TP 5-30
See Theory of Operation
Page 4-2B

6032013090A PC ASSY KEYLINE SEQUENCER 1A12

REF SYMBOL	DESCRIPTION	SUNAIR PART NO.
	PC ASSY KEYLINE SEQUENCER	6032013090
C1	Capacitor, 0.47µf, 50V, X7R, 20%	0283377771
C2	Capacitor, 0.47µf, 50V, X7R, 205	0283377771
C3	Capacitor, 0.47µf, 50V, X7R, 20%	0283377771
C4	Capacitor, 47µf, 20V, 196D	0281700001
C5	Capacitor, 1µf, 35V, T368	0283630001
C6	Capacitor, 15µf, 35V	0282240004
C7	Capacitor, 0.47µf, 50V, X7R, 20%	0283377771
C8	Capacitor, 0.47µf, 50V, X7R, 20%	0283377771
C9	Capacitor, 15µf, 35V	0282240004
C10	Capacitor, 0.47µf, 50V, X7R, 20%	0283377771
C11	Capacitor, 0.47µf, 50V, X7R, 20%	0283377771
CR1	Diode, Rectifier 1N4004	0405180004
CR2	Diode, Rectifier 1N4004	0405180004
CR3	Diode, Signal, Si. 1N914	0442900007
CR4	Diode, Rectifier, 1N4004	0405180004
K1	Relay, DPDT, 12V, Plug-in 3A	0666400008
K2	Relay, 4PDT, 24V, Plug-in 2A	0667930001
Q1	Transistor, NPN, Si. 2N2222A	0448580004
Q2	Transistor, PNP, Si. 2N2907A	0448390001
Q3	Transistor, NPN, Si. 2N2222A	0448580004
R1	Resistor, 470K, 10%, ¼W	0180570005
R2	Resistor, 1K, 10%, ¼W	0171560001
R3	Not Used	
R4	Resistor, 10K, 10%, ¼W	0170410005
R5	Resistor, 4.7K, 5%, ¼W	0170770001
R6	Resistor, 47K, 10%, ¼W	0171060008
R7	Resistor, 470K, 10%, ¼W	0180570005
R8	Resistor, 2.7K, 10%, ¼W	0186670001
R9	Resistor, 2.7K, 10%, ¼W	0186670001
R10	Resistor, 10K, 10%, ¼W	0170410005
R11	Resistor, 4.7K, 5%, ¼W	0170770001
R12	Resistor, 47K, 10%, ¼W	0171060008
U1	IC Linear, LM3905N	0448470004
U2	IC Linear, LM3905N	0448470004
XK1	Socket, Relay, DPDT, Contacts	0666140006
XK2	Socket, Relay, 4PDT, Contacts	0767120001
	MISCELLANEOUS	
	Connector, PC, 15 Pin Male	0754150003

Keyline Sequencer

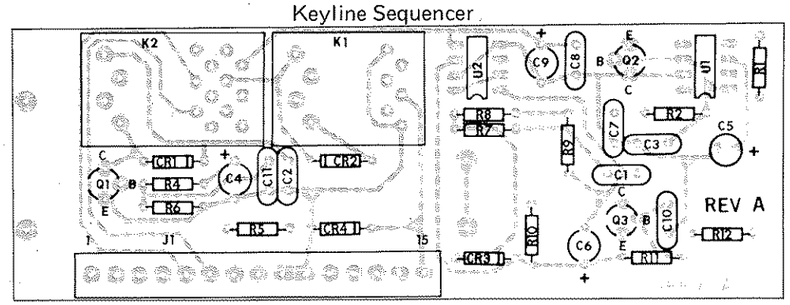

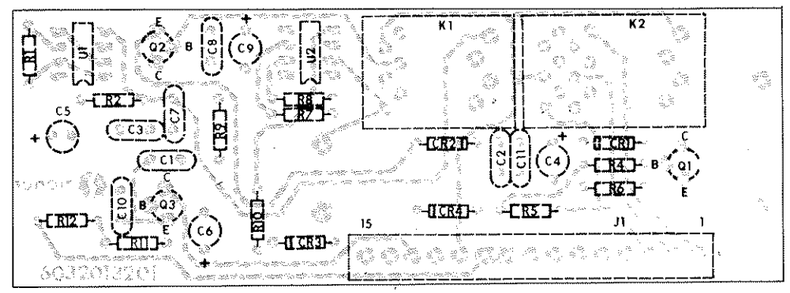

1. ALC CKT
2. Keyline Comparator
3. Line Voltage Comparator
4. KW Tune Comparator
5. Plate Comparator
6. Drive Power Comparator
7. Tune Fault Lamp CKT
8. IB Comparator.

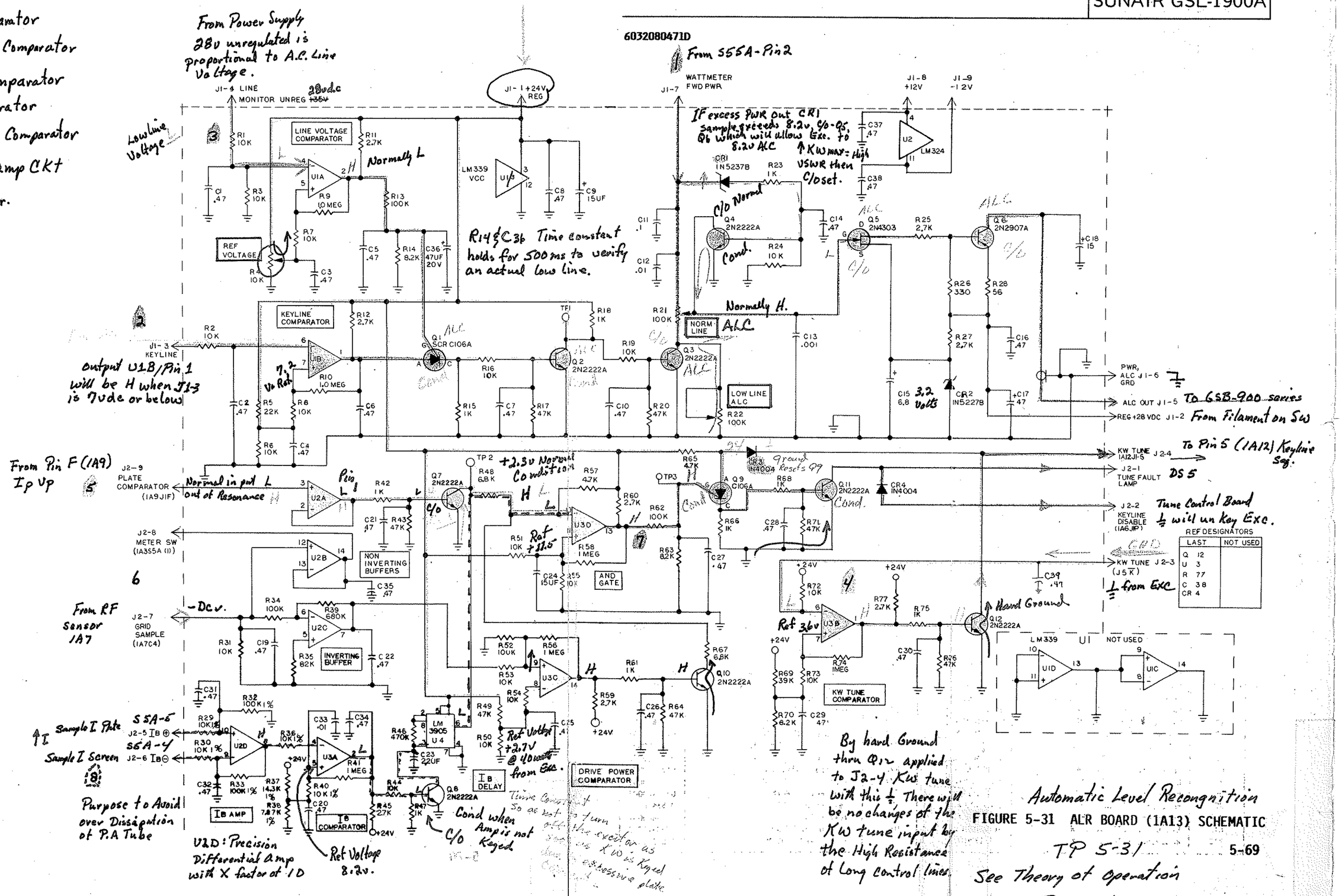

FIGURE 5-31 ALR BOARD (1A13) SCHEMATIC

TP 5-31

See Theory of Operation Page 4-15

6032080498C ALR BOARD ASSY 1A13

REF SYMBOL	DESCRIPTION	SUNAIR PART NO.
	ALR BOARD ASSY	6032080498
C1	Capacitor, 0.47µf, 50V, X7R, 20%	0283377771
C2	Capacitor, 0.47µf, 50V, X7R, 20%	0283377771
C3	Capacitor, 0.47µf, 50V, X7R, 20%	0283377771
C4	Capacitor, 0.47µf, 50V, X7R, 20%	0283377771
C5	Capacitor, 0.47µf, 50V, X7R, 20%	0283377771
C6	Capacitor, 0.47µf, 50V, X7R, 20%	0283377771
C7	Capacitor, 0.47µf, 50V, X7R, 20%	0283377771
C8	Capacitor, 0.47µf, 50V, X7R, 20%	0283377771
C9	Capacitor, 15µf, 35V	0282240004
C10	Capacitor, 0.47µf, 50V, X7R, 20%	0283377771
C11	Capacitor, 0.1µf, 50V, X7R, 20%	0281610002
C12	Capacitor, 0.01µf, 50V, X7R, 20%	0281730008
C13	Capacitor, 0.001µf, 100V, X5E, 10%	0282080007
C14	Capacitor, 0.47µf, 50V, X7R, 20%	0283377771
C15	Capacitor, 6.8µf, 20V, T368	0296780006
C16	Capacitor, 0.47µf, 50V, X7R, 20%	0283377771
C17	Capacitor, 47µf, 35V	0282190007
C18	Capacitor, 15µf, 35V	0282240004
C19	Capacitor, 0.47µf, 50V, X7R, 20%	0283377771
C20	Capacitor, 0.47µf, 50V, X7R, 20%	0283377771
C21	Capacitor, 0.47µf, 50V, X7R, 20%	0283377771
C22	Capacitor, 0.47µf, 50V, X7R, 20%	0283377771
C23	Capacitor, 2.2µf, 15V, T368	0296420000
C24	Capacitor, 15µf, 15V, 196D	0281720002
C25	Capacitor, 0.47µf, 50V, X7R, 20%	0283377771
C26	Capacitor, 0.47µf, 50V, X7R, 20%	0283377771
C27	Capacitor, 0.47µf, 50V, X7R, 20%	0283377771
C28	Capacitor, 0.47µf, 50V, X7R, 20%	0283377771
C29	Capacitor, 0.47µf, 50V, X7R, 20%	0283377771
C30	Capacitor, 0.47µf, 50V, X7R, 20%	0283377771
C31	Capacitor, 0.47µf, 50V, X7R, 20%	0283377771
C32	Capacitor, 0.47µf, 50V, X7R, 20%	0283377771
C33	Capacitor, 0.01µf, 50V, X7R, 20%	0281730008
C34	Capacitor, 0.47µf, 50V, X7R, 20%	0283377771
C35	Capacitor, 0.47µf, 50V, X7R, 20%	0283377771
C36	Capacitor, 47µf, 20V, 196D	0281700001
C37	Capacitor, 0.47µf, 50V, X7R, 20%	0283377771
C38	Capacitor, 0.47µf, 50V, X7R, 20%	0283377771
C39	Capacitor, 0.47µf, 50V, X7R, 20%	0283377771
CR1	Diode, Zener 1N5237B	0405240007
CR2	Diode, Zener 1N5227B	0405250002
CR3	Diode, Rectifier 1N4004	0405180004
CR4	Diode, Rectifier 1N4004	0405180004
J1	Connector, Molex, 9 Pin PC MT.	1001010035
J2	Connector, Molex, 9 Pin PC MT.	1001010035
Q1	Diode, SCR C106A2	0447070002
Q2	Transistor, NPN, Si. 2N2222A	0448580004
Q3	Transistor, NPN, Si. 2N2222A	0448580004
Q4	Transistor, NPN, Si. 2N2222A	0448580004
Q5	Transistor, N-CH, FET 2N4303	0443930007
Q6	Transistor, PNP, Si. 2N2907A	0448390001
Q7	Transistor, NPN, Si. 2N2222A	0448580004
Q8	Transistor, NPN, Si. 2N2222A	0448580004
Q9	Diode, SCR, C106A2	0447070002
Q10	Transistor, NPN, Si. 2N2222A	0448580004
Q11	Transistor, NPN, Si. 2N2222A	0448580004
Q12	Transistor, NPN, Si. 2N2222A	0448580004
R1	Resistor, 10K, 10%, ¼W	0170410005
R2	Resistor, 10K, 10%, ¼W	0170410005
R3	Resistor, 10K, 10%, ¼W	0170410005
R4	POT., 10K, 10%, ¼W, 15Turns	0338490043
R5	Resistor, 22K, 5%, ¼W	0172230004
R6	Resistor, 10K, 10%, ¼W	0170410005
R7	Resistor, 10K, 10%, ¼W	0170410005
R8	Resistor, 10K, 10%, ¼W	0170410005
R9	Resistor, 1M, 10%, ¼W	0170650006
R10	Resistor, 1M, 10%, ¼W	0170650006
R11	Resistor, 2.7K, 10%, ¼W	0186670001
R12	Resistor, 2.7K, 10%, ¼W	0186670001

REF SYMBOL	DESCRIPTION	SUNAIR PART NO.
R13	Resistor, 100K, 10%, ¼W	0170390004
R14	Resistor, 8.2K, 5%, ¼W	0192070002
R15	Resistor, 1K, 10%, ¼W	0171560001
R16	Resistor, 10K, 10%, ¼W	0170410005
R17	Resistor, 47K, 10%, ¼W	0171060008
R18	Resistor, 1K, 10%, ¼W	0171560001
R19	Resistor, 10K, 10%, ¼W	0170410005
R20	Resistor, 47K, 10%, ¼W	0171060008
R21	POT., 100K, 10%, ¾W, 15 Turns	0338490051
R22	POT., 100K, 10%, ¾W, 15 Turns	0338490051
R23	Resistor, 1K, 10%, ¼W	0171560001
R24	Resistor, 10K, 10%, ¼W	0170410005
R25	Resistor, 2.7K, 10%, ¼W	0186670001
R26	Resistor, 330, 5%, ¼W	0170910008
R27	Resistor, 2.7K, 10%, ¼W	0186670001
R28	Resistor, 56, 10%, ¼W	0174290004
R29	Resistor, 10K, 1%, 1/8W	1003050026
R30	Resistor, 10K, 1%, 1/8W	1003050026
R31	Resistor, 10K, 10%, ¼W	0170410005
R32	Resistor, 100K, 1/8W, 1%	1001030036
R33	Resistor, 100K, 1/8W, 1%	1001030036
R34	Resistor, 100K, 10%, ¼W	0170390004
R35	Resistor, 82K, 10%, ¼W	0171680006
R36	Resistor, 10K, 1%, 1/8W	1003050026
R37	Resistor, 14.3K, 1%, 1/8W	1004090013
R38	Resistor, 7.87K, 1%, 1/8W	1004090021
R39	Resistor, 680K, 10%, ¼W	0181480000
R40	Resistor, 10K, 1%, 1/8W	1003050026
R41	Resistor, 1M, 10%, ¼W	0170650006
R42	Resistor, 1K, 10%, ¼W	0171560001
R43	Resistor, 47K, 10%, ¼W	0171060008
R44	Resistor, 10K, 10%, ¼W	0170410005
R45	Resistor, 2.7K, 10%, ¼W	0186670001
R46	Resistor, 470K, 10%, ¼W	0180570005
R47	Resistor, 1K, 10%, ¼W	0171560001
R48	Resistor, 6.8K, 5%, ¼W	0174810008
R49	Resistor, 47K, 10%, ¼W	0171060008
R50	Resistor, 10K, 10%, ¼W	0170410005
R51	Resistor, 10K, 10%, ¼W	0170410005
R52	Resistor, 100K, 10%, ¼W	0170390004
R53	Resistor, 10K, 10%, ¼W	0170410005
R54	Resistor, 10K, 10%, ¼W	0170410005
R55	Resistor, 10K, 10%, ¼W	0170410005
R56	Resistor, 1M, 10%, ¼W	0170650006
R57	Resistor, 4.7K, 5%, ¼W	0170770001
R58	Resistor, 1M, 10%, ¼W	0170650006
R59	Resistor, 2.7K, 10%, ¼W	0186670001
R60	Resistor, 2.7K, 10%, ¼W	0186670001
R61	Resistor, 1K, 10%, ¼W	0171560001
R62	Resistor, 100K, 10%, ¼W	0170390004
R63	Resistor, 8.2K, 55, ¼W	0192070002
R64	Resistor, 47K, 10%, ¼W	0171060008
R65	Resistor, 4.7K, 5%, ¼W	0170770001
R66	Resistor, 1K, 10%, ¼W	0171560001
R67	Resistor, 6.8K, 5%, ¼W	0174810008
R68	Resistor, 1K, 10%, ¼W	0171560001
R69	Resistor, 39K, 10%, ¼W	0177800003
R70	Resistor, 8.2K, 5%, ¼W	0192070002
R71	Resistor, 47K, 10%, ¼W	0171060008
R72	Resistor, 10K, 10%, ¼W	0170410005
R73	Resistor, 10K, 10%, ¼W	0170410005
R74	Resistor, 1M, 10%, ¼W	0170650006
R75	Resistor, 1K, 10%, ¼W	0171560001
R76	Resistor, 47K, 10%, ¼W	0171060008
R77	Resistor, 2.7K, 10%, ¼W	0186670001
TP1	Test Point, White	0753640007
TP2	Test Point, White	0753640007
TP3	Test Point, White	0753640007
U1	IC Linear, LM339N	1003970028
U2	IC Linear, LM324N	1003970001

SUNAIR GSL-1900A

REF SYMBOL	DESCRIPTION	SUNAIR PART NO.
U3	IC Linear, LM339N	1003970028
U4	IC Linear, LM3905N	0448470004

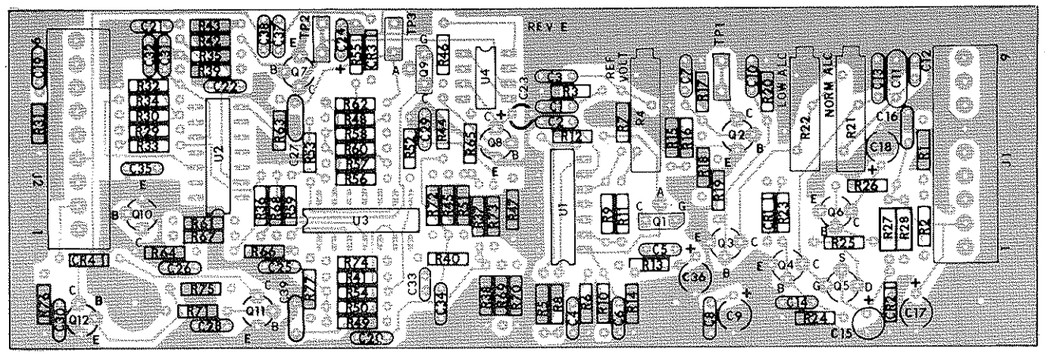

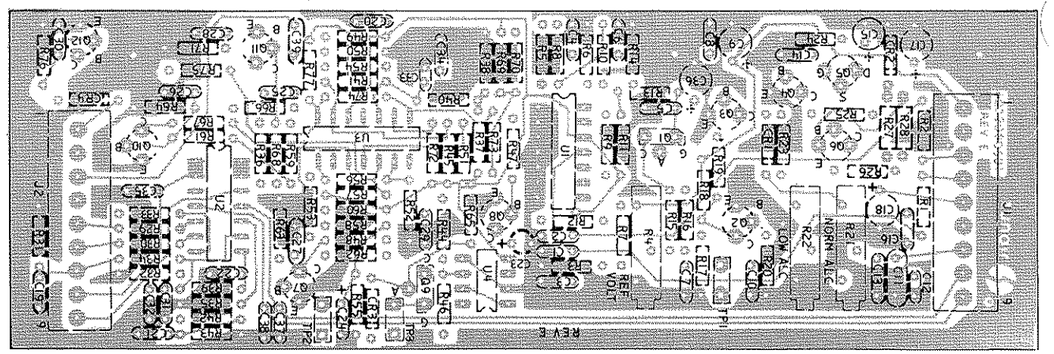

6032240070H

1. +28 Volts Unregulated
2. Plate Voltage
3. Screen Voltage
4. Crowbar ckt
5. High Voltage Protection.
6. Cathode voltage

NOTES:
1. JUMPERS FOR 230VAC OPERATION SHOWN ON 2TB1 AND 2T1.
   FOR 115VAC OPERATION:
   a. REMOVE JUMPERS 2TB1-2 TO -3 AND 2T1-H3 TO -H5.
   b. ADD JUMPERS 2TB1-1 TO -2, -3 TO -4 AND 2T1-H3 TO -H7, -H1 TO -H5.
2. ALL RELAYS SHOWN IN DE-ENERGIZED POSITION.
3. FUSE AMPERAGE SHOWN FOR 230VAC OPERATION.
   FOR 115VAC OPERATION:
   a. CHANGE 2F3 AND 2F4 TO 10 AMP
   d. CHANGE 2F1 AND 2F2 TO 30 AMP
4. WIRES MARKED WITH ⊗ ON TRANSFORMERS 2T1 AND 2T2 MUST BE MOVED TO THEIR PROPER POINTS (HI-127, LOW-104) FOR HI LINE OR LOW LINE OPERATION.

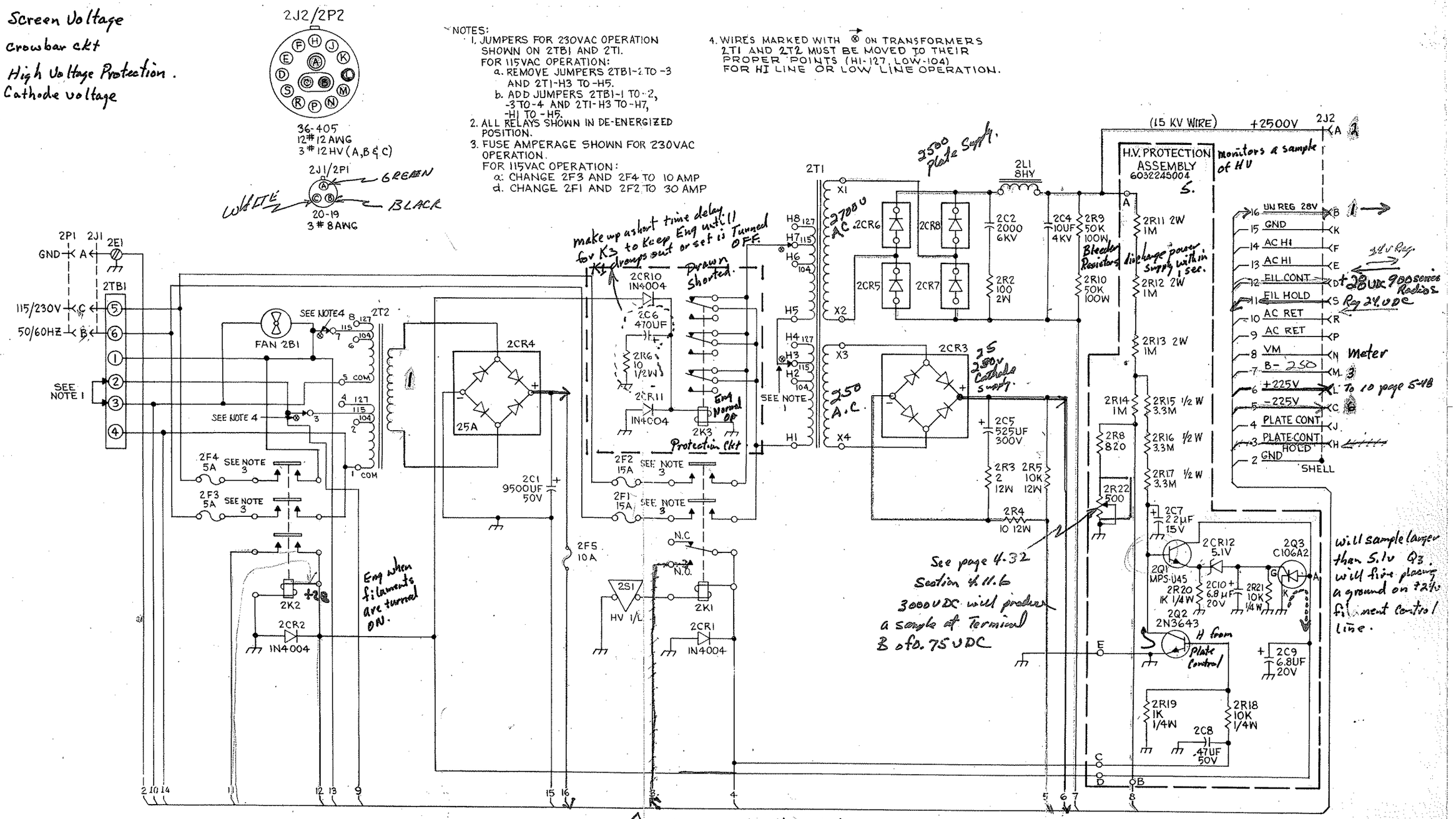

4 Crowbar ckt: K3 Protection ckt will blow F1 & F2 if Plate Contactor sticks.

FIGURE 5-32 POWER SUPPLY PS-1900A

TP 5-32

6032200OXXF FINAL ASSY PS

REF SYMBOL	DESCRIPTION	SUNAIR PART NO.
	FINAL ASSY PS	6032200OXX
2B1	Fan, 115 VAC 50/60 Cycle	0715940007
2C2	Capacitor, .002µf, 6KV, Z5U	0289110009
2CR1	Diode, Rectifier 1N4004	0405180004
2L1	Reactor 8 Hy	5025210402
2T1	Plate Transformer	6032300102
2XF1	Fuseholder, Panel Mount	0849910005
2XF2	Fuseholder, Panel Mount	0849910005
2XF3	Fuseholder, Panel Mount	0849910005
2XF4	Fuseholder, Panel Mount	0849910005
2XF5	Fuseholder, Indicating	1004880006

60320024XXD TESTED ASSY PS

REF SYMBOL	DESCRIPTION	SUNAIR PART NO.
	TESTED ASSY PS	60320024XX
	230V	
2F1	Fuse, MDA, 15 Amp, 250V	0841330000
2F2	Fuse, MDA, 15 Amp, 250V	0841330000
2F3	Fuse, ABC, 5 Amp, 250V	0841320004
2F4	Fuse, ABC, 5 Amp, 250V	0841320004
2F5	Fuse, AGC, 10 Amp, 32V	0848860004
	115V	
2F1	Fuse, MDA, 30 Amp, 250V	1002550025
2F2	Fuse, MDA, 30 Amp, 250V	1002550025
2F3	Fuse, ABC, 10 Amp, 250V	1002550017
2F4	Fuse, ABC, 10 Amp, 250V	1002550017
2F5	Fuse, AGC, 10 Amp, 32V	0848860004

6032220095P PARTITION ASSY PS

REF SYMBOL	DESCRIPTION	SUNAIR PART NO.
	PARTITION ASSY PS	6032220095
2C5	Capacitor, 525µf, 300V, CG	0282900004
2C6	Capacitor, 470µf, 50V, Tal	0280890001
CR5	Diode, Rectifier VC80	0404390005
CR6	Diode, Rectifier VC80	0404390005
CR7	Diode, Rectifier VC80	0404390005
CR8	Diode, Rectifier VC80	0404390005
2CR2	Diode, Rectifier 1N4004	0405180004
2CR3	Diode, Bridge VS847TT	0405540001
2CR10	Diode, Rectifier 1N4004	0405180004
2CR11	Diode, Rectifier 1N4004	0405180004
2K2	Relay, 3PDT, 24V, General 10A	6032071901
2K3	Relay, 3PDT, 24V, General 10A	6032071901
2R3	Resistor, 2, 5%, 12W	0197250009
2R4	Resistor, 10, 55, 12W	0191920002
2R5	Resistor, 10K, 5%, 12W	0197300006
2R6	Resistor, 10, 10%, ½W	0185380000

60322300XXAB PS RT PNL ASSY

REF SYMBOL	DESCRIPTION	SUNAIR PART NO.
	PS RT PNL ASSY	60322300XX
2C1	Capacitor, 9500pf, 50V, CG	0281470006
2C4	Capacitor, 10µf, 4000V ADC	0282030000
2CR4	Diode Bridge SCBA-2	1002650020
2K1	Relay, DPST, 24V, 30A, Aux SPDT	1003430007
2R2	Resistor, 100, 10%, 2W	0163600007
2R9	Resistor, 50K, 5%, 100W	0197270000
2R10	Resistor, 50K, 5%, 100W	0197270000
2S1	Switch, Pushbutton, SPST	0346280001
2T2	Transformer, 230VAC-24VAC	1004800029

6032240096G HARNESS POWER SUPPLY

REF SYMBOL	DESCRIPTION	SUNAIR PART NO.
	HARNESS POWER SUPPLY	6032240096
2J1	Connector, Power, 3 Pin Round	0754240002
2J2	Connector, Power, 15 Pin Round	0754280004

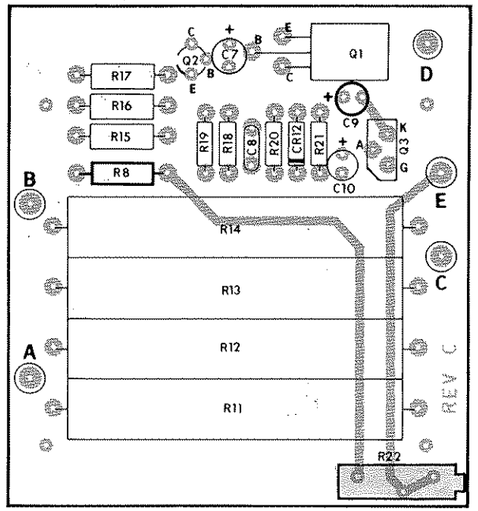

6032245004D HIGH VOLTAGE PROTECTION ASSY

REF SYMBOL	DESCRIPTION	SUNAIR PART NO.
	HIGH VOLTAGE PROTECTION ASSY	6032245004
C7	Capacitor, 22µf, 15V, T368	0296660001
C8	Capacitor, 0.47µf, 50V, X5V, 20%	0283370009
C9	Capacitor, 6.8µf, 20V, T368	0296780006
C10	Capacitor, 6.8 µf, 20V, T368	0296780006
CR12	Diode, Zener 1N5231B	0405390009
Q1	Transistor, NPN, Si. MPSU45	0448570009
Q2	Transistor, NPN, Si. 2N3643	0443310009
Q3	Diode, SCR C106A2	0447070002
R8	Resistor, 820, 10%, ½W	0175600007
R11	Resistor, 1M, 1%, 2W	0197280005
R12	Resistor, 1M, 1%, 2W	0197280005
R13	Resistor, 1M, 1%, 2W	0197280005
R14	Resistor, 1M, 1%, 2W	0197280005
R15	Resistor, 3.3M, 5%, ½W	1004790023
R16	Resistor, 3.3M, 5%, ½W	1004790023
R17	Resistor, 3.3M, 5%, ½W	1004790023
R18	Resistor, 10K, 10%, ¼W	0170410005
R19	Resistor, 1K, 10%, ¼W	0171560001
R20	Resistor, 1K, 10%, ¼w	0171560001
R21	Resistor, 10K, 10%, ¼W	0170410005
R22	POT., 500, 10%, ¾W, 15 Turns	0338490078

8043050074D

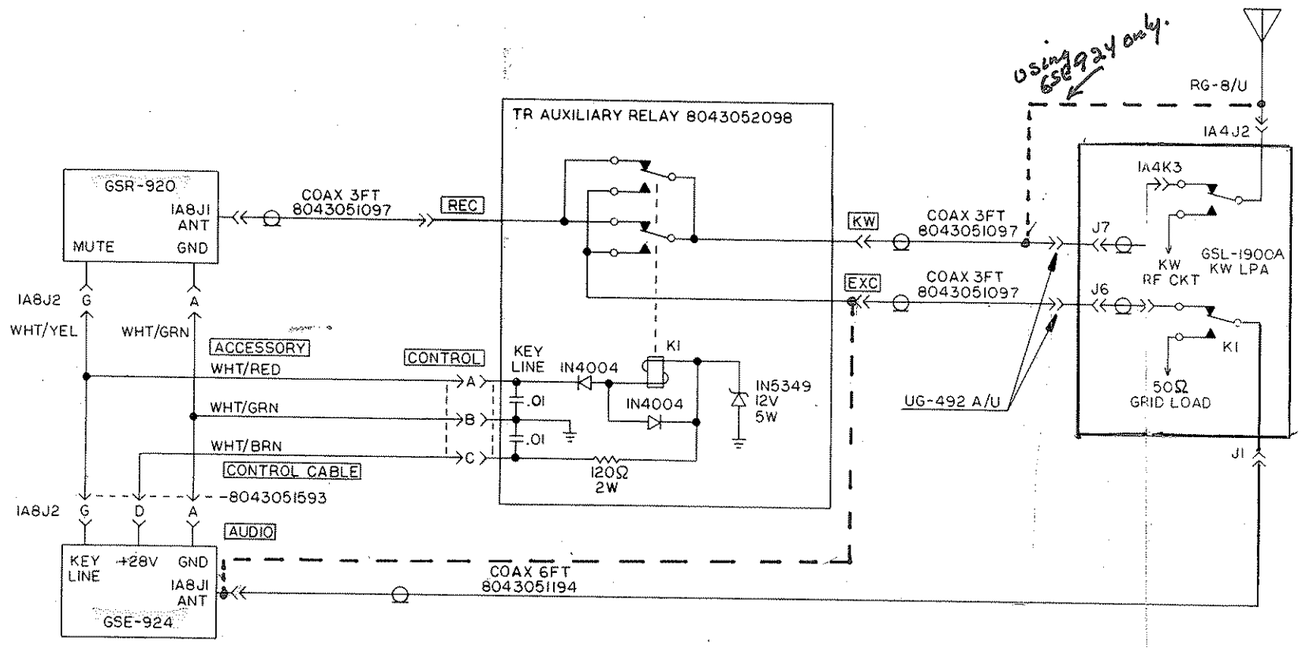

NOTES: 1. CABLE LENGTHS ARE FOR A STANDARD RACK OR STACK MOUNT INSTALLATION.

8043052093D TR RELAY BOX ASSY

REF SYMBOL	DESCRIPTION	SUNAIR PART NO.
	TR RELAY BOX ASSY	8043052093
C1	Capacitor, 0.01µf, 1000V, Z5U, 20%	0243550006
CR1	Diode, Rectifier 1N4004	0405180004
CR2	Diode, Zener 1N5349A	0405380003
K1	Relay, DPDT, 12V, Antenna 5A	0667310002
R1	Resistor, 120, 10%, 2W	0194530001
	MISCELLANEOUS	
	Box, T/R Relay Box	8043096503
	Connector, Power, 4 Pin Round	0754810003
	Connector, RF, BNC UG-1094/U	0743740009

8043050091B T/R AUX RELAY KIT

REF SYMBOL	DESCRIPTION	SUNAIR PART NO.
	Connector, RF, BNC, UG-492A/U, 2 ea.	1000170004
	Control Cable, T/R Relay Assy, 1 ea.	8043051593
	Installation Diagram T/R Relay, 1 ea	8043050074
	RG-58A/U Assy BNC/BNC 1 FT, 1 ea.	8043051291
	RG-58A/U Assy BNC/BNC 3 FT, 3 ea.	8043051097
	RG-58A/U Assy UHF/UHF 6 FT, 1 ea.	8043051291
	T/R Relay Box Assy	8043052093

FIGURE 5-33 TR AUXILIARY RELAY SCHEMATIC

Rev	ECN
A	6082
B	P1035
C	1035-A
D	P903
E	P3031

Drawn By: G.D.L.

SUNAIR electronics inc.

Title: G.S.L. 1000 COVER ASS'Y

I.E.: V. Gomez

P.E.:

C.E.:

Date: 4-6-77

Drawing No. PD 6032007057 PD 6032007090

Pg. 2 of 3

Rev. Date: 11-13-77

Rev. E

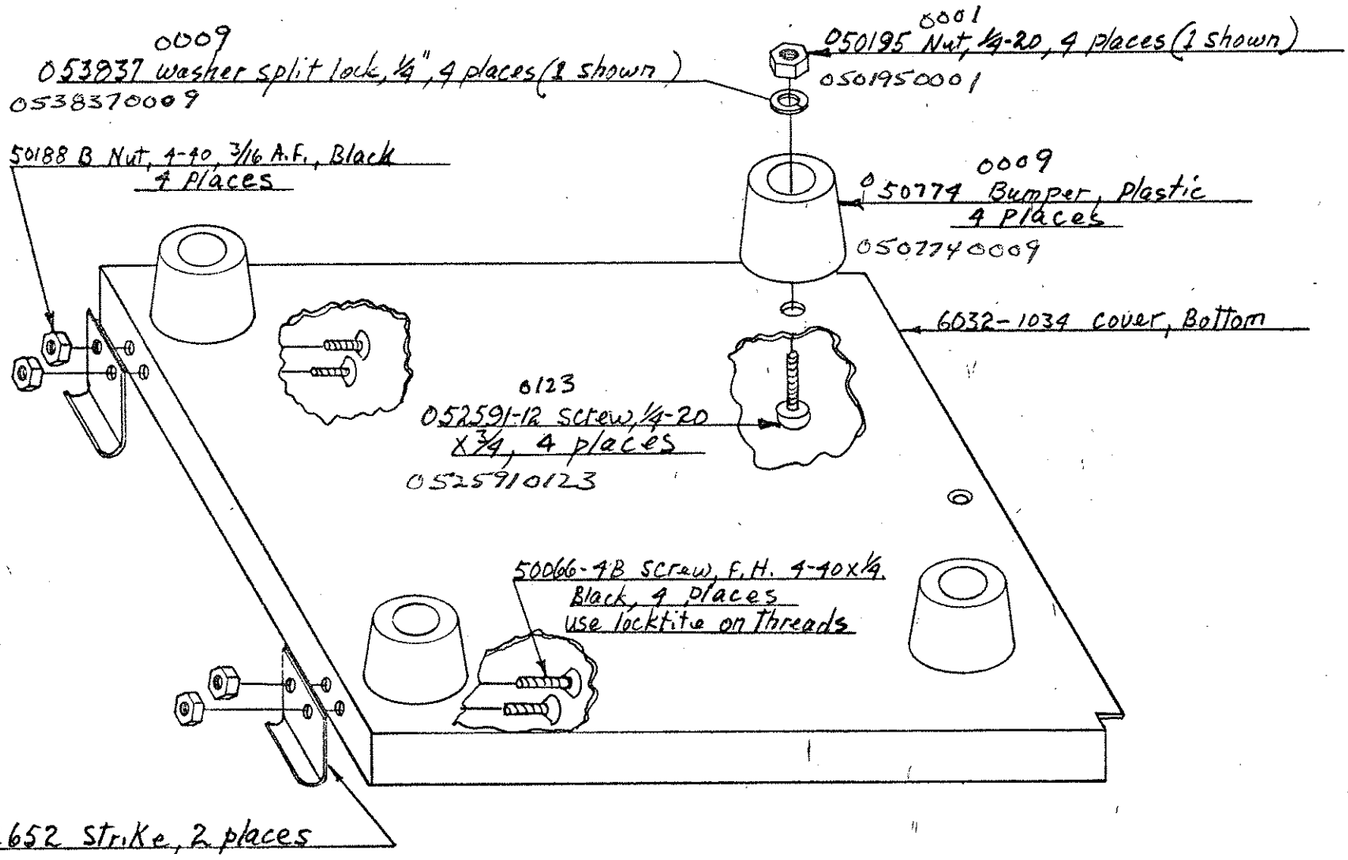

NOTE!
SEE B/m 6032002250/72 for LPA

0507750004

SECTION VI

ILLUSTRATED PARTS BREAKDOWN

6.1 GENERAL

This section has been designed to aid you in your repair and maintenance of your GSL-1900A. It will assist you in identifying and ordering parts and when disassembling or assembling your unit. Each major assembly and chassis component has been called out. On the page following each drawing you will find the corresponding parts list.

6.2 LIST OF ILLUSTRATIONS

FIGURE #	TITLE	PAGE
6.1	GSL-1900A Power Amplifier (2 sheets)	6-2
6.2	LPA-1900A Power Amplifier (2 sheets)	6-6
6.3	Front Panel Assembly (2 sheets)	6-10
6.4	Rear Panel Assembly (1 sheet)	6-14
6.5	Right Panel Assembly (1 sheet)	6-16
6.6	RF Chassis Assembly (10 sheets)	6-18
6.7	Chassis Subassembly (4 sheets)	6-38
6.8	Main Harness (1 sheet)	6-46
6.9	Servo Amplifier Circuit Card Assembly (1 sheet)	6-48
6.10	Plenum Assembly (1 sheet)	6-50
6.11	RF Wattmeter Assembly (2 sheets)	6-52
6.12	Tuning Capacitor Assembly (1 sheet)	6-56
6.13	PS-1900A Power Supply (1 sheet)	6-58
6.14	Power Supply Final Assembly (3 sheets)	6-60
6.15	Power Supply Harness (1 sheet)	6-66
6.16	Right Hand Panel Assembly (2 sheets)	6-68
6.17	Power Supply Partition Assembly (1 sheet)	6-72
6.18	KW Control Unit (1 sheet)	6-74

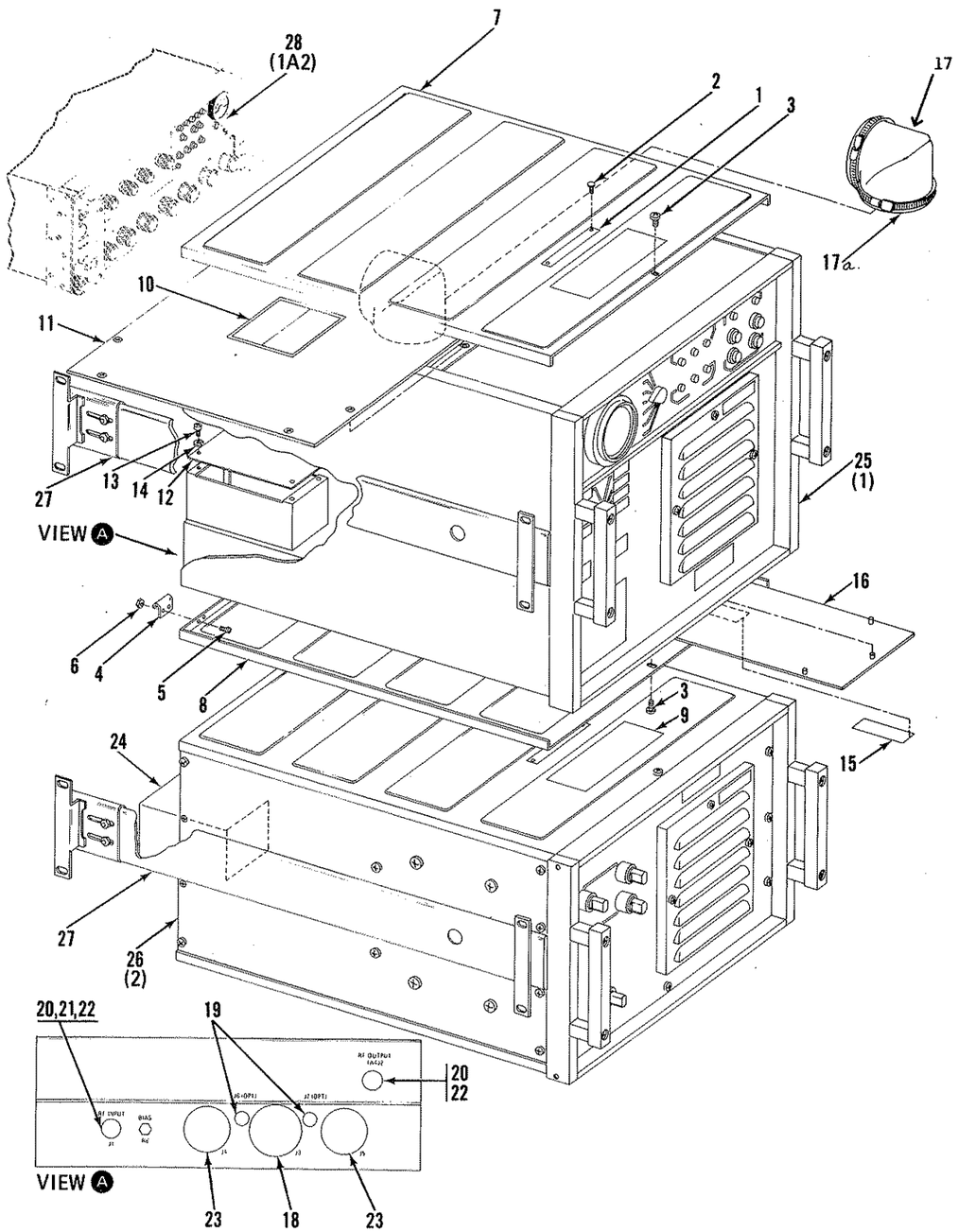

FIGURE 6-1 GSL-1900A POWER AMPLIFIER (SHEET 1 of 2)

FIGURE 6-1 GSL-1900A POWER AMPLIFIER SHEET 1

ITEM NO	SUNAIR PART NUMBER	DESCRIPTION
	60320070XX	COVER ASSEMBLY
1	0107810000	LABEL, Warning, High Voltage
2	0533180007	PIN, Drive No. 0 x 1/8 Lg.
3	0501230629	SCREW, Machine, TR HD 6-32 x 3/8 Lg. Blk.
4	0526520001	STRIKE, Black
5	0500660425	SCREW, Machine FH. 4-40 x 1/4 Lg. Blk.
6	05018800XX	NUT, Hex 4-40 x 3/16 AF Blk.
7	60321033XX	COVER, Top
8	60321034XX	COVER, Bottom
9	6032050408	LABEL, System Alignment
10	1003030009	LABEL, Warning Hi-Voltage
11	6032101606	COVER, RF
12	6032020207	COVER, Wattmeter
13	0500850046	SCREW, Machine PH 4-40 x 1/4 Lg.
14	0500020001	WASHER, Lock #4
15	0841130001	LABEL, Warning, AC
16	6032101703	COVER, Plenum
17	1003450016	VENT, Air, Rubber Boot
17a	0521270006	CLAMP, Hose Size 28
18	1004960034	CAP, Protective, dust
19	0508260001	CAP, Protective, dust
20	0508270006	CAP, Protective, dust
21	0742070000	CONNECTOR, UG175U Adapter, RF, For PL-259
22	0742190005	CONNECTOR, RF, UHF PL-259
23	0508740002	CAP, Protective, dust
24	1004720009	LABEL, Voltage connection
25	60320100XX	POWER AMPLIFIER, LPA-1900A
26	60320024XX	POWER SUPPLY, PS-1900A
27	60320903XX	RACKMOUNT KIT
28	60324000XX	CONTROL UNIT, KW

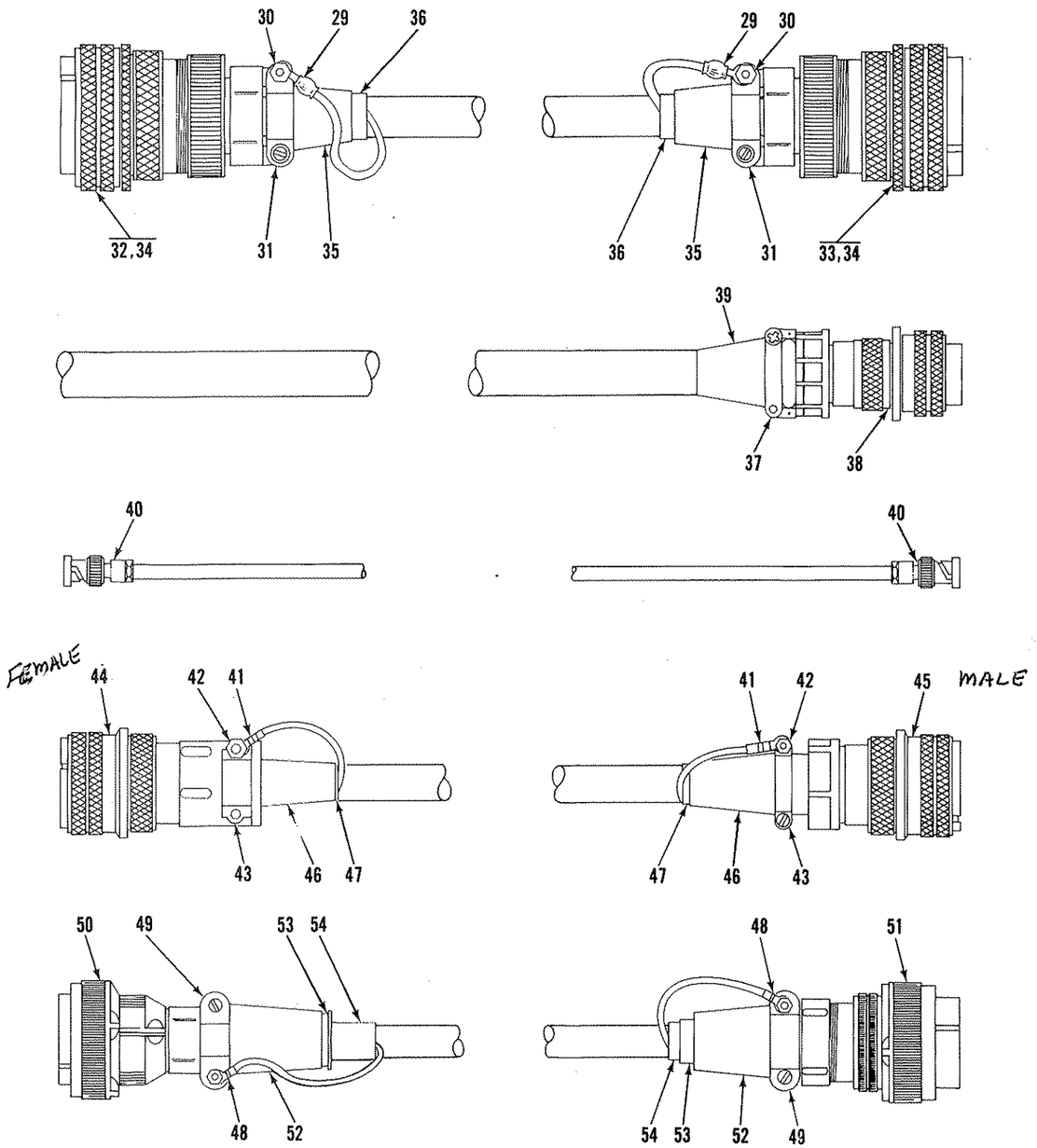

FIGURE 6-1 GSL-1900A POWER AMPLIFIER (SHEET 2 of 2)

FIGURE 6-1 GSL-1900A POWER AMPLIFIER SHEET 2

ITEM NO	SUNAIR PART NUMBER	DESCRIPTION
	6032650090	CABLE ASSY, Control
29	0516950002	TERMINAL, Crimp, No. 10 Insul.
30	0502700009	NUT, Hex 8-32 x 5/16 AF
31	0754570002	CLAMP, Cable, connector
32	0754220001	CONNECTOR, PWR 15 Pin Round
33	0754290000	CONNECTOR, PWR 15 Pin Round
34	1001090039	ADAPTER, Reducing, connector
35	0700550071	BUSHING, Rubber
36	0700550062	BUSHING, Rubber
	6032660095	CABLE ASSY, Power
37	0754270009	CLAMP, Cable, connector
38	0754250008	CONNECTOR, Plug, electrical
39	0700550062	BUSHING, Rubber
	8043051291	CABLE ASSY, RG-58 A/U
40	0744030005	CONNECTOR, RF, BNC UG88/RU
	6029003003	CABLE ASSY, LPA TO Coupler
41	0539540005	TERMINAL, Lug
42	0502700009	NUT, HEX 8-32 x 5/16 AF
43	0754570002	CLAMP, Cable, connector
44	0754020002	CONNECTOR, PWR 12 Pin Round (FEMALE)
45	0754340007	CONNECTOR, PWR 12 Pin Round (MALE)
46	0700550071	BUSHING, Rubber
47	0700550062	BUSHING, Rubber
	1002680026	CABLE ASSY, Exciter to LPA
48	0502450002	TERMINAL, Lug, Plain #8
49	0754570002	CLAMP, Cable, connector
50	0754320006	CONNECTOR, PWR 37 Pin Round
51	0754690008	CONNECTOR, PWR 37 Pin Round
52	0700550071	BUSHING, Rubber
53	0700550062	BUSHING, Rubber
54	0700550054	BUSHING, Rubber

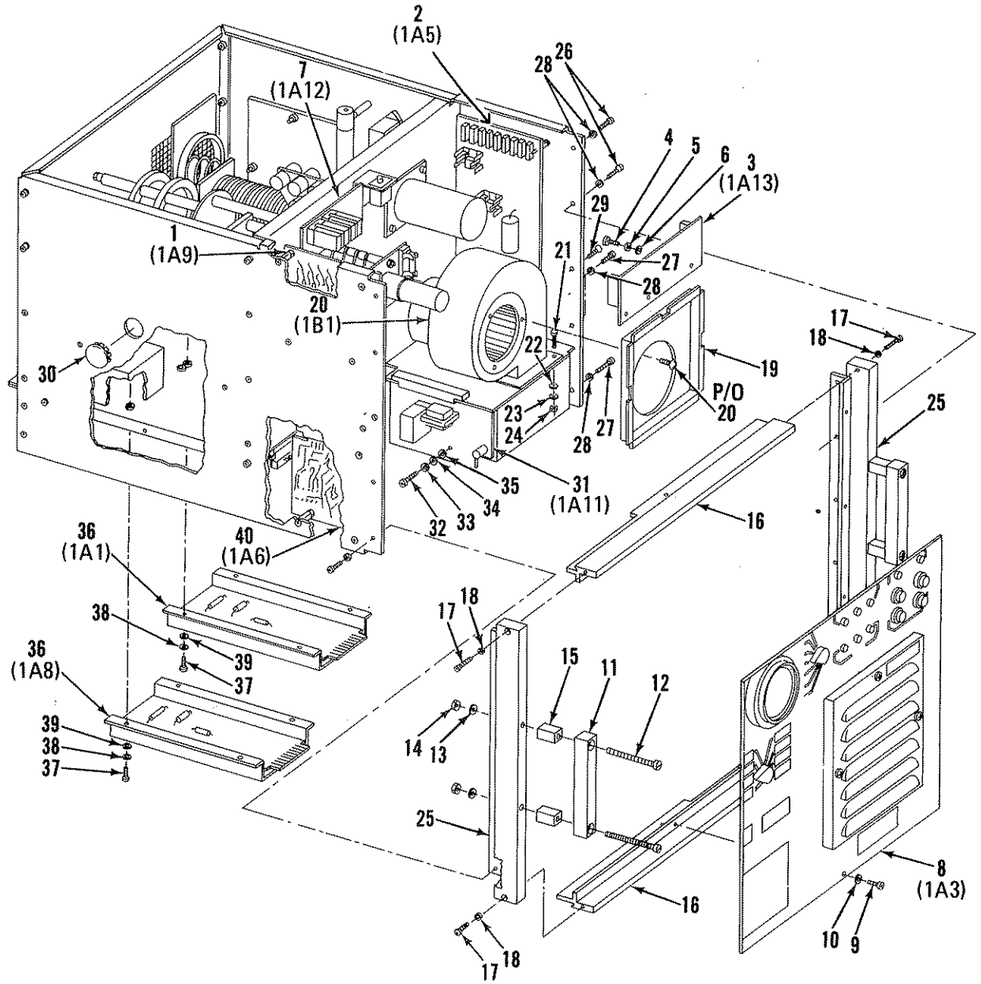

FIGURE 6-2 LPA-1900A POWER AMPLIFIER (SHEET 1 of 2)

FIGURE 6-2 LPA-1900A POWER AMPLIFIER SHEET 1

ITEM NO	SUNAIR PART NUMBER	DESCRIPTION
	60320100XX	POWER AMPLIFIER, LPA-1900A
1	6032006590	CIRCUIT CARD ASSEMBLY, Level Control 1A9
2	6032003094	CIRCUIT CARD ASSEMBLY, Regulator 1A5
3	6032080498	CIRCUIT CARD ASSEMBLY, ALR 1A13
4	0500850054	SCREW, Machine PH 4-40 x 5/16 Lg.
5	0500020001	WASHER, Lock #4
6	0502560002	WASHER, Flat #4
7	6032013090	CIRCUIT CARD ASSEMBLY, Keyline Sequencer 1A12
8	60320110XX	FRONT PANEL ASSEMBLY, 1A3
9	0500890625	SCREW, Machine PH 6/32 x 3/8 Lg. Blk.
10	0500040028	WASHER, Lock #6 Blk.
11	6032202003	HANDLE
12	0525904026	SCREW, Machine FIL H 1/4-20, 2 1/2 Lg. Blk.
13	0538370007	WASHER, Lock 1/4 Blk.
14	0501950028	NUT, Hex 1/4-20 x 7/16 AF Blk.
15	6032202101	SPACER, Handle
16	60321019XX	FRAME, Front
17	0500851221	SCREW, Machine 4-40 PH x 3/4 Lg. Blk.
18	0500020027	WASHER, Lock #4 Blk.
19	6032102106	SHROUD, Blower
20	6032071006	BLOWER, 138 CFM, 115V/50-60 Hz
21	0500940088	SCREW, Machine PH 10-32 x 1/2 Lg.
22	0500220000	WASHER, Flat #10
23	0500070008	WASHER, Lock #10
24	0501940006	NUT, Hex 10-32 x 3/8 AF
25	60321020XX	FRAME, Front
26	0500910626	SCREW, Machine PH 8-32 x 3/8 Lg. Blk.
27	0500911029	SCREW, Machine PH 8-32 x 5/8 Lg. Blk.
28	0500060029	WASHER, Lock #8 Blk.
29	0500730628	SCREW, Machine FH 8-32 x 3/8 Lg. Blk.
30	1003490000	PLUG, Button, 1 inch
31	6032008096	CIRCUIT CARD ASSEMBLY, Pre-Position 1A11
32	0500890048	SCREW, Machine PH 6-32 x 1/4 Lg.
33	0500040001	WASHER, Lock #6
34	0500200009	WASHER, Flat #6
35	0500260001	WASHER, Flat Fiber #6
36	6029080091	CIRCUIT CARD ASSEMBLY, Servo Amplifier 1A1, 1A8
37	0500890056	SCREW, Machine PH 6-32 x 5/16 Lg.
38	0500040001	WASHER, Lock #6
39	0500200009	WASHER, Flat #4 .250 OD
40	6032004091	CIRCUIT CARD ASSEMBLY, Tune Control 1A6

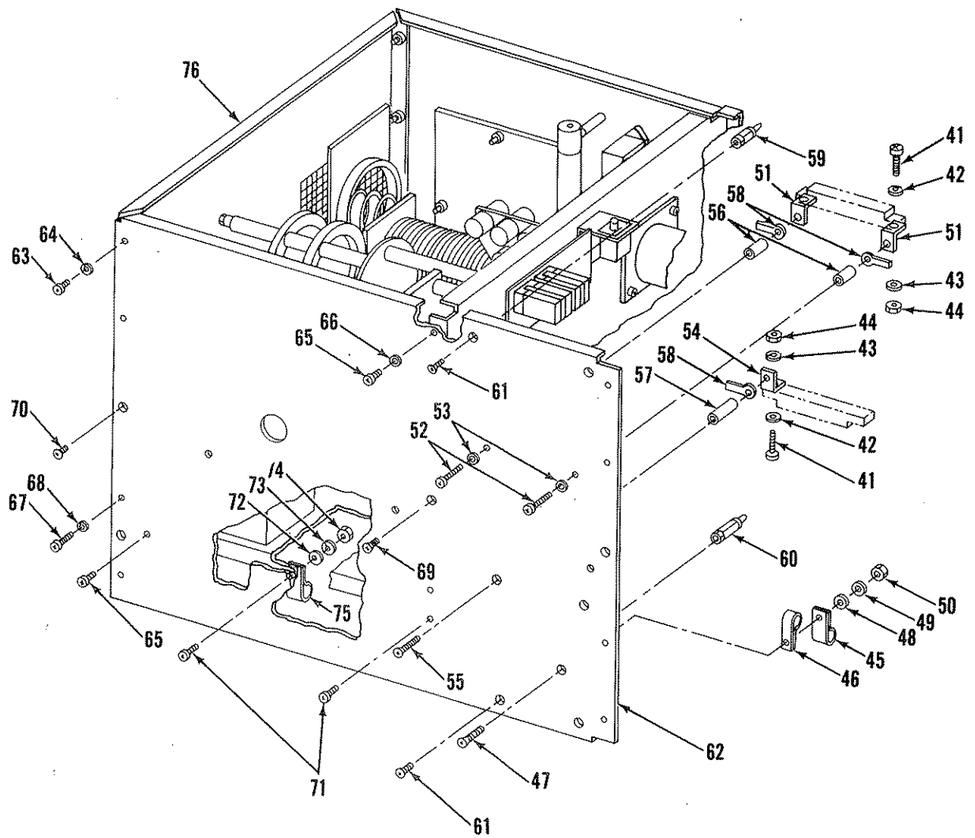

FIGURE 6-2 LPA-1900A POWER AMPLIFIER (SHEET 2 of 2)

FIGURE 6-2 LPA-1900A POWER AMPLIFIER SHEET 2

ITEM NO	SUNAIR PART NUMBER	DESCRIPTION
41	0500850071	SCREW, Machine PH 4-40 x 7/16 lg.
42	0500180008	WASHER, Flat, #4 .281 OD
43	0500020001	WASHER, Lock #4
44	0501870008	NUT, Hex 4-40 x 1/4 AF
45	0502250003	CLAMP, Loop 1/2 ID, 3/8 W
46	0502010002	CLAMP, Cable 3/8 ID, 3/8 W
47	0500711224	SCREW, Machine FH 6/32 x 3/4 Lg. Blk.
48	0500200009	WASHER, Flat #6
49	0500040001	WASHER, Lock #6
50	0501900004	NUT, Hex 6-32 x 5/16 AF
51	0508920001	BRACKET, Angle, 6-32 Tap Hole
52	0500891427	SCREW, Machine PH 6-32 x 3/8 Lg. Blk.
53	0500040028	WASHER, Lock #6 Blk.
54	0508920001	BRACKET, Angle, 6-32 Tap Hole
55	0500711828	SCREW, Machine FH 6-32 x 1 1/8 Lg. Blk.
56	0502270608	SPACER, Sleeve .140 ID, .250 OD, .500 LG.
57	0502270705	SPACER, Sleeve .140 ID, .250 OD, .875 LG.
58	0502050004	TERMINAL, Lug IT #6
59	0508990009	POST, Support 3/4 High Nylon
60	1004850018	POST, Support 1 1/8 High Nylon
61	0500710520	SCREW, Machine FH 6-32 x 5/16 Blk. Lg.
62	60321010XX	PANEL, RF, Left
63	0500910626	SCREW, Machine PH 8-32 x 3/8 Lg. Blk.
64	0500060029	WASHER, Lock #8
65	0500890625	SCREW, Machine PH 6-32 x 3/8 Lg. Blk.
66	0500040028	WASHER, Lock #6
67	0500911029	SCREW, Machine PH 8-32 x 5/8 Lg. Blk.
68	0500060029	WASHER, Lock #8 Blk.
69	0500710627	SCREW, Machine FH 6-32, 3/8 Lg. Blk.
70	0500730628	SCREW, Machine FH 8-32, 3/8 Lg. Blk.
71	0500890820	SCREW, Machine PH 6-32 x 1/2 Lg. Blk.
72	0500200009	WASHER, Flat #6
73	0500040001	WASHER, Lock #6
74	0501900004	NUT, Hex 6-32 x 5/16 AF
75	0502250003	CLAMP, Loop 1/2 ID, 3/8 W
76	60321000XX	CHASSIS ASSEMBLY, RF

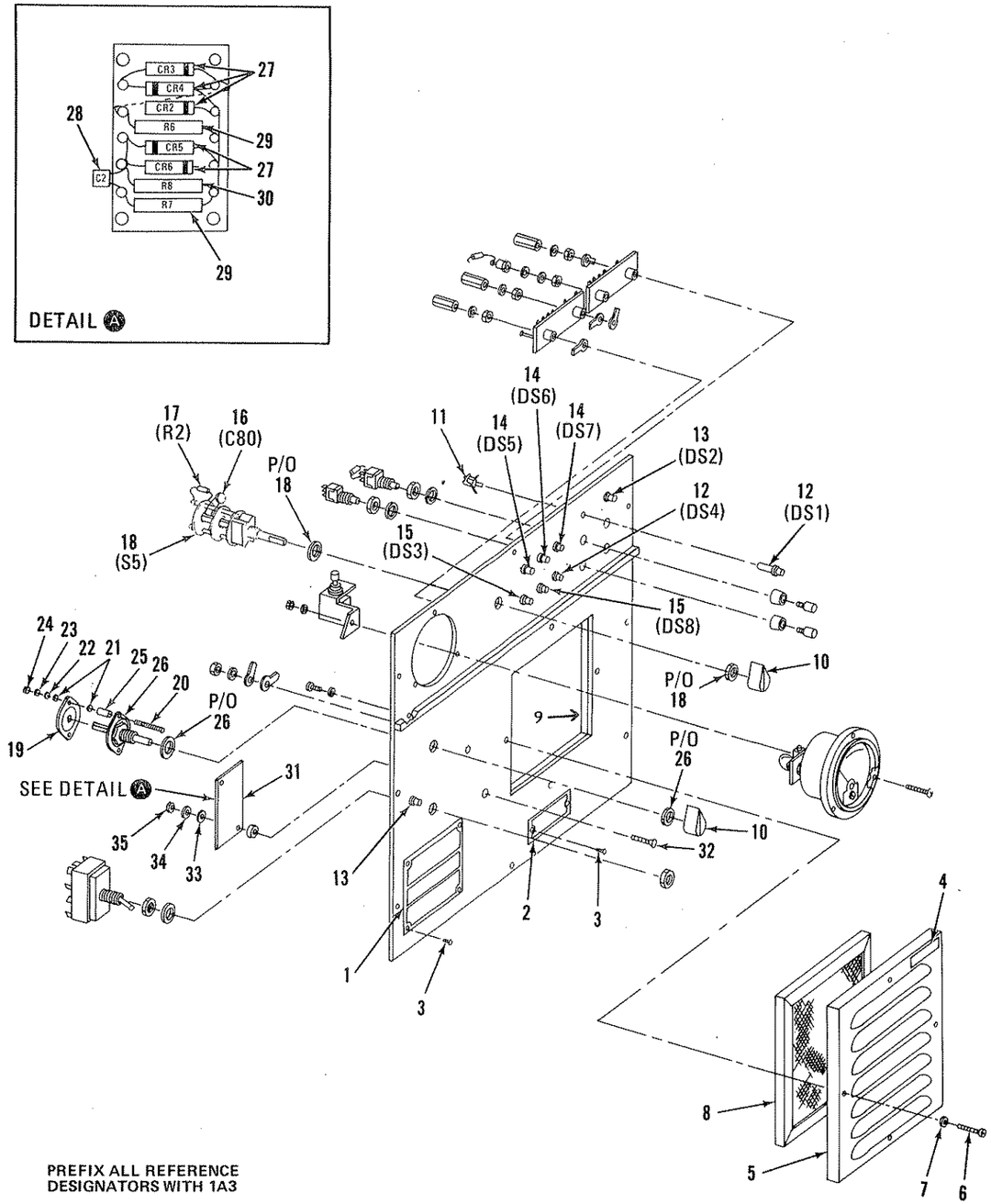

PREFIX ALL REFERENCE DESIGNATORS WITH 1A3

FIGURE 6-3 FRONT PANEL ASSEMBLY (SHEET 1 of 2)

FIGURE 6-3 FRONT PANEL ASSEMBLY SHEET 1

ITEM NO	SUNAIR PART NUMBER	DESCRIPTION
	60320110XX	FRONT PANEL ASSEMBLY
1	6032050301	PLATE, Identification
2	6032050203	PLATE, Identification
3	0533180007	PIN , Drive No. 0 x 1/8 Lg.
4	1003030017	LABEL, Air filter
5	60321041XX	HOLDER, Air filter
6	0500891222	SCREW, Machine PH 6-32 x 3/4 Lg. Blk.
7	0500040028	WASHER, Lock #6 Blk.
8	6032106900	FILTER, Air
9	0840960000	GASKET, Foam Tape
10	0321060008	KNOB, .70 D Blk, PTR. BR.
11	0841510008	CLIP, Lamp assembly mounting
12	6032072100	LAMP ASSEMBLY, Green
13	6032072304	LAMP ASSEMBLY, Red
14	6032072207	LAMP ASSEMBLY, Amber
15	6032072401	LAMP ASSEMBLY, White
16	0243550006	CAPACITOR, Fixed .01µf, 1000V, Z5U, 20%
17	0167240005	RESISTOR, Fixed 10K, 10%, 1/2 W
18	6032107302	SWITCH, Rotary 3 Pole, 2-11 Pos.
19	5026031404	SWITCH WAFER, 30 DEG
20	0501020144	SCREW, Machine RH 5-40 x 7/8 Lg.
21	0500260001	WASHER, Flat #6
22	0500190003	WASHER, Flat #5
23	0500030006	WASHER, Lock #5
24	0501920005	NUT, Hex 5-40 x 1/4 AF
25	0502270608	SPACER, Sleeve .140 ID, .250 OD, .500 Lg.
26	5025150507	SWITCH, DETENT, 12 Pos.
27	0403970008	SEMICONDUCTOR DEVICE, Diode 50V, 3A
28	0283370009	CAPACITOR, Fixed 47µf, 50 V, 20%
29	0197240003	RESISTOR, Fixed 1.0, 1%, 3 W
30	0197450008	RESISTOR, Fixed 10, 1%, 3 W
31	6032201791	TERMINAL BOARD
32	0500661022	SCREW, Machine FH 4-40 x 5/8 Lg. Blk.
33	0500180008	WASHER, Flat #4
34	0500040028	WASHER, Lock #6 Blk.
35	0501870008	NUT, Hex 4-40 x 1/4 AF

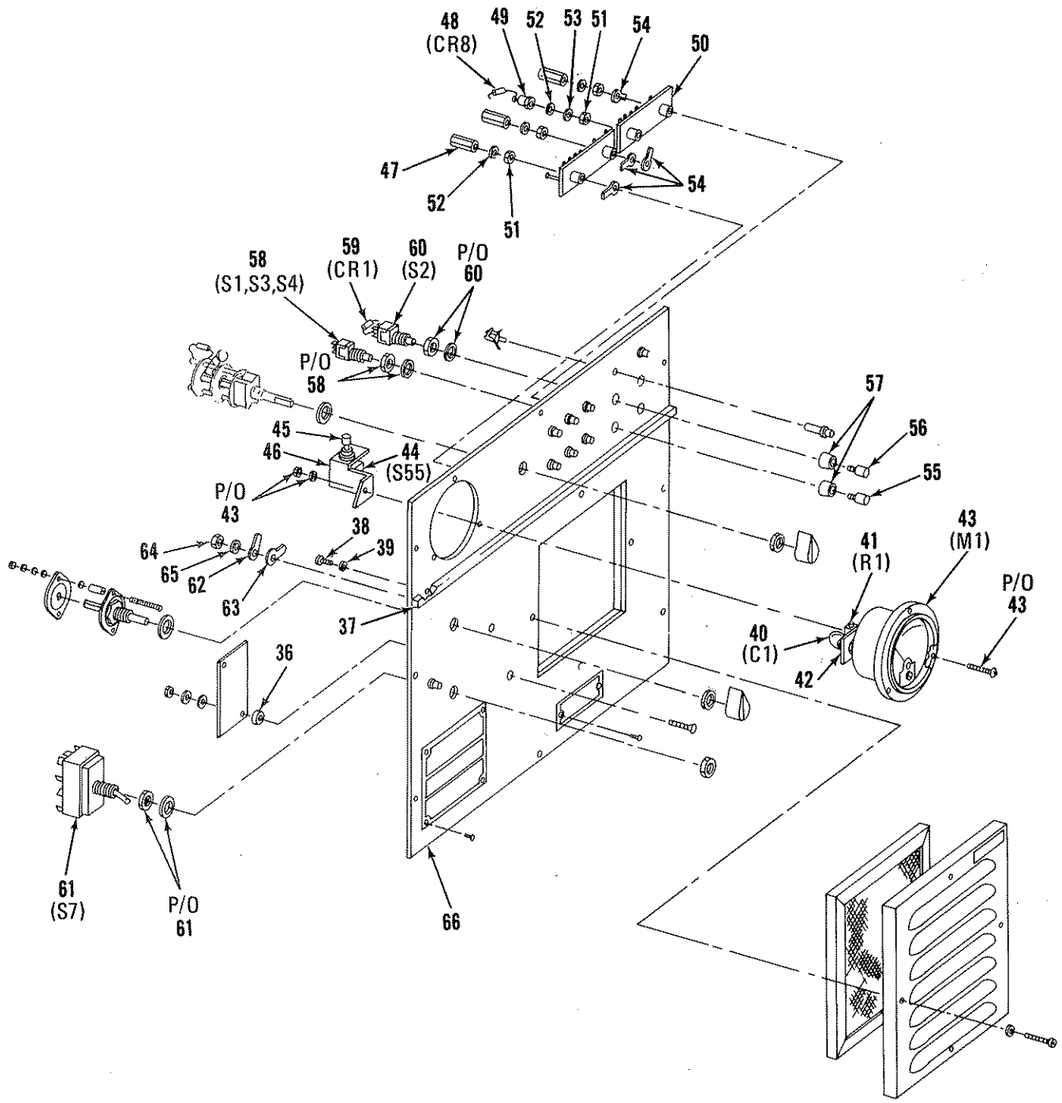

PREFIX ALL REFERENCE
DESIGNATORS WITH 1A3

FIGURE 6-3 FRONT PANEL ASSEMBLY (SHEET 2 of 2)

FIGURE 6-3 FRONT PANEL ASSEMBLY SHEET 2

ITEM NO	SUNAIR PART NUMBER	DESCRIPTION
36	0502270322	SPACER, Sleeve .146 ID, .218 OD, .128 Lg.
37	6032102807	BAR, Decorative
38	0500850054	SCREW, Machine PH 4-40 x 5/16 Lg.
39	0500020001	WASHER, Lock #4
42	6032103293	BOARD ASSEMBLY, Meter
40	0243550006	CAPACITOR, Fixed, .01µf, 1000V, Z5U, 20%
41	0338490043	RESISTOR, Variable, Pot. 10K, 10%, 3/4 W, 15 Turns
42	6032103234	PRINTED WIRING BOARD
43	6032103200	METER
44	1004780001	SWITCH, Pushbutton, 4PDT
45	1000880010	CAP, Push switch, Black
46	6032108007	BRACKET, Switch mounting
47	0514490004	SPACER, Sleeve, F-F 4-40 .625 Lg.
48	0405180004	SEMICONDUCTOR DEVICE, Diode 1N4004, 400V, 1A
49	0506390004	TERMINAL, Stud, 4-40 Female
50	0847210006	TERMINAL BOARD, 6 Pos.
51	0501870008	NUT, Hex 4-40 x 1/4 AF
52	0500020001	WASHER, Lock #4
53	0500180008	WASHER, Flat #4
54	0502030003	TERMINAL, Lug, IT NO. 4, 3/4 Lg.
55	1000880036	CAP, Push switch, Black
56	1000880028	CAP, Push switch, Red
57	0841720002	BEZEL, Switch
58	1000870014	SWITCH, Pushbutton, SPDT
59	0405180004	SEMICONDUCTOR DEVICE, Diode 1N4004, 400V, 1A
60	1000870006	SWITCH, Pushbutton, DPDT
61	1004860021	SWITCH, Toggle, 4 PDT
62	0502450002	TERMINAL, Lug, Plain NO. 8
63	0502060000	TERMINAL, Lug, IT No. 8
64	0501930001	NUT, Hex 8-32 x 11/32 AF
65	0500060002	WASHER, Lock #8
66	60321018XX	PANEL, Front

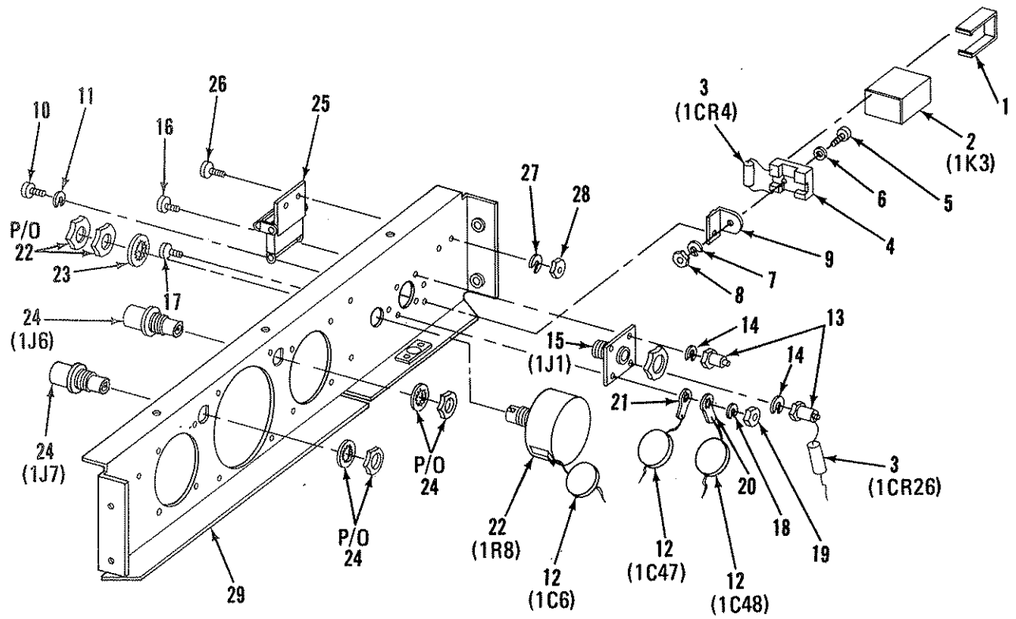

FIGURE 6-4 REAR PANEL ASSEMBLY

FIGURE 6-4 REAR PANEL ASSEMBLY

ITEM NO	SUNAIR PART NUMBER	DESCRIPTION
	60320160XX	PANEL ASSEMBLY, Rear
1	0668080001	RETAINER, Electrical, relay
2	0666400008	RELAY, DPDT 12V, Plug-In, 3A
3	0405180004	DIODE, Rectifier, IN4004, 400v, 1A
4	0668220007	SOCKET, Plug-In, electrical DPDT Contacts
5	0500850054	SCREW, Machine PH 4-40 x 5/16 Lg.
6	0502560002	WASHER, Flat #4
7	0500020001	WASHER, Lock #4
8	0501870008	NUT, Hex 4-40 x 1/4 AF
9	6032105806	BRACKET, Relay socket
10	0500890048	SCREW, Machine PH 6-32 x 1/4 Lg.
11	0500040001	WASHER, Lock #6
12	0243550006	CAPACITOR, Fixed .01 µf, 1000V, Z5U, 20%
13	0506390004	TERMINAL, Stud 4-40 Female
14	0500020001	WASHER, Lock #6
15	0741920000	CONNECTOR, RF, UHF, SO-239, UG-296U
16	0500850054	SCREW, Machine PH 4-40 x 5/16 Lg.
17	0500850062	SCREW, Machine PH 4-40 x 3/8 Lg.
18	0500020001	WASHER, Lock #4
19	0501870008	NUT, Hex 4-40 x 1/4 AF
20	0502420006	TERMINAL, Lug Plain #4
21	0502030003	TERMINAL, Lug IT No. 4
22	0346490006	RESISTOR, Variable, 10K, 10%, 4W, 1/4 Shaft
23	0500450005	WASHER, Lock IT .375 OD
24	1000170004	CONNECTOR, RF, BNC, UG-492 A/U
25	0526370017	CATCH, Hold down Black
26	0500890056	SCREW, Machine PH 6-32 x 5/16 Lg.
27	0500040001	WASHER, Lock #6
28	0501910000	NUT, Hex 6-32 x 1/4 AF
29	6032101207	PANEL, Rear

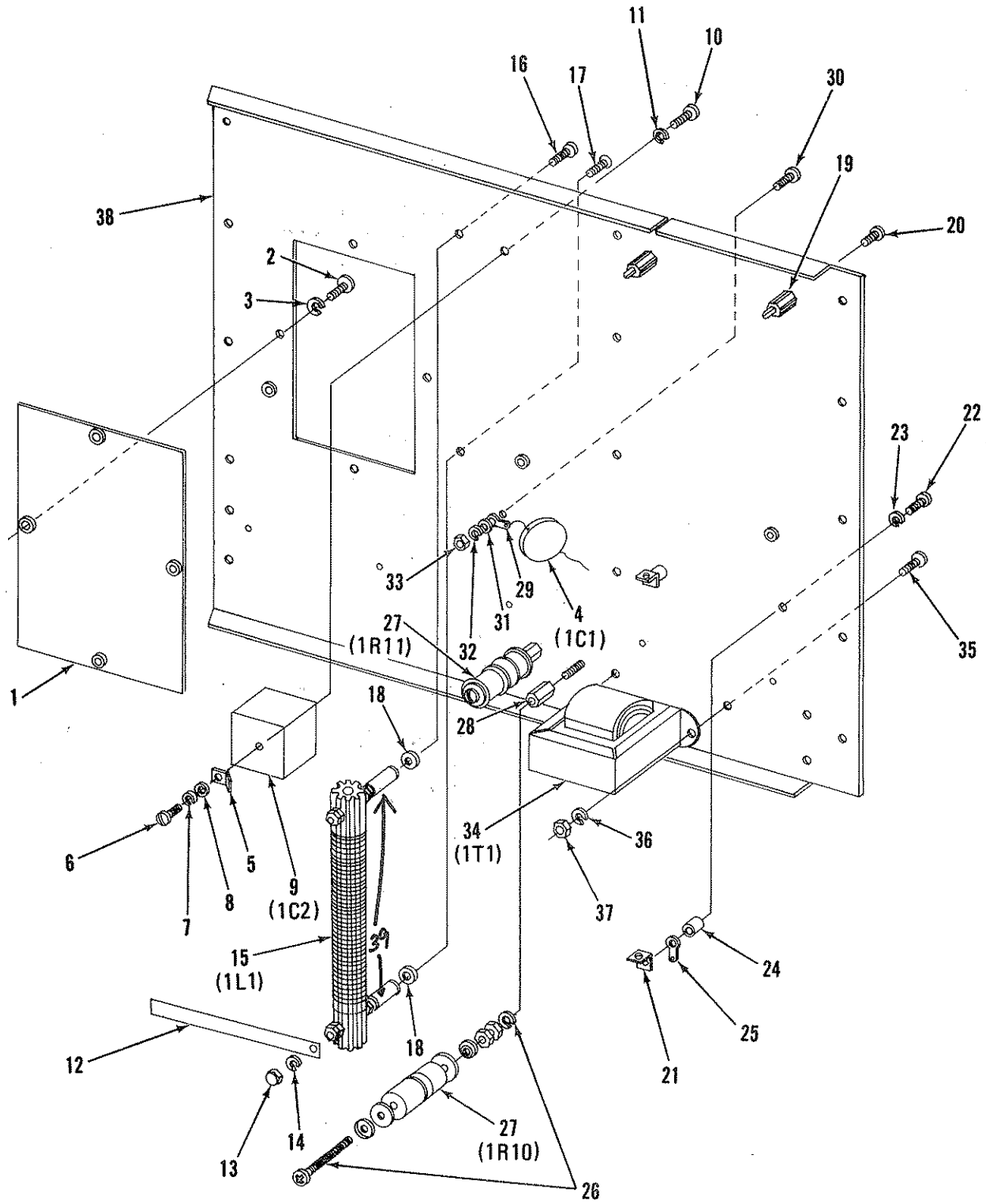

FIGURE 6-5 RIGHT PANEL ASSEMBLY

FIGURE 6-5 RIGHT PANEL ASSEMBLY

ITEM NO	SUNAIR PART NUMBER	DESCRIPTION
	60320140XX	PANEL ASSEMBLY, Right
1	60321025XX	PLATE, Cover
2	0500890625	SCREW, Machine PH 6-32 x 3/8 Lg. Blk.
3	0500040028	WASHER, Lock #6 Blk.
4	0289110009	CAPACITOR, Fixed .002µf, 6KV, Z5U 20%
5	0502070005	TERMINAL, Lug IT No.10
6	0500940045	SCREW, Machine PH 10-32 x 1/4 Lg.
7	0500070008	WASHER, Lock #10
8	0500220000	WASHER, Flat #10
9	1006710027	CAPACITOR, Fixed 2000pf, 5KV, Type 272
10	0500940428	SCREW, Machine PH 10-32 x 1/4 Lg. Blk.
11	0500070024	WASHER, Lock #10 Blk.
12	6032109003	LEAD, HV, Plate Inductor
13	0501730001	NUT, Cap 6-32 x 5/16 AF
14	0500040028	WASHER, Lock #6 Blk.
15	6032074196	PLATE CHOKE ASSEMBLY
16	0500890625	SCREW, Machine PH 6-32 x 3/8 Lg. Blk.
17	0500710627	SCREW, Machine FH 6-32 x 3/8 Lg. Blk.
18	0539300004	WASHER, Flat #6
19	0508990009	SUPPORT, PC Board 3/4" High
20	0500710520	SCREW, Machine FH 6-32 x 5/16 Lg. Blk.
21	0508920001	BRACKET, Angel 6-32 Tap Hole
22	0500891427	SCREW, Machine PH 6-32 x 3/8 Lg. Blk.
23	0500040028	WASHER, Lock #6 Blk.
24	0502270608	SPACER, Sleeve .140 ID, .250 OD, .500 Lg.
25	0502050004	TERMINAL, Lug IT No. 6
26	6032073106	MOUNTING ASSEMBLY, Resistor 25W
27	0197370004	RESISTOR, Adjustable 50 ohm, 10%, 25 W
28	0508900000	STANDOFF, F-F, 10-32
29	0502050004	TERMINAL, Lug IT No.6
30	0500710520	SCREW, Machine FH 6-32 x 5/16 Lg. Blk.
31	0500200009	WASHER, Flat #6
32	0500040001	WASHER, Lock #6
33	0501910000	NUT, Hex 6-32 x 1/4 AF
34	6032071707	TRANSFORMER, 24V, 1A
35	0500910626	SCREW, Machine PH 8-32 x 3/8 Lg. Blk.
36	0500060002	WASHER, Lock #8
37	0501930001	NUT, Hex 8-32 x 11/32 AF
38	60321011XX	PANEL, Right
39	0840990006	Stand off, F-F, 6-32, 1.000L (2ea)

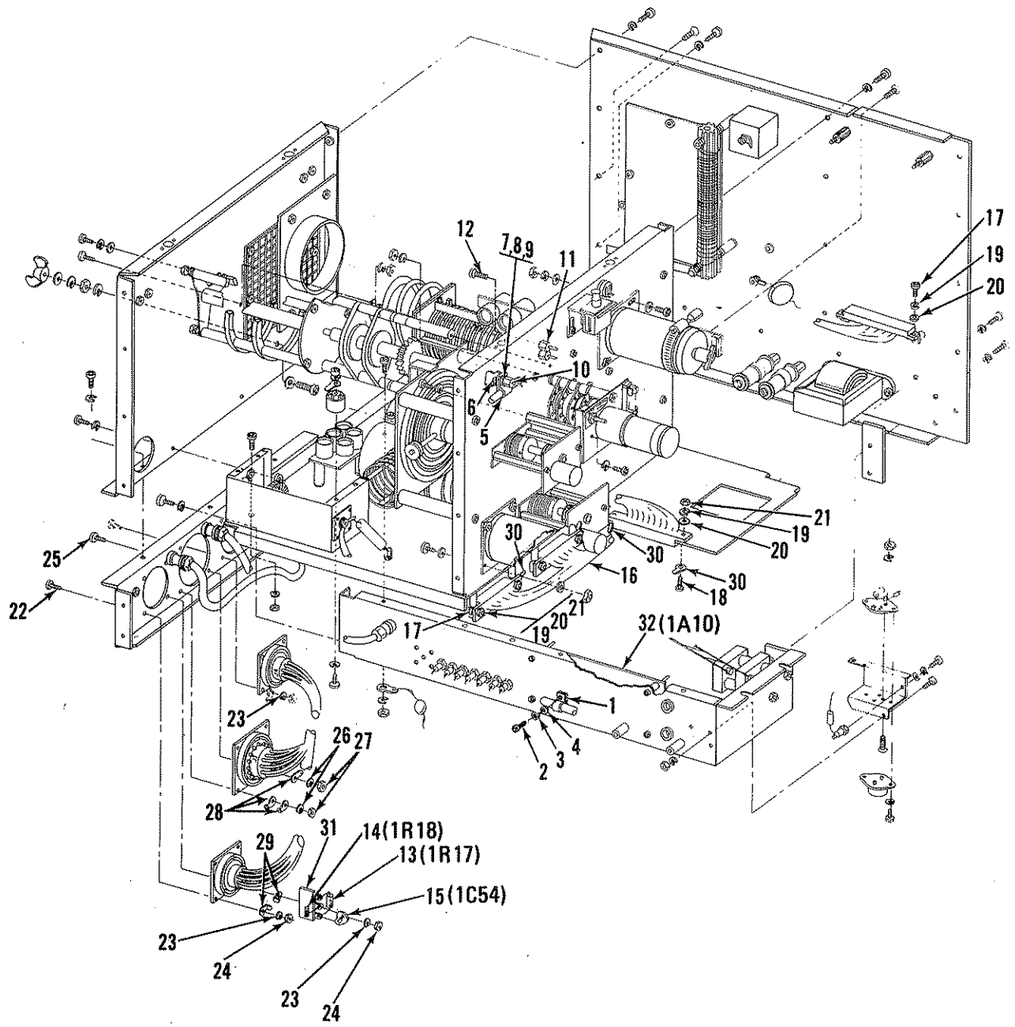

FIGURE 6-6 RF CHASSIS ASSEMBLY (SHEET 1 of 10)

FIGURE 6-6 RF CHASSIS ASSEMBLY SHEET 1

ITEM NO	SUNAIR PART NUMBER	DESCRIPTION
	60321000XX	CHASSIS ASSEMBLY, RF
1	0502130008	CLAMP, Loop 7/16 ID, 3/8W
2	0500890064	SCREW, Machine PH 6-32 x 3/8 Lg.
3	0500040001	WASHER, Lock #6
4	0500200009	WASHER, Flat #6
5	0502010002	CLAMP, Loop 3/8 ID, 3/8W
6	0500890081	SCREW, Machine PH 6-32 x 1/2 Lg.
7	0500200009	WASHER, Flat #6
8	0500040001	WASHER, Lock #6
9	0508660009	NUT, Hex 6-32, 1/4 AF Class 2
10	0508980003	POST, Electrical - Mechanical 5/8 High
11	0508990009	POST, Electrical - Mechanical 3/4 High
12	0500890056	SCREW, Machine PH 6-32 x 5/16 Lg.
13	0171180003	RESISTOR, Fixed 100, 5% 1/4 W
14	0178070009	RESISTOR, Fixed 2.2K, 5%, 1/4 W
15	0296540005	CAPACITOR, Fixed 68µf, 15V, T368
16	6032015092	HARNESS, Main
17	0500850089	SCREW, Machine PH 4-40 x 1/2 Lg.
18	0500850097	SCREW, Machine, PH 4-40 x 9/16 Lg.
19	0500020001	WASHER, Lock #4
20	0500180008	WASHER, Flat #4
21	0501880003	NUT, Hex 4-40 x 3/16 AF
22	0500890072	SCREW, Machine PH 6-32 x 7/16 Lg.
23	0500040001	WASHER, Lock #6 (See Figure 6.8 for detail)
24	0501900004	NUT, Hex 6-32 x 5/16 AF
25	0500910081	SCREW, Machine PH 8-32 x 1/2 Lg.
26	0500060002	WASHER, Lock #8
27	0501930001	NUT, Hex 8-32 x 11/32 AF
28	0502060000	TERMINAL, Lug, IT NO. 8
29	0502050004	TERMINAL, Lug IT No. 6
30	0502440007	TERMINAL, Lug No. 6 Plain
31	0996700056	TERMINAL, Board
32	6032009092	CIRCUIT CARD ASSEMBLY, LV Rectifier 1A10

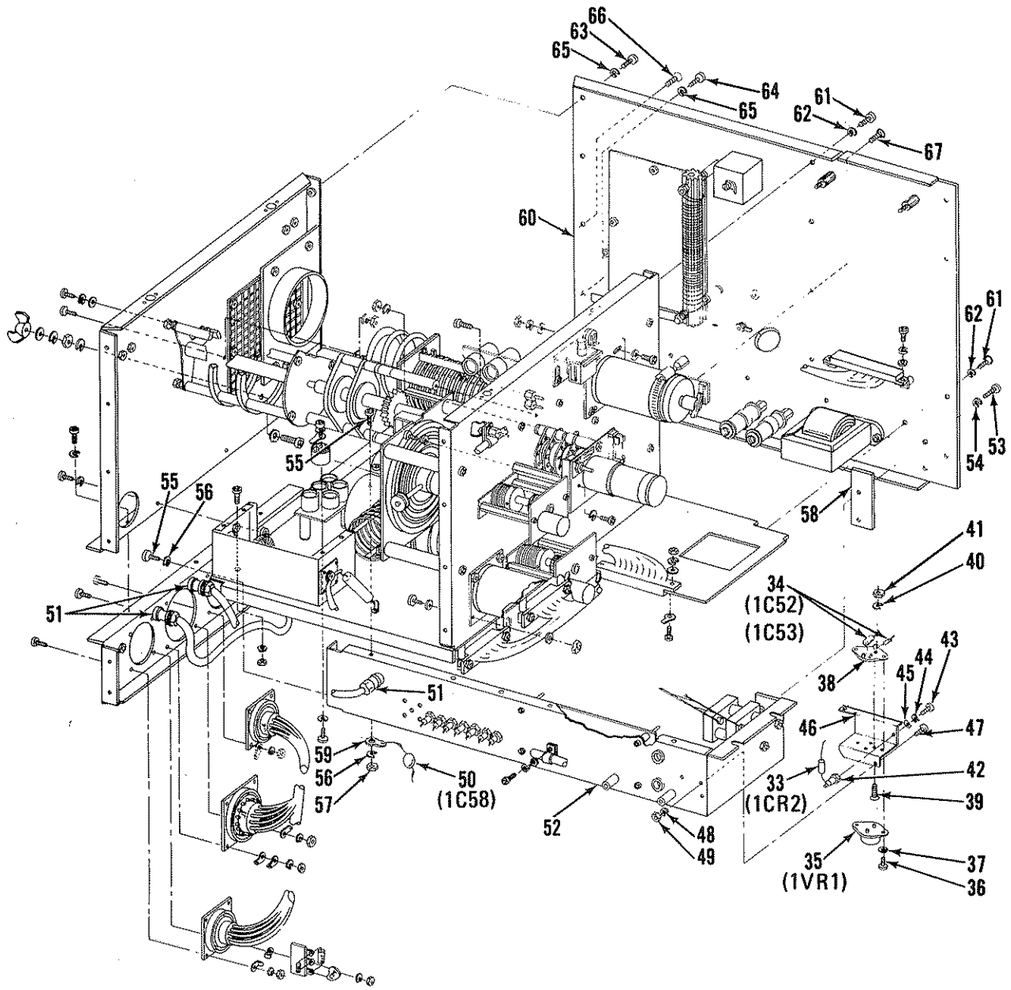

FIGURE 6-6 RF CHASSIS ASSEMBLY (SHEET 2 of 10)

FIGURE 6-6 RF CHASSIS ASSEMBLY SHEET 2

ITEM NO	SUNAIR PART NUMBER	DESCRIPTION
33	0403970008	SEMICONDUCTOR DEVICE, Diode 1N5400, 50V, 3A
34	0283370009	CAPACITOR, Fixed .47µf, 50V, x5V, 20%
35	1004960026	MICROCIRCUIT, Volt Reg. MC 7824CK, 24V
36	0500890081	SCREW, Machine PH 6-32 x 1/2 Lg.
37	0500040001	WASHER, Lock #6
38	0841550000	SOCKET, Plug-In, Transistor TO-3
39	0500620083	SCREW, Machine FH 4-40 x 1/2 Lg.
40	0500020001	WASHER, Lock #4
41	0501880003	NUT, Hex 4-40 x 3/16 AF
42	0506390004	TERMINAL, Insul 4-40 Female
43	0500850046	SCREW, Machine, PH 4-40 x 1/4 Lg.
44	0500020001	WASHER, Lock #4
45	0500180008	WASHER, Flat, #4
46	6032100901	BRACKET, Regulator
47	0500850062	SCREW, Machine, PH 4-40 x 3/8 Lg.
48	0500020001	WASHER, Lock #4
49	0501880003	NUT, Hex 4-40 x 3/16 AF
50	0260780006	CAPACITOR, Fixed 33pf, 500V, DM10, 5%
	8043051291	CABLE ASSY, RG58A/U, BNC/BNC 1 Ft.
51	0744030005	CONNECTOR, RF, BNC, UG-88/U Male
52	6032012093	PLENUM ASSEMBLY
53	0500890820	SCREW, Machine PH 6-32 x 1/2 Lg. Blk.
54	0500040028	WASHER, Lock #6
55	0500890064	SCREW, Machine 6-32 x 3/8 Lg.
56	0500040001	WASHER, Lock #6
57	0501900004	NUT, Hex 6-32 x 5/16 AF
58	6032110401	SPACER, Plenum
59	0502450002	TERMINAL, Lug, Plain No. 8
60	60320140XX	PANEL ASSEMBLY, Right
61	0500890625	SCREW, Machine PH 6-32 x 3/8 Lg. Blk.
62	0500040028	WASHER, Lock #6
63	0500910626	SCREW, Machine PH 8-32 x 3/8 Lg. Blk.
64	0500911029	SCREW, Machine PH 8-32 x 5/8 Lg. Blk.
65	0500060029	WASHER, Lock #8 Blk.
66	0500730628	SCREW, Machine FH 8-32, 3/8 Lg. Blk.
67	0500710627	SCREW, Machine FH 6-32, 3/8 Lg. Blk.

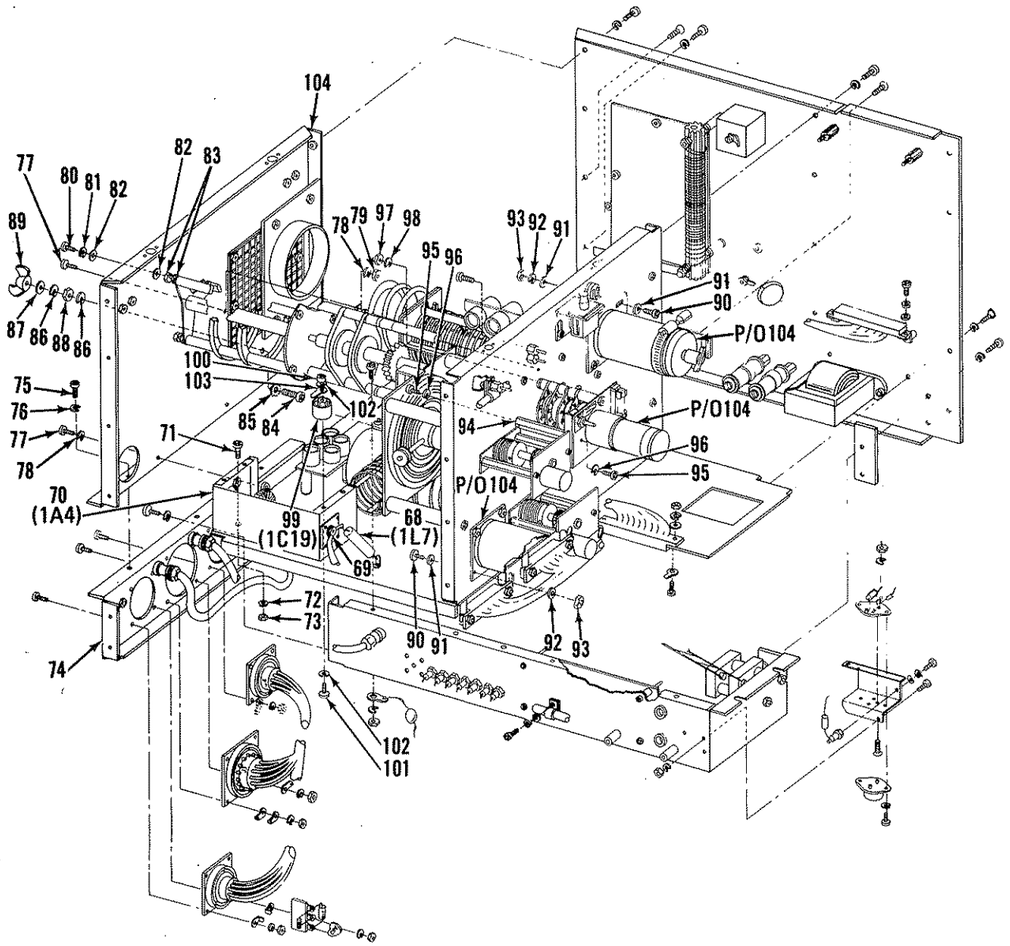

FIGURE 6-6 RF CHASSIS ASSEMBLY (SHEET 3 of 10)

FIGURE 6-6 RF CHASSIS ASSEMBLY SHEET 3

ITEM NO	SUNAIR PART NUMBER	DESCRIPTION
68	0559400004	INDUCTOR CHOKE, 44.0µh
69	0502450002	TERMINAL, Lug, Plain No. 8
70	6032020096	RF WATTMETER ASSEMBLY, 1A4
71	0500890056	SCREW, Machine PH 6-32 x 5/16 Lg.
72	0500040001	WASHER, Lock #6
73	0501900004	NUT, Hex 6-32 x 5/16 AF
74	60320160XX	PANEL ASSY, Rear lower
75	0500910057	SCREW, Machine PH 8-32 x 5/16 Lg.
76	0500060002	WASHER, Lock #8
77	0500890064	SCREW, Machine PH 6-32 x 3/8 Lg.
78	0500040001	WASHER, Lock #6
79	0501900004	NUT, Hex 6-32 x 5/16 AF
80	0500910189	SCREW, Machine PH 8-32 x 1 1/8 Lg.
81	0500040001	WASHER, Lock #6
82	0500060002	WASHER, Flat #8
83	0501930001	NUT, Hex 8-32 x 11/32 AF
84	0537340165	SCREW, Machine RH 1/4-20 x 1 Lg.
85	0525080007	WASHER, Lock ET 1/4 .500 OD
86	0538370009	WASHER, Lock 1/4
87	0502600004	WASHER, Flat 1/4 Lg. .687 OD
88	0502540001	NUT, Hex 1/4- 20 x 7/16 AF
89	0507730003	NUT, Wing, 1/4-20
90	0500910081	SCREW, Machine PH 8-32 x 1/2 Lg.
91	0500210004	WASHER, Flat #8
92	0500060002	WASHER, Lock #8
93	0501930001	NUT, Hex 8-32 x 11/32 AF
94	0508940001	POST, Electrical - Mechanical F-F, 8-32 2.750 Lg.
95	0500910081	SCREW, Machine PH 8-32 x 1/2 Lg.
96	0500060002	WASHER, Lock #8
97	0501890009	NUT, Hex 5-40 x 5/16 AF
98	0500030006	WASHER, Lock #5
99	0290200008	CAPACITOR, Fixed 50pf, 7.5 KV, NPO
100	0500890048	SCREW, Machine PH 6-32 x 1/4 Lg.
101	0500890056	SCREW, Machine PH 6-32 x 5/16 Lg.
102	0500040001	WASHER, Lock #6
103	0502050004	TERMINAL, Lug IT. No. 6
104	60321200XX	CHASSIS SUBASSEMBLY (See Figure 6.7)

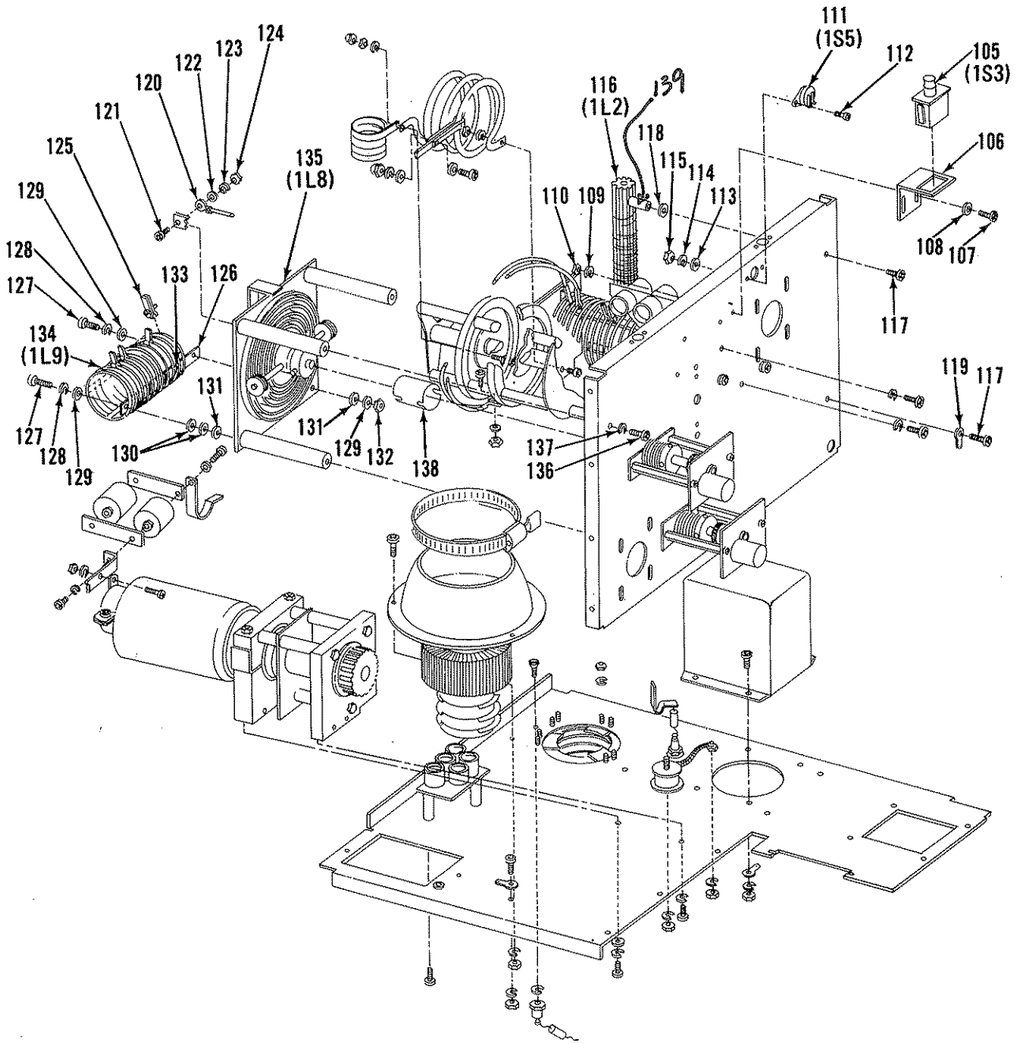

FIGURE 6-6 RF CHASSIS ASSEMBLY (SHEET 4 of 10)

FIGURE 6-6 RF CHASSIS ASSEMBLY SHEET 4

ITEM NO	SUNAIR PART NUMBER	DESCRIPTION
105	0346280001	SWITCH, Push-Pull SPST
106	5025220301	BRACKET, Switch mounting
107	0500890064	SCREW, Machine PH 6-32 x 3/8 Lg.
108	0500200009	WASHER, Flat #6
109	0500040001	WASHER, Lock #6
110	0501900004	NUT, Hex 6-32 x 5/16 AF
111	6032074307	SWITCH, Thermal
112	0500850054	SCREW, Machine PH 4-40 x 5/16 Lg.
113	0500180008	WASHER, Flat #4
114	0500020001	WASHER, Lock #4
115	0501870008	NUT, Hex 4-40 x 1/4 AF
116	6032074293	CHOKE, RF Plate
117	0500890056	SCREW, Machine PH 6-32 x 5/16 Lg.
118	0539300004	WASHER, Flat #6
119	0502050004	TERMINAL, Lug IT No. 6
120	0502450002	TERMINAL, Lug Plain No.8
121	0537100059	SCREW, Machine RH 8-32 x 5/16 Lg.
122	0502580003	WASHER, Flat #8L .437 OD
123	0500060002	WASHER, Lock #8
124	0501930001	NUT, Hex 8-32 x 11/32 AF
125	0506650006	CLIP, Electrical, Air Dux
126	6032108104	BAR, Coil mounting
127	0500910146	SCREW, Machine PH 8-32 x 7/8 Lg.
128	0500060002	WASHER, Lock #8
129	0500210004	WASHER, Flat #8
130	0500740003	WASHER, Flat #8 .375 OD
131	0500300003	WASHER, Flat #8 .312 OD
132	0501930001	NUT, Hex 8-32 x 11/32 AF
133	0600240002	TIE, Cable 4 Lg. ¾ Dia.
134	0647970007	INDUCTOR, Air Dux, 6TPI
135	6032106209	INDUCTOR, Var, Pancake
136	0500910081	SCREW, Machine PH 8-32 x 1/2 Lg.
137	0500060002	WASHER, Lock #8
138	6032106004	SLEEVE, Insulator
139	0840998006	Standoff, F-F, 6-32 1.000L (2ea)

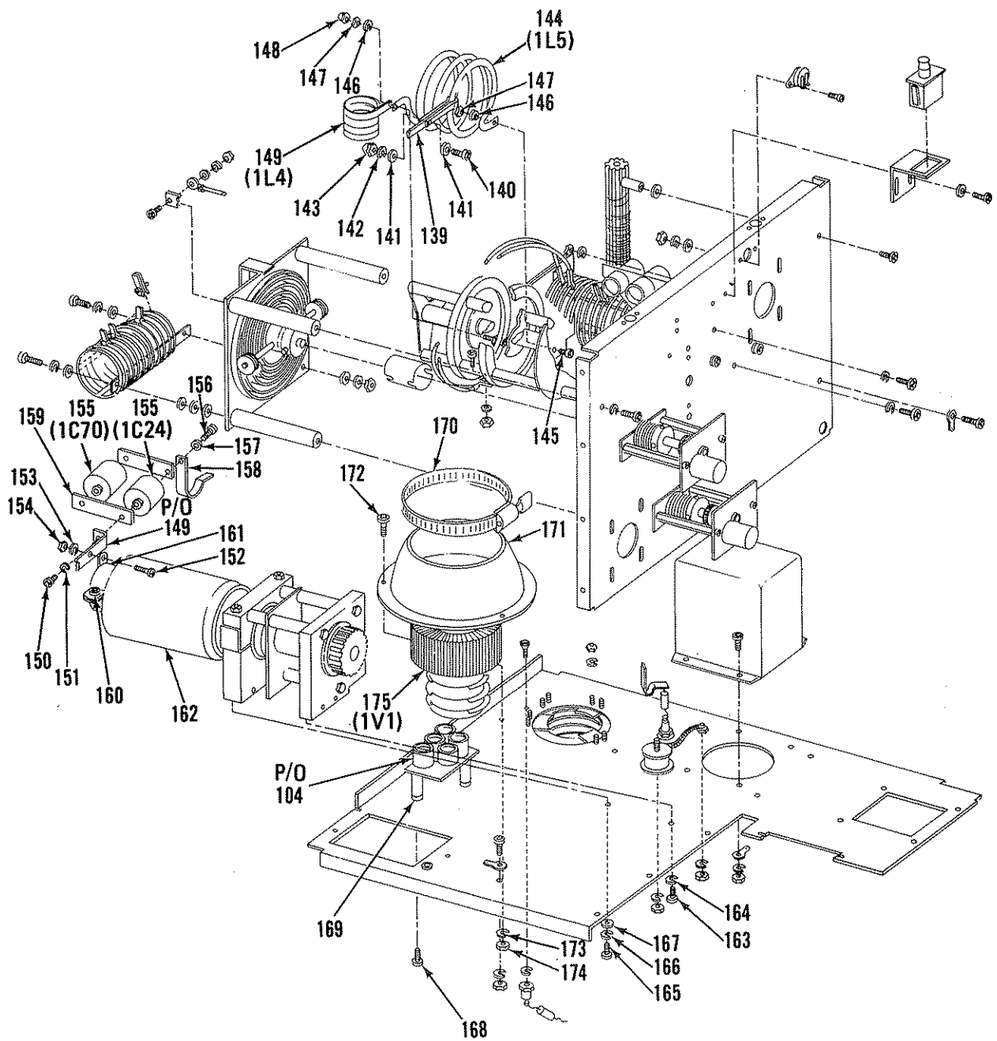

FIGURE 6-6 RF CHASSIS ASSEMBLY (SHEET 5 of 10)

FIGURE 6-6 RF CHASSIS ASSEMBLY SHEET 5

ITEM NO	SUNAIR PART NUMBER	DESCRIPTION
139	6032109101	STRAP, Band 8 Tap
140	0537080058	SCREW, Machine RH 6-32 x 5/16 Lg.
141	0502570008	WASHER, Flat #6L .375 OD
142	050004001	WASHER, Lock #6
143	0501730001	NUT, Cap 6-32 x 5/16 AF
144	6032104206	INDUCTOR, Air Wound, Tubing
145	0537080040	SCREW, Machine RH 6-32 x 1/4 Lg.
146	0500040001	WASHER, Lock #6
147	0502500000	NUT, Hex 6-32 x 5/16 AF
148	0501730001	NUT, Cap 6-32 x 5/16 AF
149	6032104303	INDUCTOR, Air Wound, Ribbon
150	0537080058	SCREW, Machine RH 6-32 x 5/16 Lg.
151	0500040001	WASHER, Lock #6
152	0537100059	SCREW, Machine RH 8-32 x 5/16 Lg.
153	0500060002	WASHER, Lock #8
154	0502520001	NUT, Hex 8-32 x 11/32 AF
155	0282060006	CAPACITOR, Fixed 1000pf, 5KV, H1-K
156	0537080031	SCREW, Machine RH 6-32 x 3/16 Lg.
157	0500040001	WASHER, Lock #6
158	6032109208	STRAP, Blocking Cap.
159	1004690011	PLATE, Electrical
160	0500890056	SCREW, Machine PH 6-32 x 5/16 Lg.
161	6032104702	CLAMP, Contact
162	6032071294	TUNING CAPACITOR ASSY, C25
163	0500910057	SCREW, Machine PH 8-32 x 5/16 Lg.
164	0500060002	WASHER, Lock #8
165	0500940100	SCREW, Machine PH 10-32 x 5/8 Lg.
166	0500070008	WASHER, Lock #10
167	0500220000	WASHER, Flat #10
168	0500890064	SCREW, Machine PH 6-32 x 3/8 Lg.
169	0539300004	WASHER, Flat #6 .375 OD
170	0521270006	CLAMP, Hose Size 28
171	6032072606	CHIMNEY
172	0500890072	SCREW, Machine PH 6-32 x 7/16 Lg.
173	0500040001	WASHER, Lock #6
174	0501910000	NUT, Hex 6-32 x 1/4 AF
175	6032071804	TUBE, Electron 4CX1500B

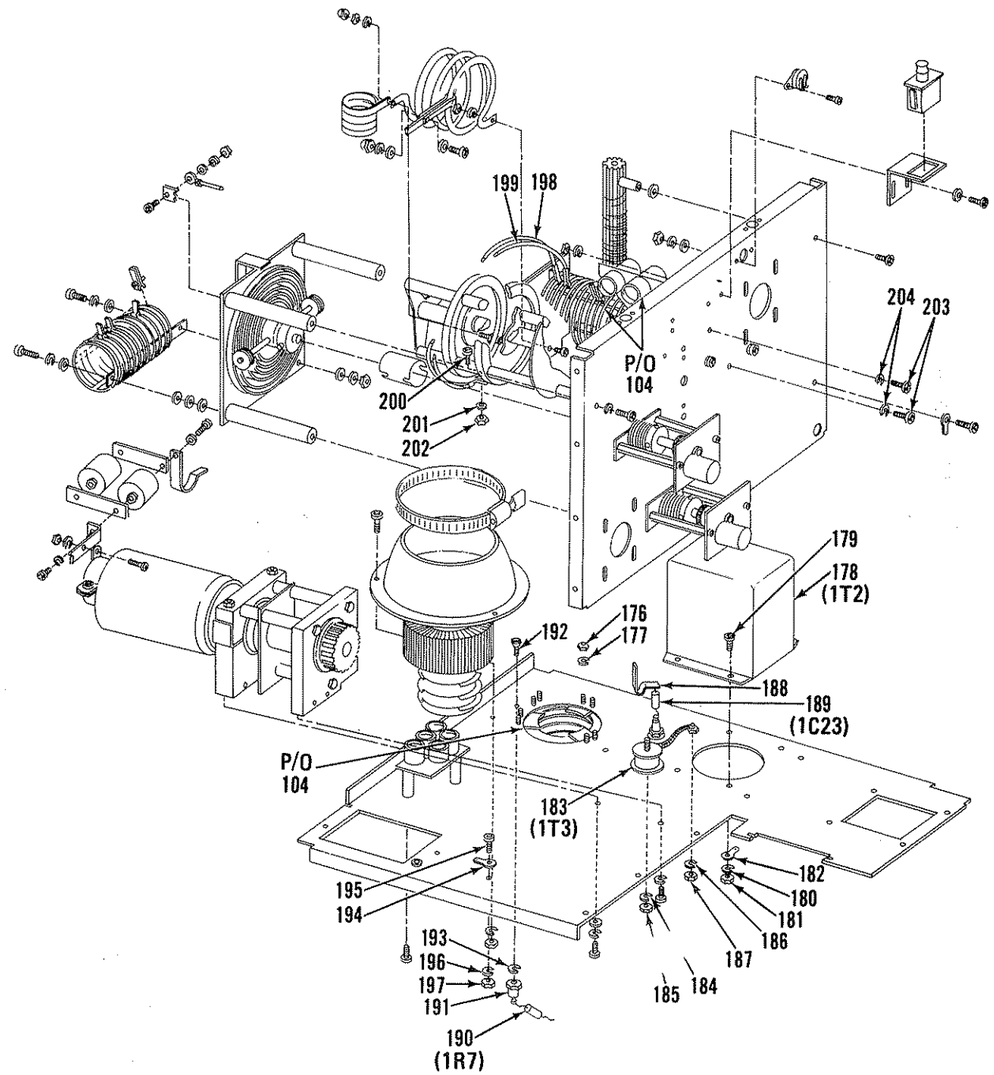

FIGURE 6-6 RF CHASSIS ASSEMBLY (SHEET 6 of 10)

FIGURE 6-6 RF CHASSIS ASSEMBLY SHEET 6

ITEM NO	SUNAIR PART NUMBER	DESCRIPTION
176	0501880003	NUT, Hex 4-40 x 3/16 AF
177	0500020001	WASHER, Lock #4
178	6032300307	TRANSFORMER, Filament
179	0500910065	SCREW, PH 8-32 x 3/8 Lg.
180	0500060002	WASHER, Lock #8
181	0501930001	NUT, Hex 8-32 x 11/32 AF
182	0502440007	TERMINAL, Lug Plain No.6
183	6032060098	PHASE DISCRIMINATOR
184	0500040001	WASHER, Lock #6
185	0501900004	NUT, Hex 6-32 x 5/16 AF
186	0500070008	WASHER, Lock #10
187	0501940006	NUT, Hex 10-32 x 3/8 AF
188	6032108805	STRAP CAP DIVIDER
189	0282920005	CAPACITOR, 3pf, 5KV, NPO
190	0188990003	RESISTOR, Fixed 1K, 10%, 2W
191	0506390004	TERMINAL, Stud 4-40 Female
192	0500660042	SCREW, Machine FH 4-40 x 1/4 Lg.
193	0500020001	WASHER, Lock #4
194	0502050004	TERMINAL, Lug IT No. 6
195	0500890056	SCREW, Machine PH 6-32 x 3/8 Lg.
196	0500040001	WASHER, Lock #6
197	0501910000	NUT, Hex 6-32 x 1/4 AF
198	1004250002	STRAP, Band 7
199	1004250011	STRAP, Band 6
200	0500850046	SCREW, Machine 4-40 x 1/4 Lg.
201	0500020001	WASHER, Lock #4
202	0501880003	NUT, Hex 4-40 x 3/16 AF
203	0500890056	SCREW, Machine PH 6-32 x 5/16 Lg.
204	0500040001	WASHER, Lock #6

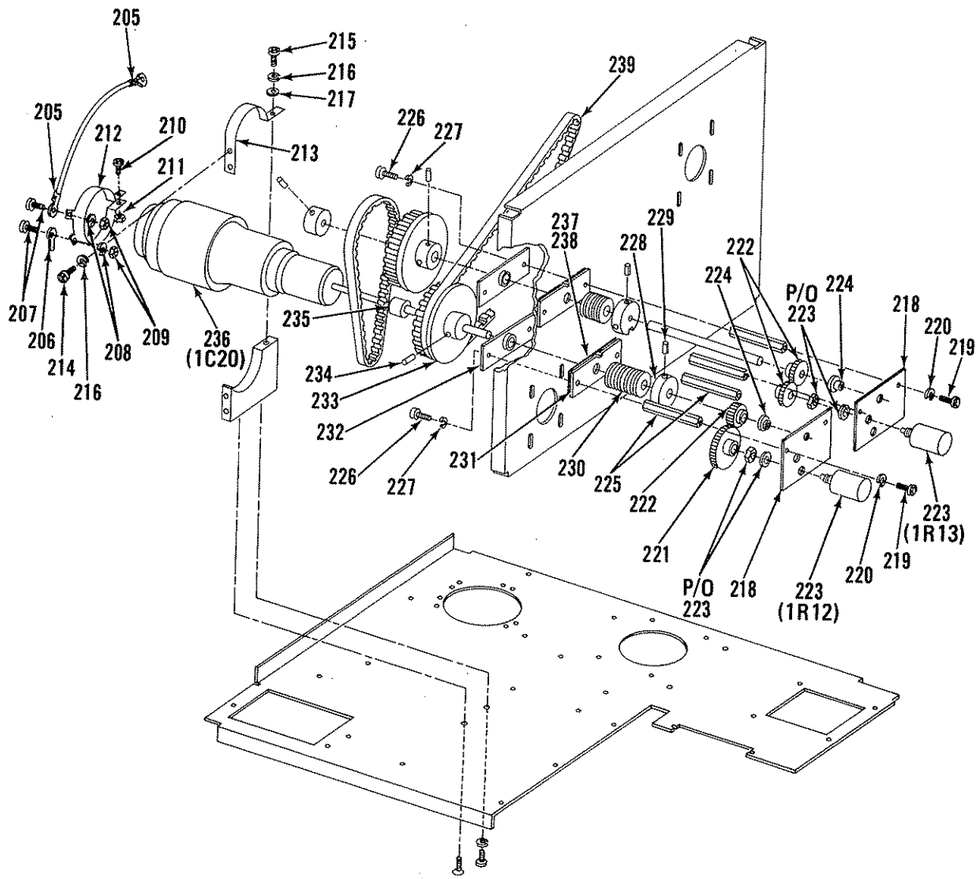

FIGURE 6-6 RF CHASSIS ASSEMBLY (SHEET 7 of 10)

FIGURE 6-6 RF CHASSIS ASSEMBLY SHEET 7

ITEM NO	SUNAIR PART NUMBER	DESCRIPTION
205	0502450002	TERMINAL, Lug, Plain No. 8
206	0502050004	TERMINAL, Lug IT No. 6
207	0500890056	SCREW, Machine PH 6-32 x 5/16 Lg.
208	0500040001	WASHER, Lock #6
209	0501900004	NUT, Hex 6-32 x 5/16 AF
210	0500890145	SCREW, Machine PH 6-32 x 7/8 Lg.
211	0501900004	NUT, Hex 6-32 x 5/16 AF
212	6035082009	CLAMP, Variable Capacitor
213	6032106705	CLAMP, Capacitor
214	0500890056	SCREW, Machine PH 6-32 x 5/16 Lg.
215	0500890102	SCREW, Machine PH 6-32 x 5/8 Lg.
216	0500040001	WASHER, Lock #6
217	0500200009	WASHER, Flat #6
218	6032108309	PLATE, Mounting, resistor
219	0500910081	SCREW, Machine PH 8-32 x 1/2 Lg.
220	0500060002	WASHER, Lock, #8
221	0841870004	GEAR, Spur
222	6032030504	GEAR, Spur 39 T x 1/4 Bore
223	0318650002	RESISTOR, Variable Pot .25K, 3W, 10 Turns
224	0501790004	BEARING, Sleeve
225	0508910005	STANDOFF, F-F, 8-32 x 2.375 Lg.
226	0534850081	SCREW, Hex HD 8-32 x 1/2 Lg.
227	0500060002	WASHER, Lock #8
	6032071391	LIMIT STOP ASSEMBLY, Tune drive
228	5026050301	END CAP, LIMIT STOP
229	0508870003	PIN, Taper 4/0 x 1.00 Lg.
230	6029020803	WASHER, Limit stop
231	6032108406	PLATE, Anchor, limit stop
232	6032104907	PLATE, Bearing
233	1000160009	PULLEY, Timing 42 Grooves
234	0508870003	PIN, Taper 4/0 x 1.00 Lg.
235	0502270225	SPACER, Sleeve .257, ID, .500 OD
236	6032071308	CAPACITOR, Var, Vacuum, 1000pf
237	6032108716	SHIM, Limit Stop .005 THK
238	6032108708	SHIM, Limit Stop .002 THK
239	0841860009	BELT, Timing

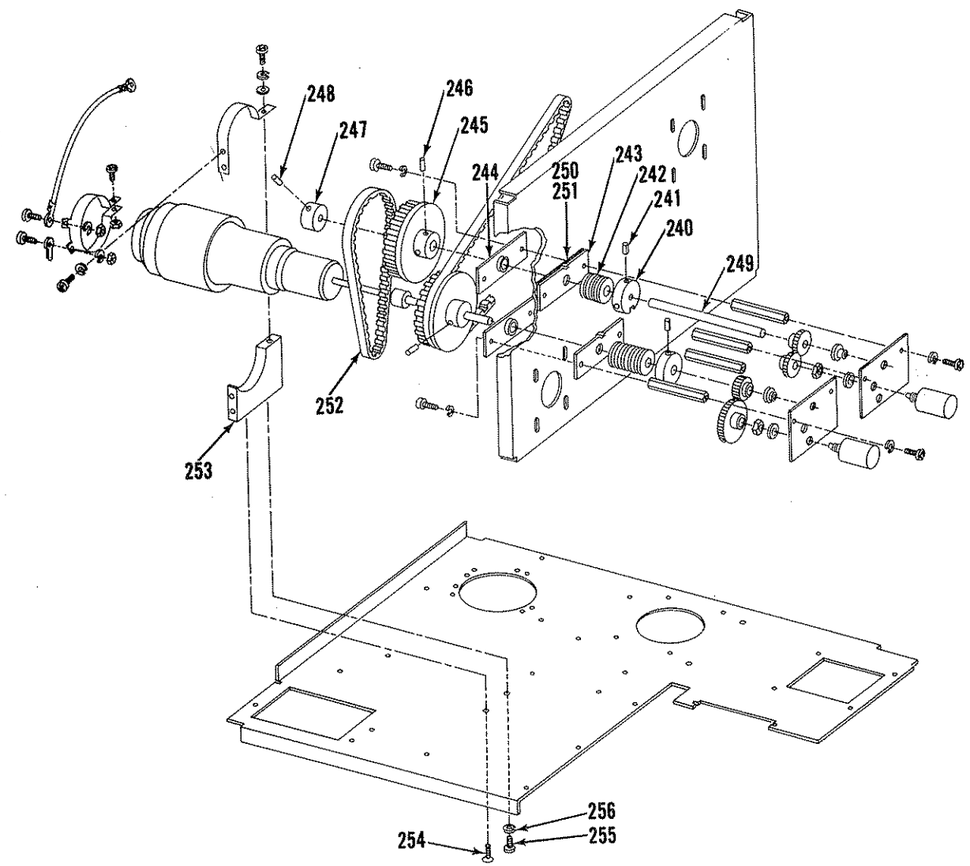

FIGURE 6-6 RF CHASSIS ASSEMBLY (SHEET 8 of 10)

FIGURE 6-6 RF CHASSIS ASSEMBLY SHEET 8

ITEM NO	SUNAIR PART NUMBER	DESCRIPTION
	6032110095	LIMIT STOP ASSEMBLY, Load drive
240	5026050301	END CAP, Limit stop
241	0508870003	PIN, Taper, 4/0 x 1.00 Lg.
242	6029020803	WASHER, Limit stop
243	6032108406	PLATE, Anchor, limit stop
244	6032104907	PLATE, Bearing
245	1000160009	PULLEY, Timing 42 Grooves
246	0508870003	PIN, Taper 4/0 x 1.00 Lg.
247	6032105903	COUPLING, RF Disc
248	0508890004	PIN, Taper 4/0 x .750 Lg.
249	0501770003	SHAFT, .2497 OD, 4.500 Lg.
250	6032108716	SHIM, Limit Stop .005 THK
251	6032108708	SHIM, Limit Stop .002 THK
252	0841830002	BELT, Timing
253	6032106608	PLATE, Mounting, Capacitor Base
254	0500710066	SCREW, Machine, FH 6-32 x 3/8 Lg.
255	0500890064	SCREW, Machine, PH 6-32 x 3/8 Lg.
256	0500040001	WASHER, Lock #6

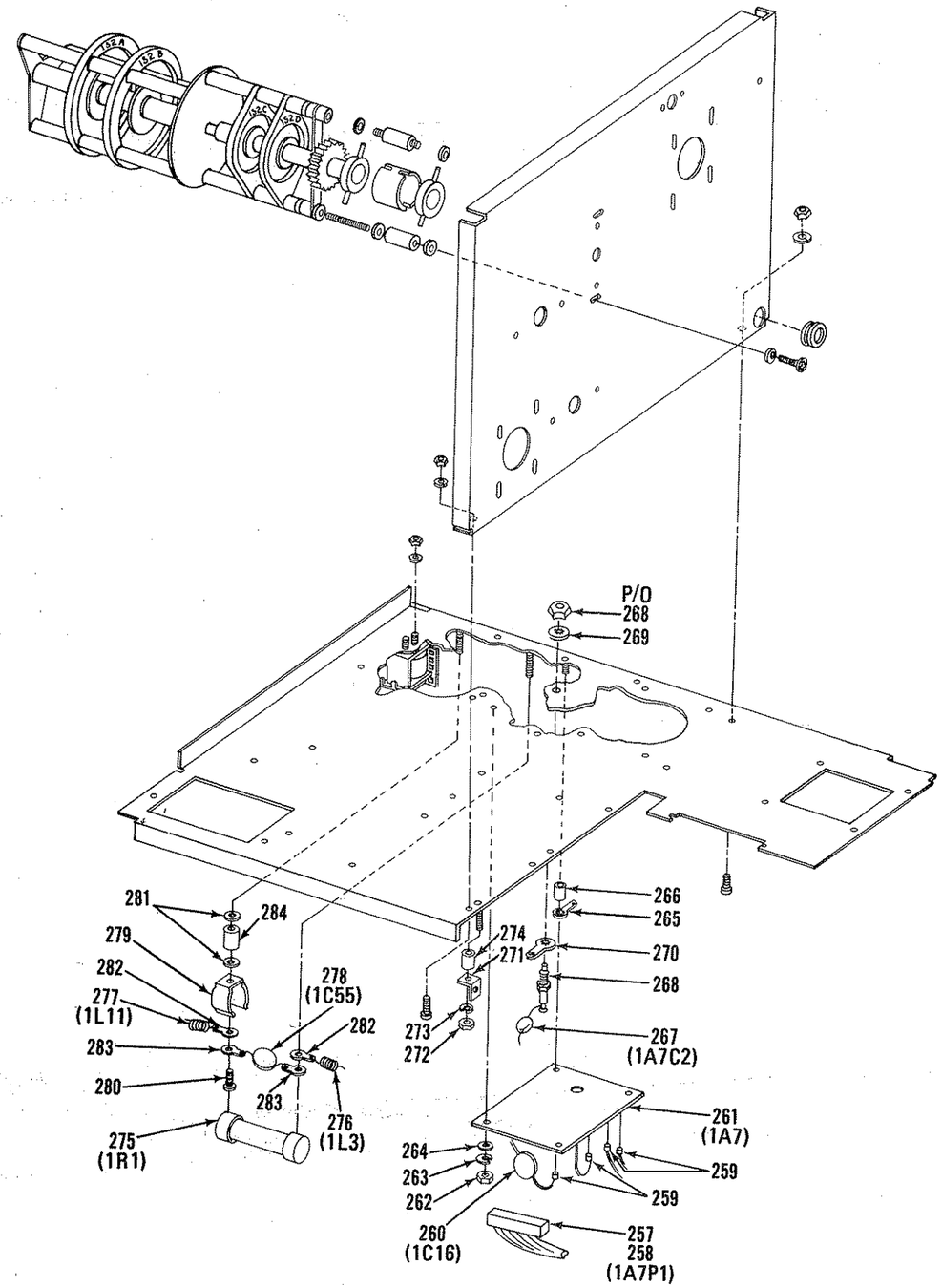

FIGURE 6-6 RF CHASSIS ASSEMBLY (SHEET 9 of 10)

FIGURE 6-6 RF CHASSIS ASSEMBLY SHEET 9

ITEM NO	SUNAIR PART NUMBER	DESCRIPTION
257	0754160009	CONNECTOR, Plug, electrical PC, 15 Pin Female
258	0754180000	PIN, Connector, crimp, male
259	0754100006	JACK PCB, Press-In
260	0243550006	CAPACITOR, Fixed .01µf, 1000V, Z5U, 20%
261	6032005097	CIRCUIT CARD ASSEMBLY, RF Sensor 1A7
262	0501900004	NUT, Hex 6-32 x 5/16 AF
263	0500040001	WASHER, Lock #6
264	0500200009	WASHER, Flat #6
265	0502050004	TERMINAL, Lug IT No. 6
266	0502270632	SPACER, Sleeve .140 ID, .250 OD, .812 Lg.
267	0286120003	CAPACITOR, Fixed 500pf, 500V, DM 15, 5%
268	1004620004	TERMINAL, Feedthru, insulating 10-32
269	0500140006	WASHER, Lock #10
270	0502070005	TERMINAL, Lug IT No. 10
271	0508920001	BRACKET, Angle, 6-32 Tap Hole
272	0501880003	NUT, Hex 4-40 x 3/16 AF
273	0500020001	WASHER, Lock #4
274	0502270608	SPACER, Sleeve .140 ID, .250 OD, .500 Lg.
275	6032071502	RESISTOR, Fixed 50, 10%, 30 W
276	6032110192	INDUCTOR ASSY
277	6032110206	INDUCTOR, Choke, .24uh
278	0260420000	CAPACITOR, Fixed 20pf, 500V, DM10, 5%
279	0850000009	FUSE CLIP, 31-60 Amp, 250V
280	0500910073	SCREW, Machine PH 8-32 x 7/16 Lg.
281	0500340005	WASHER, Flat #10
282	0502060000	TERMINAL, Lug IT NO. 8
283	0502450002	TERMINAL, Lug Plain NO. 8
284	1001090021	STANDOFF, F-F, 8-32, .750 Lg.

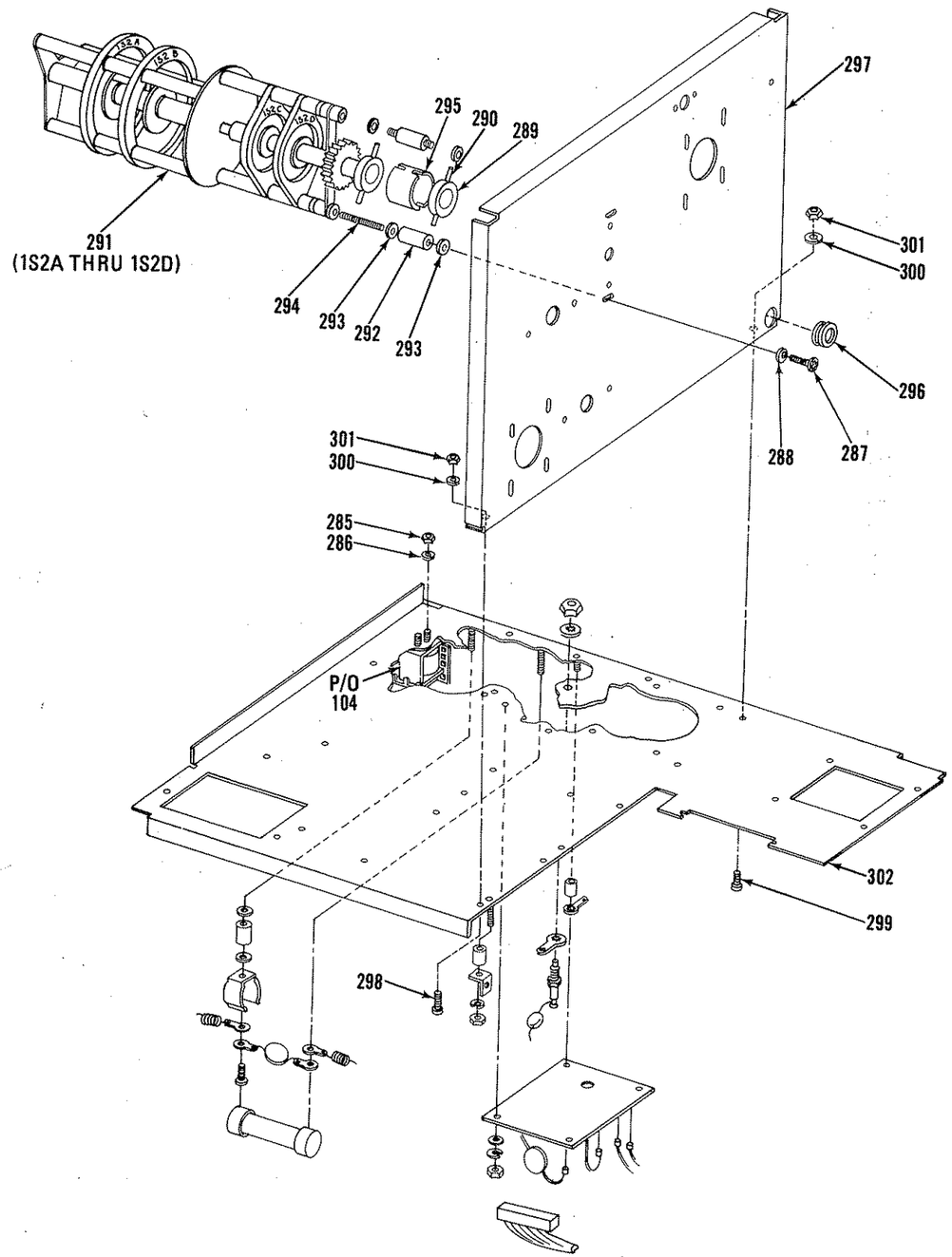

FIGURE 6-6 RF CHASSIS ASSEMBLY (SHEET 10 of 10)

FIGURE 6-6 RF CHASSIS ASSEMBLY SHEET 10

ITEM NO	SUNAIR PART NUMBER	DESCRIPTION
285	0501910000	NUT, Hex 6-32 x 1/4 AF
286	0500040001	WASHER, Lock #6
	6032300498	BANDSWITCH ASSEMBLY, RF
287	0500910081	SCREW, Machine PH 8-32 x 1/2 Lg.
288	0500210004	WASHER, Flat #8, .375 OD
289	6032105903	COUPLING, RF Disc
290	0508890004	PIN, Taper 4/0 x .750 Lg.
291	6032300404	SWITCH, RF
292	0509010008	STANDOFF, F-F, 8-32, 2.0 Lg.
293	0500340005	WASHER, Flat #10 .500 OD
294	0538010100	ROD, Threaded 8-32 x 5/8 Lg.
295	6032106004	SLEEVE, Insulator
296	0500540004	GROMMET, Rubber
297	6032101401	PARTITION, RF
298	0500710066	SCREW, Machine FH 6-32 x 3/8 Lg.
299	0500890064	SCREW, Machine PH 6-32 x 3/8 Lg.
300	0500040001	WASHER, Lock #6
301	0501900004	NUT, Hex 6-32 x 5/16 AF
302	6032101304	BASE PLATE, RF

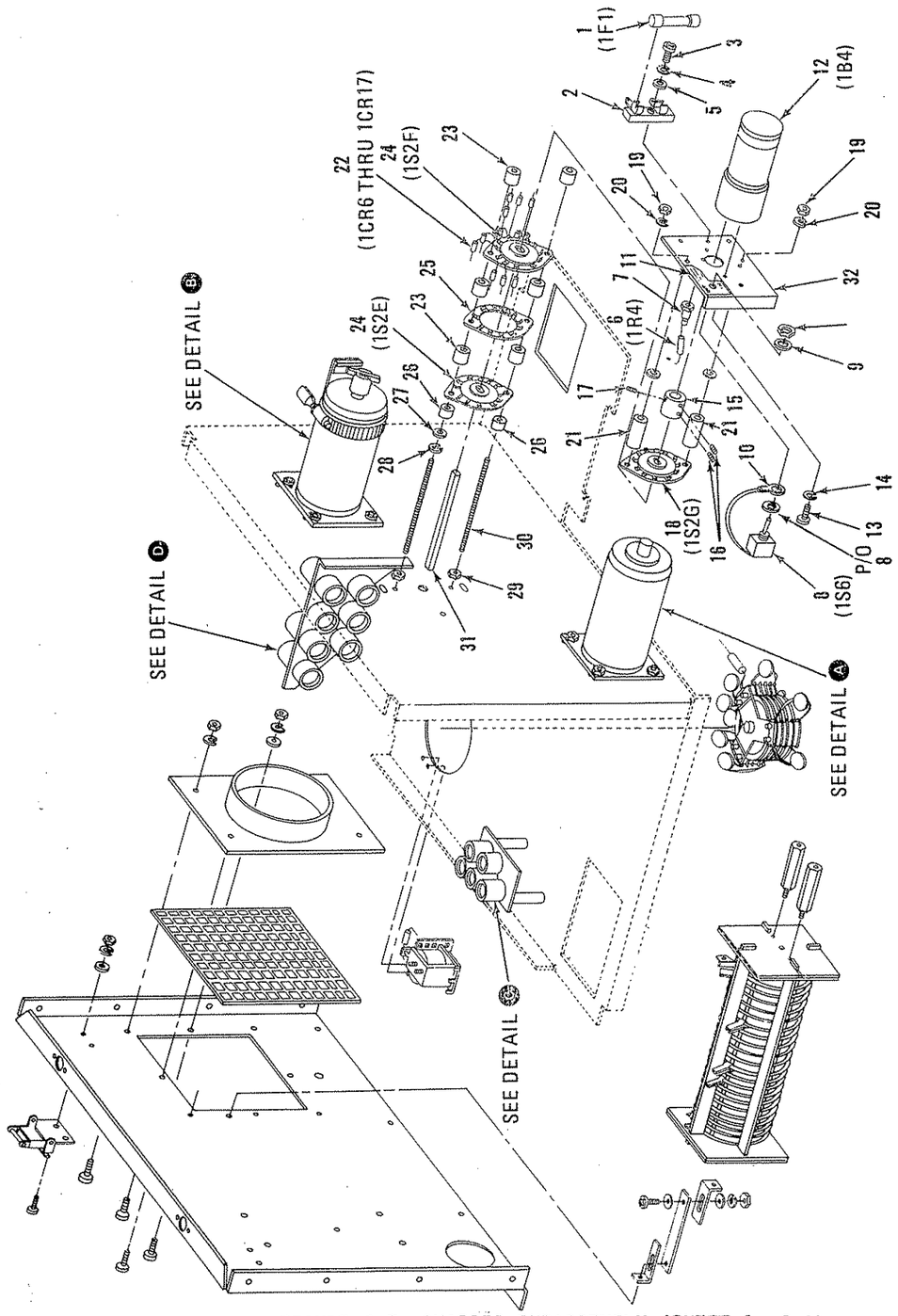

FIGURE 6-7 CHASSIS SUBASSEMBLY (SHEET 1 of 4)

FIGURE 6-7 CHASSIS SUBASSEMBLY SHEET 1

ITEM NO	SUNAIR PART NUMBER	DESCRIPTION
	60321200XX	RF CHASSIS SUBASSEMBLY
1	0841310009	FUSE, MDL, 1/2 AMP, 250V Slo-Blow
2	0848620003	FUSEHOLDER, 1 Pole w/Terminals
3	0500850062	SCREW, Machine PH 4-40 x 3/8 Lg.
4	0500020001	WASHER, Lock #4
5	0502560002	WASHER, Flat #4
6	0167480006	RESISTOR, Fixed 1K, 10% 1/2W
7	0506390004	TERMINAL, Stud 4-40 Female
8	0346370001	SWITCH, Toggle DPDT
9	0501620001	WASHER, Flat .260 ID .375 OD
10	0502470003	TERMINAL, Lug Plain .250 ID
11	6032103102	LABEL, 50 OHM Test Switch
12	6032071103	MOTOR, Gearhead 187:1
13	0500850038	SCREW, Machine PH 4-40 x 3/16 Lg.
14	0500020001	WASHER, Lock #4
15	0840710003	COUPLING, Shaft 3/16-1/4
16	0502180021	SETSCREW, 6-32 x 1/8 Lg., Cup
17	0502160021	SETSCREW, 4-40 x 1/8 Lg., Cup
18	5026031404	WAFER, Switch 30 Deg
19	0501890009	NUT, Hex 5-40 x 5/16 AF
20	0500030006	WASHER, Lock #5
21	0502270624	SPACER, Sleeve .140 ID, .250 OD, 1.000 Lg.
22	0405180004	DIODE, Rectifier, 1N4004, 400V, 1A
23	0502270357	SPACER, Sleeve .140 ID, .250 OD, .375 Lg.
24	6032030105	WAFER, Switch 1 Pole, 11 Pos.
25	6032108201	WAFER, Switch, Dummy
26	0502270560	SPACER, Sleeve .156 ID, .218 OD, .250 Lg.
27	0500190003	WASHER, Flat #5
28	0500030006	WASHER, Lock #5
29	0501890009	NUT, Hex 5-40 x 5/16 AF
30	0502380543	ROD, Threaded 5-40 x 3 3/8 Lg.
31	6032030300	SHAFT, .250 OD 3-120 Lg.
32	6032102408	PLATE, Bandswitch Motor

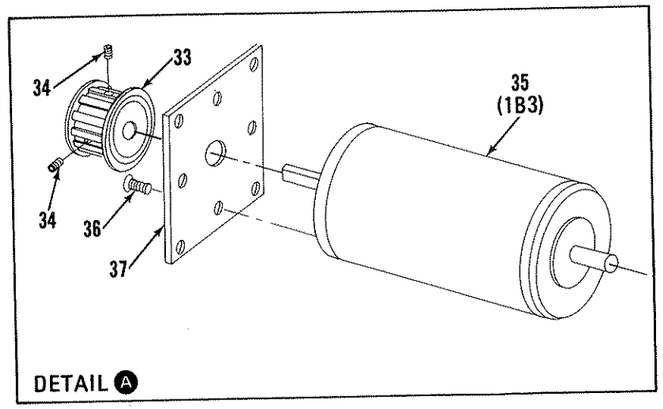

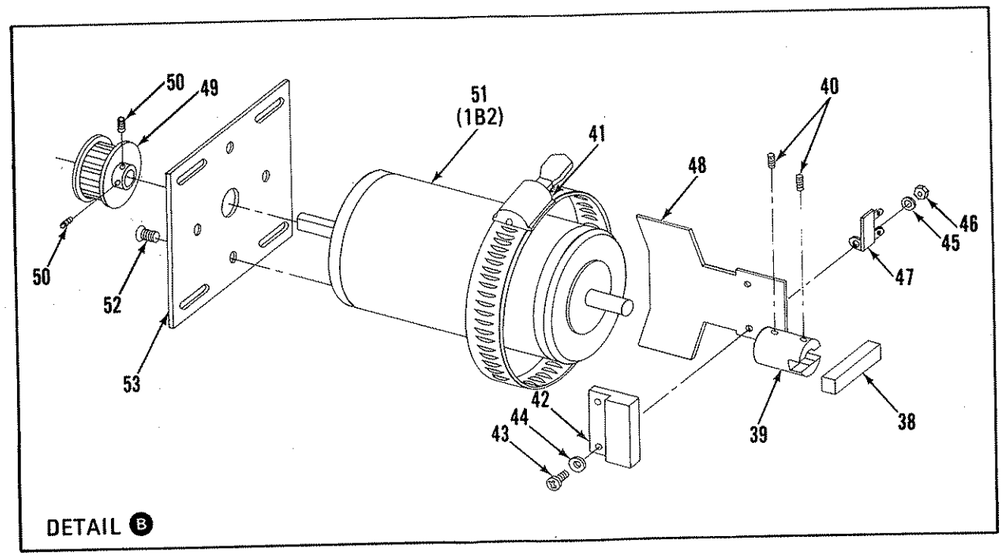

FIGURE 6-7 CHASSIS SUBASSEMBLY (SHEET 2 of 4)

FIGURE 6-7 CHASSIS SUBASSEMBLY SHEET 2

ITEM NO	SUNAIR PART NUMBER	DESCRIPTION
33	1004240015	PULLEY, Timing Hubless, 15 Grooves
34	0502200022	SETSCREW, 8-32 x 1/8 Lg. Cup
35	5026012302	MOTOR, 24 VDC
36	0500890048	SCREW, Machine PH 6-32 x 1/4 Lg.
37	6032102301	PLATE, Motor mounting
38	0850120004	MAGNET, 1/4 x 1/4 x 1 Lg.
39	6032102904	COUPLING, Magnetic
40	0502180021	SETSCREW, 6-32 x 1/8 Lg., Cup
41	0521270006	CLAMP, Hose, Size 28
42	6032103803	SWITCH, Proximity
43	0500850071	SCREW, Machine PH 4-40 x 7/16 Lg.
44	0500180008	WASHER, Flat #4
45	0500020001	WASHER, Lock #4
46	0501870008	NUT, Hex 4-40 x 1/4 AF
47	0996700021	TERMINAL, Strip, 2 Term, 1 Gnd.
48	6032103005	BRACKET, Reed Switch Mtg.
49	0841430004	PULLEY, Timing 11 Grooves
50	0502200022	SETSCREW, 8-32 x 1/8 Lg. Cup
51	5026012302	MOTOR, 24 VDC
52	0500890048	SCREW, Machine PH 6-32 x 1/4 Lg.
53	1004700008	PLATE, Motor mounting, Slotted

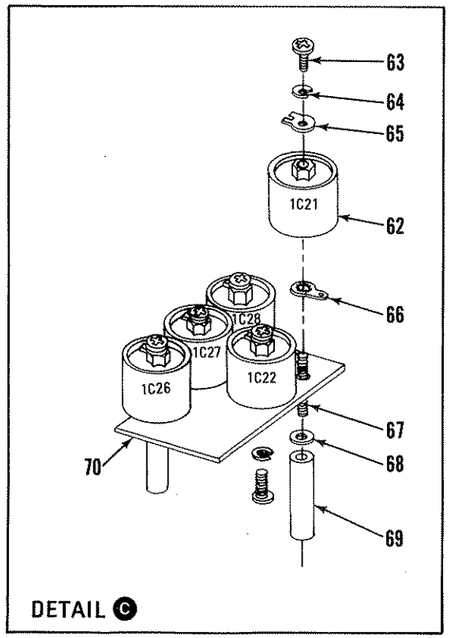

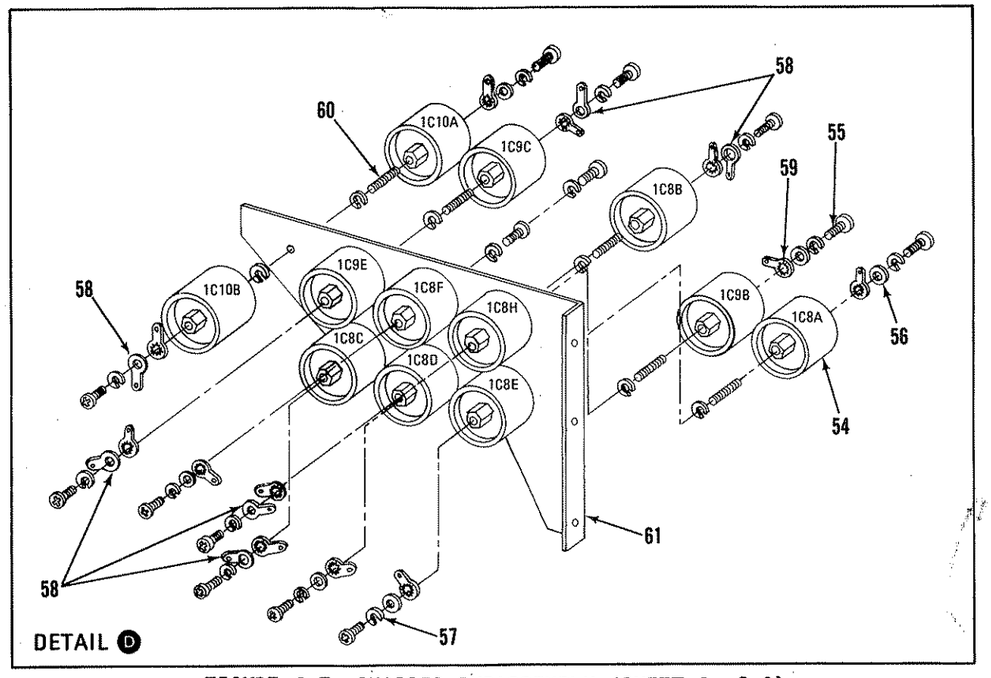

FIGURE 6-7 CHASSIS SUBASSEMBLY (SHEET 3 of 4)

FIGURE 6-7 CHASSIS SUBASSEMBLY SHEET 3

ITEM NO	SUNAIR PART NUMBER	DESCRIPTION
54	0290440009	CAPACITOR, Fixed 100pf, 5KV, N750
55	0500890048	SCREW, Machine PH 6-32 x 1/4 Lg.
56	0500810001	WASHER, Flat, #6
57	0500040001	WASHER, Lock #6
58	0502440007	TERMINAL, Lug Plain No. 6
59	0539660001	TERMINAL, Lug IT No. 6
60	0537960082	ROD, 6-32 x 1/2 Lg.
61	6032110303	BRACKET, Capacitor Mounting
62	0290440009	CAPACITOR, Fixed 100pf, 5KV, N750
63	0500890048	SCREW, Machine PH 6-32 x 1/4 Lg.
64	0500040001	WASHER, Lock #6
65	0507860004	TERMINAL, Lug Plain .156 ID
66	0502050004	TERMINAL, Lug IT No. 6
67	0537960082	ROD, Threaded 6-32 x 1/2 Lg.
68	0539300004	WASHER, Flat #6
69	0840990006	STANDOFF, F-F, 6-32 1.000L
70	6032104605	PLATE, Capacitor Mounting

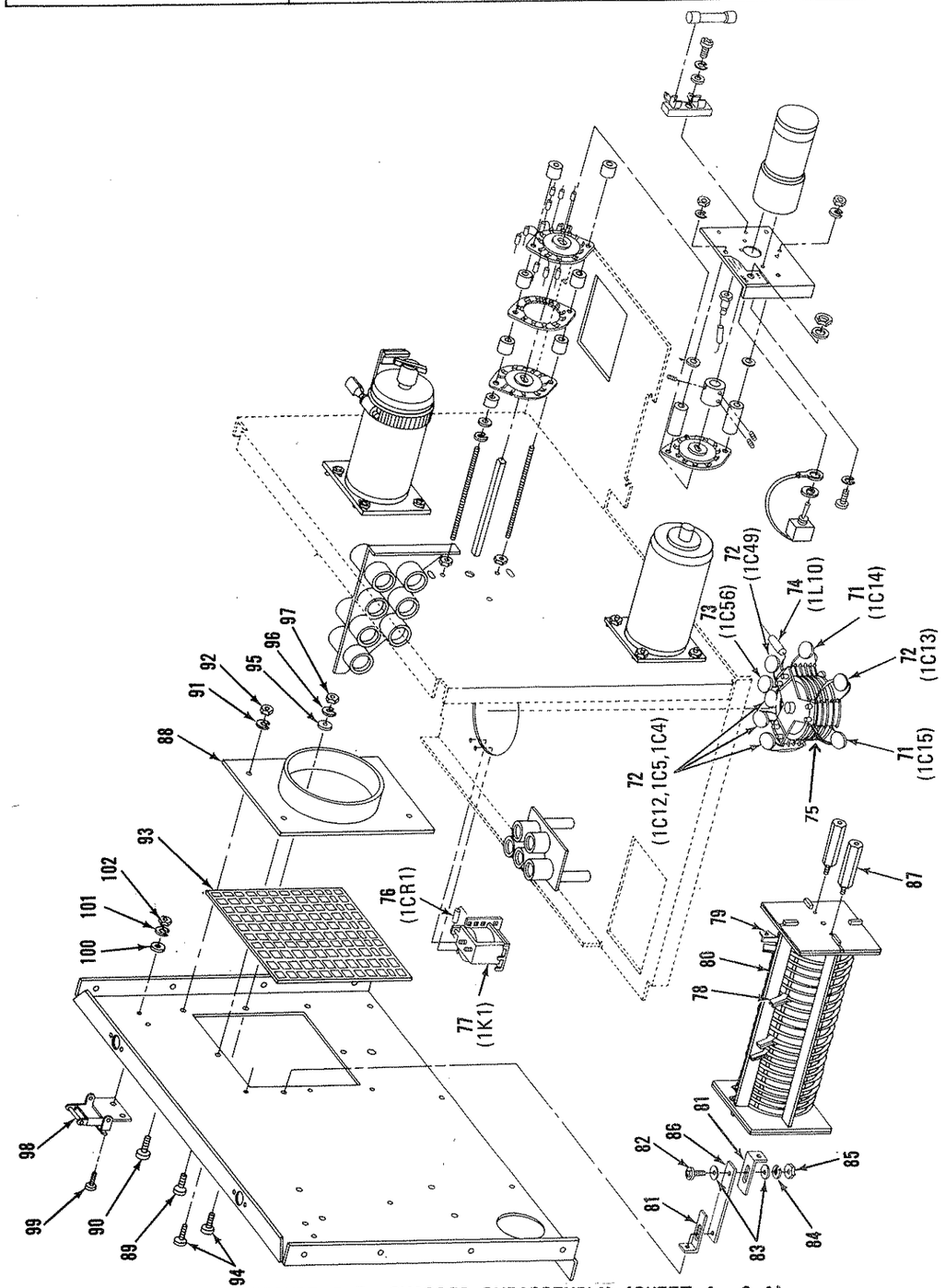

FIGURE 6-7 CHASSIS SUBASSEMBLY (SHEET 4 of 4)

FIGURE 6-7 CHASSIS SUBASSEMBLY SHEET 4

ITEM NO	SUNAIR PART NUMBER	DESCRIPTION
71	0295010002	CAPACITOR, Fixed .001µf, 1000V, Z5R, 10%
72	0243550006	CAPACITOR, Fixed .01µf, 1000V, Z5U, 20%
73	0252320000	CAPACITOR, Fixed 75pf, 500V, DM 15, 5%
74	0653590008	INDUCTOR, 2000µh, 5%
75	6032072509	SOCKET, Tube
76	0405180004	DIODE, Rectifier, 1N4004, 400V, 1A
77	0667310002	RELAY, DPDT, 12V
78	0506650006	CLIP, Air Dux
79	0539280003	TERMINAL, Lug Ring .144 ID
80	6032105008	COIL, Inductor Assembly
81	6032140806	BRACKET, Angle
82	0500910065	SCREW, Machine PH 8-32 x 3/8 Lg.
83	0500210004	WASHER, Flat #8
84	0500060002	WASHER, Lock #8
85	0501930001	NUT, Hex 8-32 x 11/32 AF
86	6032104508	PLATE, Mounting
87	1004240007	STANDOFF, M-F, 6-32, 1.50 Lg.
88	1003450008	SUPPORT, Vent
89	0500890072	SCREW, Machine PH 6-32 x 7/16 Lg.
90	0500890102	SCREW, Machine PH 6-32 x 5/8 Lg.
91	0500040001	WASHER, Lock #6
92	0501900004	NUT, Hex 6-32 x 5/16 AF
93	6032106802	SHIELD, Exhaust Port
94	0500890056	SCREW, Machine PH 6-32 x 5/16 Lg.
95	0500200009	WASHER, Flat #6
96	0500040001	WASHER, Lock #6
97	0501900004	NUT, Hex 6-32 x 5/16 AF
98	0526370017	CATCH, Hold down Blk.
99	0500851221	SCREW, Machine PH 4-40 x 3/4 Lg. Blk.
100	0500180008	WASHER, Flat, #4
101	0500020001	WASHER, Lock #4
102	0501870008	NUT, Hex 4-40 x 1/4 AF
103	60321089XX	PANEL, Rear, Upper

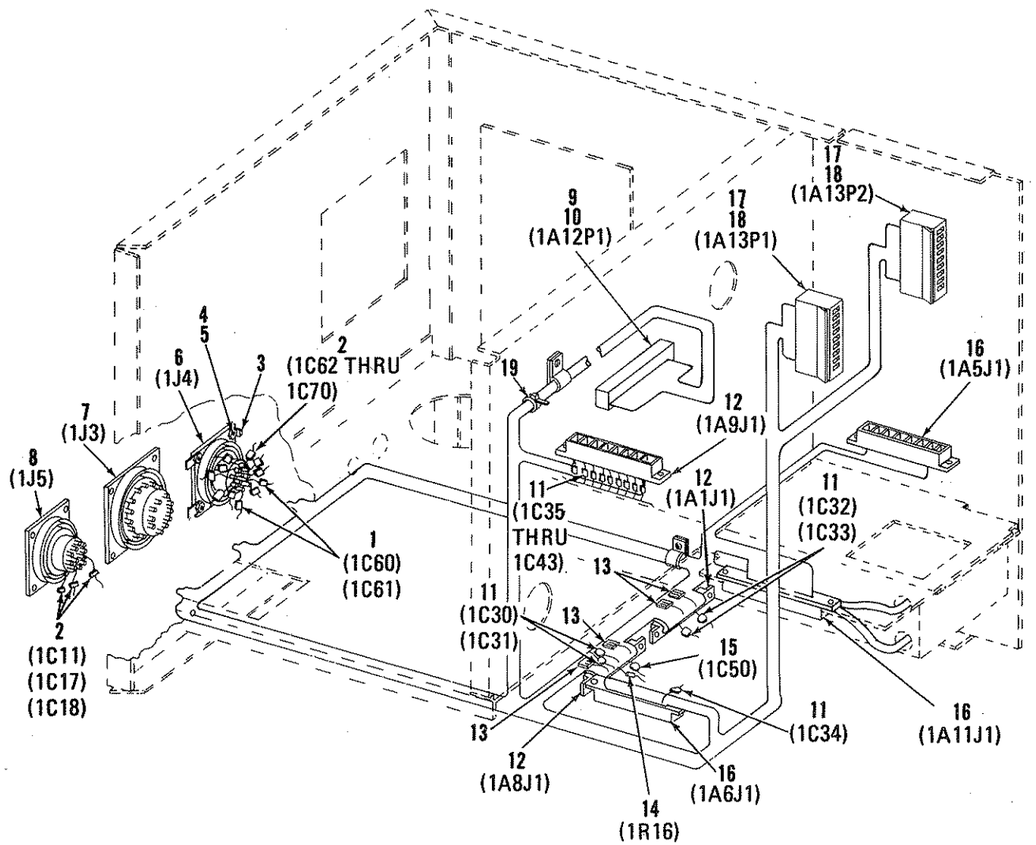

FIGURE 6-8 MAIN HARNESS

FIGURE 6-8 MAIN HARNESS

ITEM NO	SUNAIR PART NUMBER	DESCRIPTION
	6032015092	HARNESS, Main
1	0296040002	CAPACITOR, Fixed .01µf, 1000V, X5P, 10%
2	0283370009	CAPACITOR, Fixed .47µf, 50V, X5V, 20%
3	0502050004	TERMINAL, Lug IT No. 6
4	0500890072	SCREW, PH 6-32 x 7/16 Lg.
5	0501900004	NUT, Hex 6-32 x 5/16 AF
6	0754350002	CONNECTOR, Power, 12 Pin Round, Female
7	0754200001	CONNECTOR, Power, 15 Pin Round, Male
8	0754310001	CONNECTOR, Power, 37 Pin Round, Male
9	0754160009	CONNECTOR, PC, 15 Pin, Female
10	0754180000	CONTACT, Pin Male
11	0295010002	CAPACITOR, Fixed .001µf, 1000V, Z5R, 10%
12	0749720000	CONNECTOR, PC, 18 Pin Female
13	0536050007	TERMINAL, Slide on, .187 Female
14	0171560001	RESISTOR, Fixed 1K, 10%, 1/4 W
15	1001010027	CAPACITOR, Fixed .1µf, 50V
16	0755980000	CONNECTOR, PC, 18 Pin Female
17	1001020031	CONNECTOR, Molex Plug 9 Pin
18	0754180000	CONTACT, Pin Male
19	0600240002	TIE, Cable 4 Lg. 3/4 Dia.

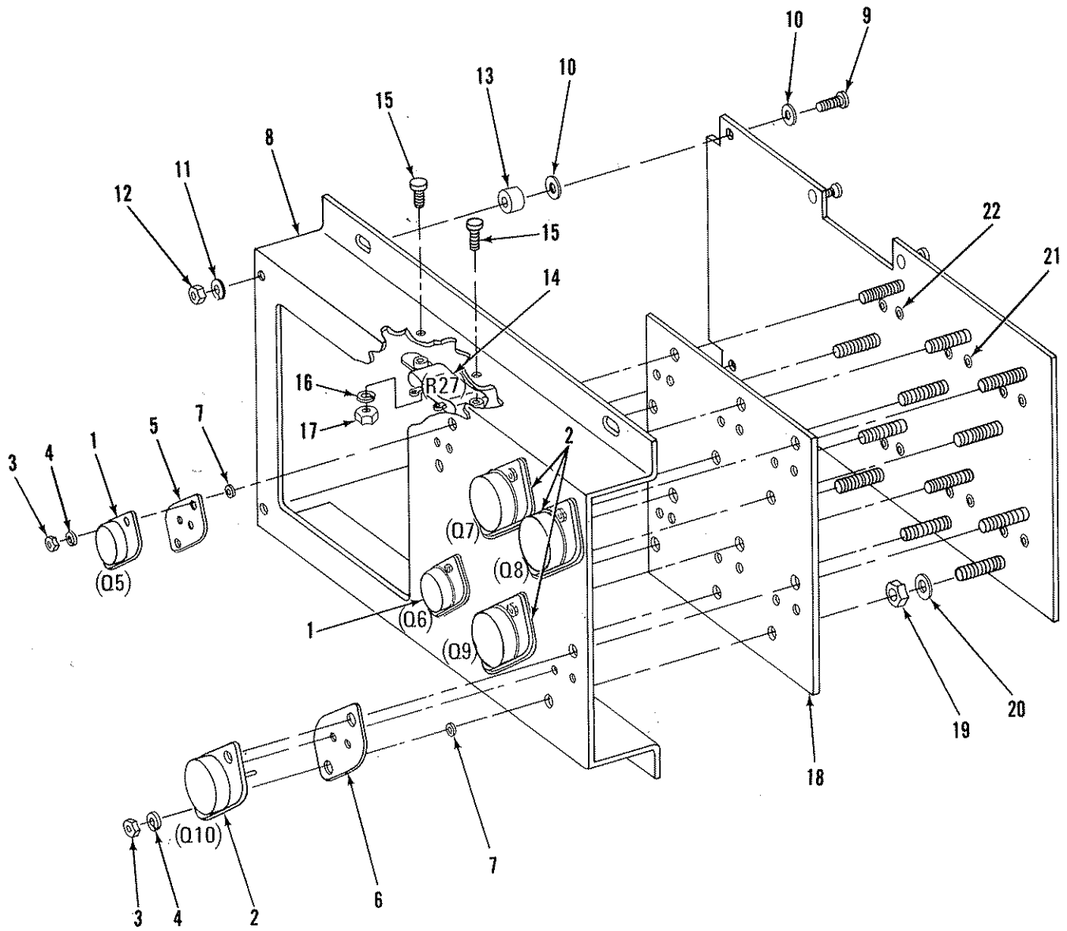

PREFIX ALL REFERENCE DESIGNATORS WITH 1A1 OR 1A8

FIGURE 6-9 SERVO AMPLIFIER ASSEMBLY

FIGURE 6-9 SERVO AMPLIFIER ASSEMBLY

ITEM NO	SUNAIR PART NUMBER	DESCRIPTION
	6029080091	CIRCUIT CARD ASSEMBLY, Servo
1	0448360004	TRANSISTOR, 2N3741 Power, TO-66
2	0448370000	TRANSISTOR, 2N3772 Power, TO-3
3	0501910000	NUT, Hex 6-32 x 1/4 AF
4	0500040001	WASHER, Lock #6
5	0879050004	WASHER, Insulating TO-66
6	0440940001	WASHER, Insulating TO-3
7	0500260001	WASHER, Flat, Fiber, #6
8	6029080202	CHASSIS, Servo amplifier
9	0500850089	SCREW, Machine PH 4-40 x 1/2 Lg.
10	0500240001	WASHER, Flat, Fiber #4
11	0500020001	WASHER, Lock #4
12	0501880003	NUT, Hex 4-40 x 3/16 AF
13	0502270322	SPACER, Sleeve .146 ID, .218 OD, .128 Lg.
14	0193360004	RESISTOR, Fixed 0.1, 10%, 15 W
15	0500850089	SCREW, Machine PH 4-40 x 1/2 Lg.
16	0500020001	WASHER, Lock #4
17	0501880003	NUT, Hex 4-40 x 3/16 AF
18	6029080300	BOARD, Insulator
19	0508660009	NUT, Hex 6-32 x 1/4 AF Class 2
20	0500810001	WASHER, Flat #6
21	0754100006	JACK, Tip, Press-In
22	0754380009	JACK, Tip, Press-In

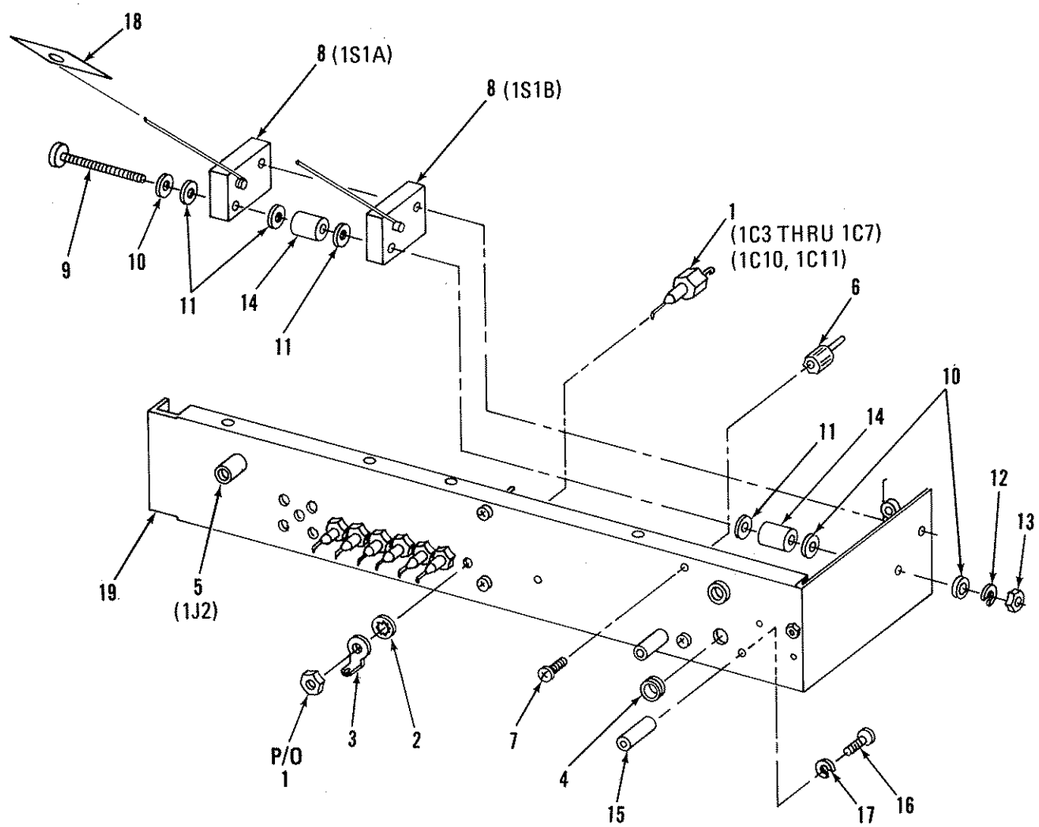

FIGURE 6-10 PLENUM ASSEMBLY

FIGURE 6-10 PLENUM ASSEMBLY

ITEM NO	SUNAIR PART NUMBER	DESCRIPTION
	6032012093	PLENUM ASSEMBLY
1	0276440005	CAPACITOR, Fixed 1000pf, 1000V, X5U, Feedthru
2	0501170006	WASHER, Lock #12
3	0502470003	TERMINAL, Lug Plain .250 ID
4	0500540004	GROMMET, Rubber
5	0743740009	CONNECTOR, RF, BNC UG-1094/U
6	0508980003	POST, 5/8" High
7	0500890056	SCREW, Machine PH 6-32 x 5/16 Lg.
8	6032071600	SWITCH, Micro SPDT
9	0500850364	SCREW, Machine PH 4-40 x 2 1/4 Lg.
10	0500180008	WASHER, Flat #4
11	0500240001	WASHER, Flat #4
12	0500020001	WASHER, Lock #4
13	0501870008	NUT, Hex 4-40 x 1/4 AF
14	0502270527	SPACER, Sleeve .112 ID, .187 OD, .312 Lg.
15	0501480005	INSULATOR, Standoff, F-F, 6-32
16	0500890064	SCREW, Machine PH 6-32 x 3/8 Lg.
17	0500040001	WASHER, Lock #6
18	0850240000	TAPE, Aluminum 2"
19	6032101509	PARTITION, Plenum

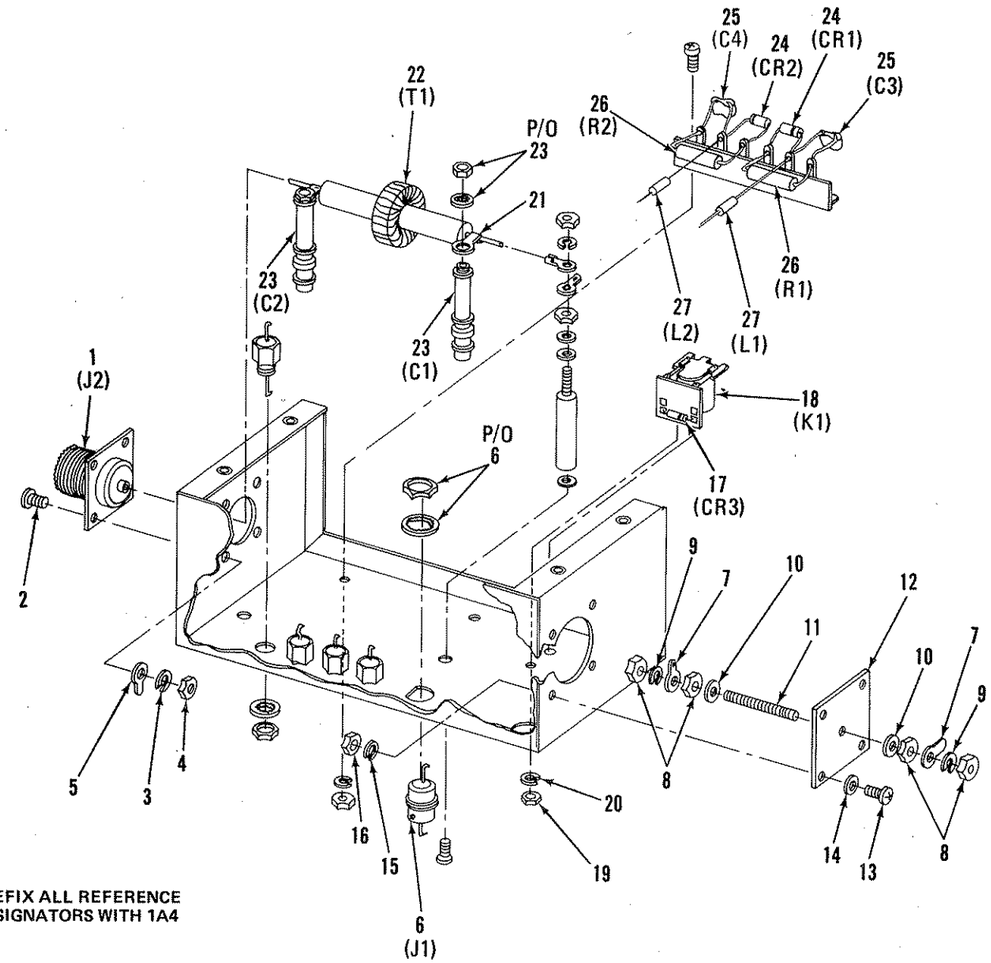

PREFIX ALL REFERENCE DESIGNATORS WITH 1A4

FIGURE 6-11 RF WATTMETER ASSEMBLY (SHEET 1 of 2)

FIGURE 6-11 RF WATTMETER ASSEMBLY SHEET 1

ITEM NO	SUNAIR PART NUMBER	DESCRIPTION
	6032020096	RF WATTMETER ASSEMBLY
1	0741920000	CONNECTOR, RF, UHF, SO-239, UG 296U
2	0500850054	SCREW, Machine PH 4-40 x 5/16 Lg.
3	0500020001	WASHER, Lock #4
4	0501870008	NUT, Hex 4-40 x 1/4 AF
5	0502420006	TERMINAL, Lug Plain No. 4
6	0743740009	CONNECTOR, RF, BNC UG-1094/U
7	0502450002	TERMINAL, Lug Plain #8
8	0502520001	NUT, Hex 8-32 x 11/32 AF
9	0500060002	WASHER, Lock #8
10	0502580003	WASHER, Flat #8 Lg.
11	0501740007	ROD, Threaded 8-32 x 1 Lg.
12	6032020304	INSULATOR, Plate
13	0500850054	SCREW, Machine PH 4-40 x 5/16 Lg.
14	0500180008	WASHER, Flat #4
15	0500020001	WASHER, Lock #4
16	0501870008	NUT, Hex 4-40 x 1/4 AF
17	0405180004	RECTIFIER, 1N4004, 400V, 1A
18	0667310002	RELAY, DPDT, 12V, 5A
19	0501900004	NUT, Hex 6-32 x 5/16 AF
20	0500040001	WASHER, Lock #6
21	0502460008	TERMINAL, Lug Plain No. 10
22	5025130204	TRANSFORMER, Toroid/Shield Assembly
23	1004880022	CAPACITOR, Variable .5-5pf, 7KV
24	0405460007	DIODE, Signal, Sil 1N3064
25	0258040009	CAPACITOR, Fixed 200pf, 500V, DM15, 5%
26	0186930003	RESISTOR, Fixed 22, 10%, 1/2 W
27	0653590008	INDUCTOR, Molded 2000µh, 5%

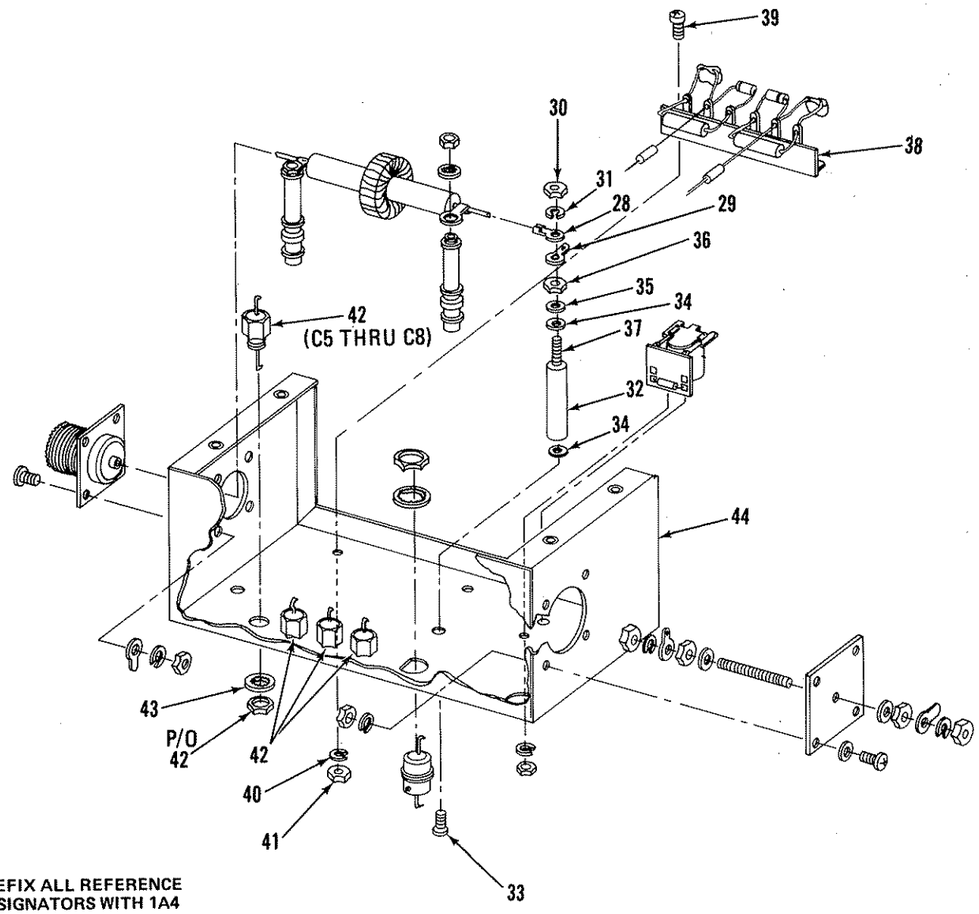

PREFIX ALL REFERENCE DESIGNATORS WITH 1A4

FIGURE 6-11 RF WATTMETER ASSEMBLY (SHEET 2 of 2)

FIGURE 6-11 RF WATTMETER ASSEMBLY SHEET 2

ITEM NO	SUNAIR PART NUMBER	DESCRITPION
28	0539540005	TERMINAL, Lug Ring .196 ID
29	0502050004	TERMINAL, Lug IT No. 6
30	0502500000	NUT, Hex 6-32 x 5/16 AF
31	0500040001	WASHER, Lock #6
32	0840990006	STANDOFF, F-F, 6-32 1.000 Lg.
33	0500890064	SCREW, Machine PH 6-32 x 3/8 Lg.
34	0539300004	WASHER, Flat #6
35	0502570008	WASHER, Flat #6 Lg.
36	0502500000	NUT, Hex 6-32 x 5/16 AF
37	0537960121	ROD, 6-32 x 3/4 Lg.
38	0848360001	TERMINAL BOARD, 8 Term, 2 Gnd.
39	0500850046	SCREW, PH 4-40 x 1/4 Lg.
40	0500020001	WASHER, Lock #4
41	0501870008	NUT, Hex 4-40 x 1/4 AF
42	0276440005	CAPACITOR, Fixed 1000pf, 1000V, X5U
43	0501170006	WASHER, Lock #12 .406 OD
44	6032020100	CHASSIS, Wattmeter

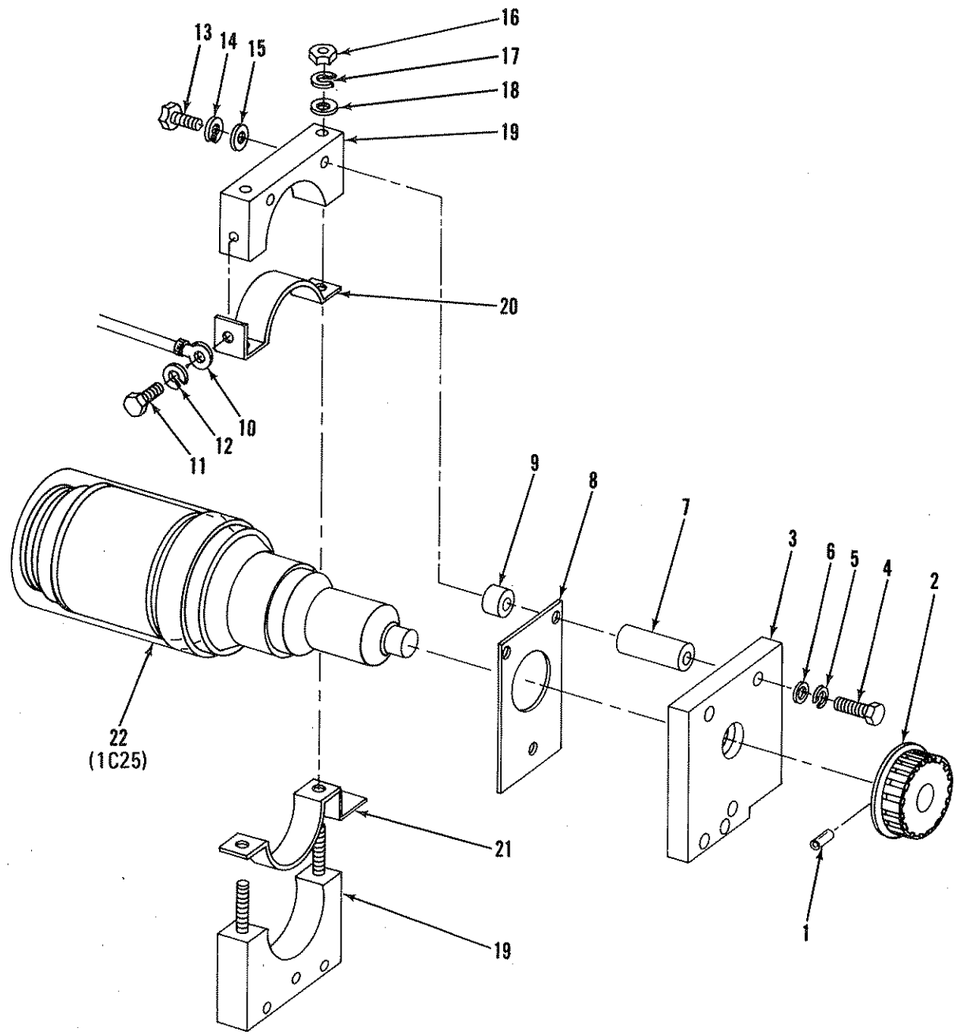

FIGURE 6-12 TUNING CAPACITOR ASSEMBLY

FIGURE 6-12 TUNING CAPACITOR ASSEMBLY

ITEM NO	SUNAIR PART NUMBER	DESCRIPTION
	6032071294	TUNING CAPACITOR ASSEMBLY
1	0508820006	PIN, Roll
2	6032030202	PULLEY, Gear 28T x 1/2 Bore
3	1002630029	BLOCK, Bearing, Vac. Cap.
4	0534850120	SCREW, Machine Hex Head 8-32 x 3/4 Lg.
5	0500060002	WASHER, Lock #8
6	0500210004	WASHER, Flat #8
7	1004890028	STANDOFF, F-F, 8-32 1.500 L
8	1004950004	PLATE, Blocking C25 Assembly
9	1004890036	SPACER, Sleeve .171 ID, .500 OD, .375
10	0539540005	TERMINAL, Lug Ring .196 ID
11	0534850049	SCREW, Machine Hex 8-32 x 1/4 Lg.
12	0500060002	WASHER, Lock #8
13	0534850243	SCREW, Machine Hex 8-32 x 1 1/2 Lg.
14	0500060002	WASHER, Lock #8
15	0500210004	WASHER, Flat #8
16	0501940006	NUT, Hex 10-32 x 3/8 AF
17	0500070008	WASHER, Lock #10
18	0500220000	WASHER, Flat #10
19	1002630037	BLOCK, Retaining, Vac. Cap.
20	1002630011	CONTACT, Capacitor, Vac. Upper
21	1004890010	CONTACT, Capacitor, Vac. Lower
22	6032071201	CAPACITOR, Variable, Vac. 400pf

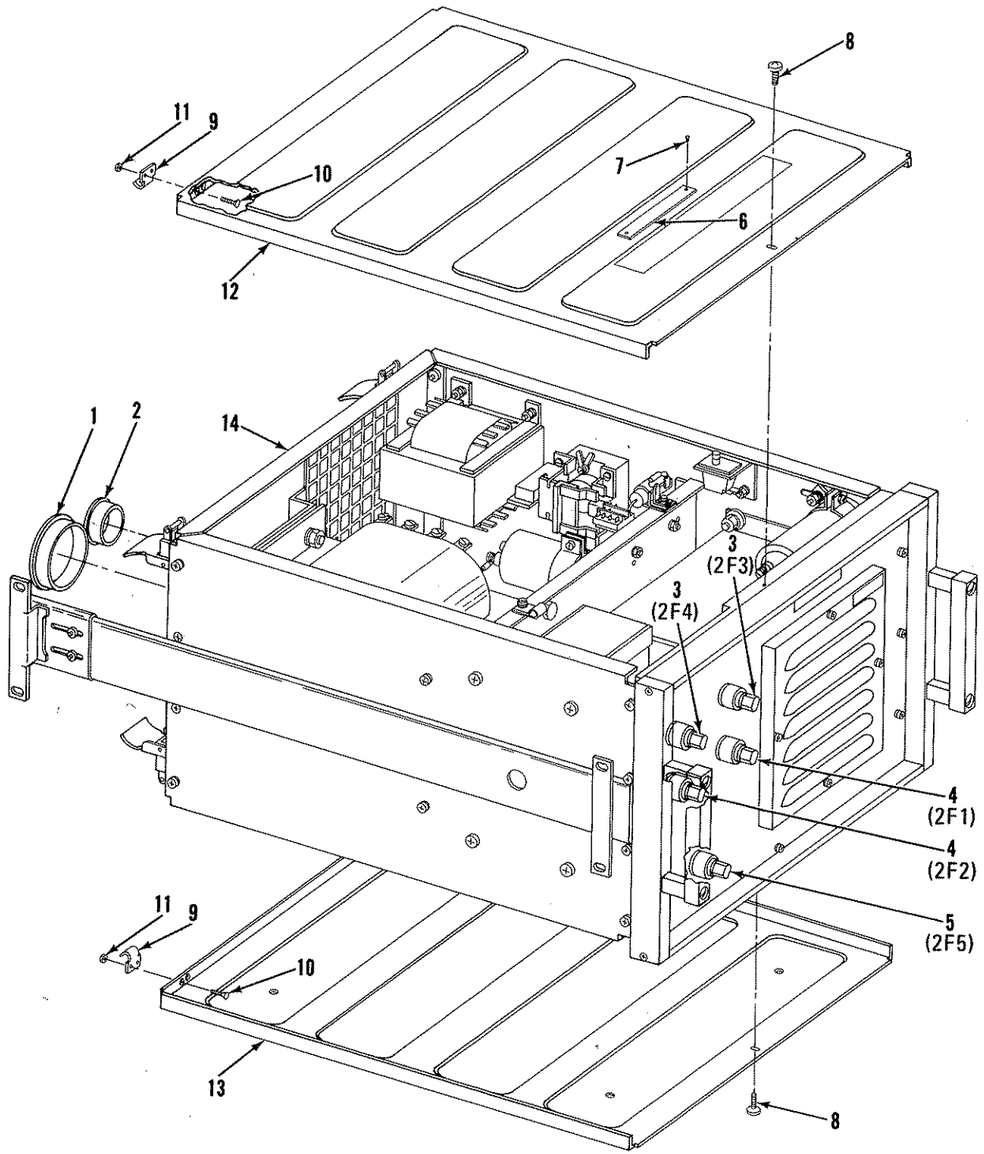

FIGURE 6-13 PS-1900A POWER SUPPLY

FIGURE 6-13 PS-1900A POWER SUPPLY

ITEM NO	SUNAIR PART NUMBER	DESCRIPTION
	PS-1900A	POWER SUPPLY
1	1004960034	CAP, Protective, dust EC-36
2	1004870027	CAP, Protective, dust EC-30
3	1002550017	FUSE, Cartridge 10A, 250V F3, F4, 115 VAC
	0841320004	FUSE, Cartridge 5A, 250V F3, F4, 230 VAC
4	1002550025	FUSE, Cartridge 30A, 250V F1, F2, 115 VAC
	0841330000	FUSE, Cartridge 15A, 250V F1, F2, 230 VAC
5	0848860004	FUSE, Cartridge 10A, 32V, AGC F5
	60320070XX	COVER ASSEMBLY
6	0107810000	LABEL, Warning High Voltage
7	0533180007	PIN, Drive No. 0 X 1/8 Lg.
8	0501230629	SCREW, Machine TR HD 6-32 x 3/8 Blk.
9	0526520001	STRIKE, Black
10	0500660425	SCREW, Machine FH 4-40 x 1/4 Lg. Blk.
11	0501880020	NUT, Hex 4-40 x 3/16 AF Blk.
12	60321033XX	COVER, Top
13	60321034XX	COVER, Bottom
14	60322000XX	FINAL ASSEMBLY, Power supply

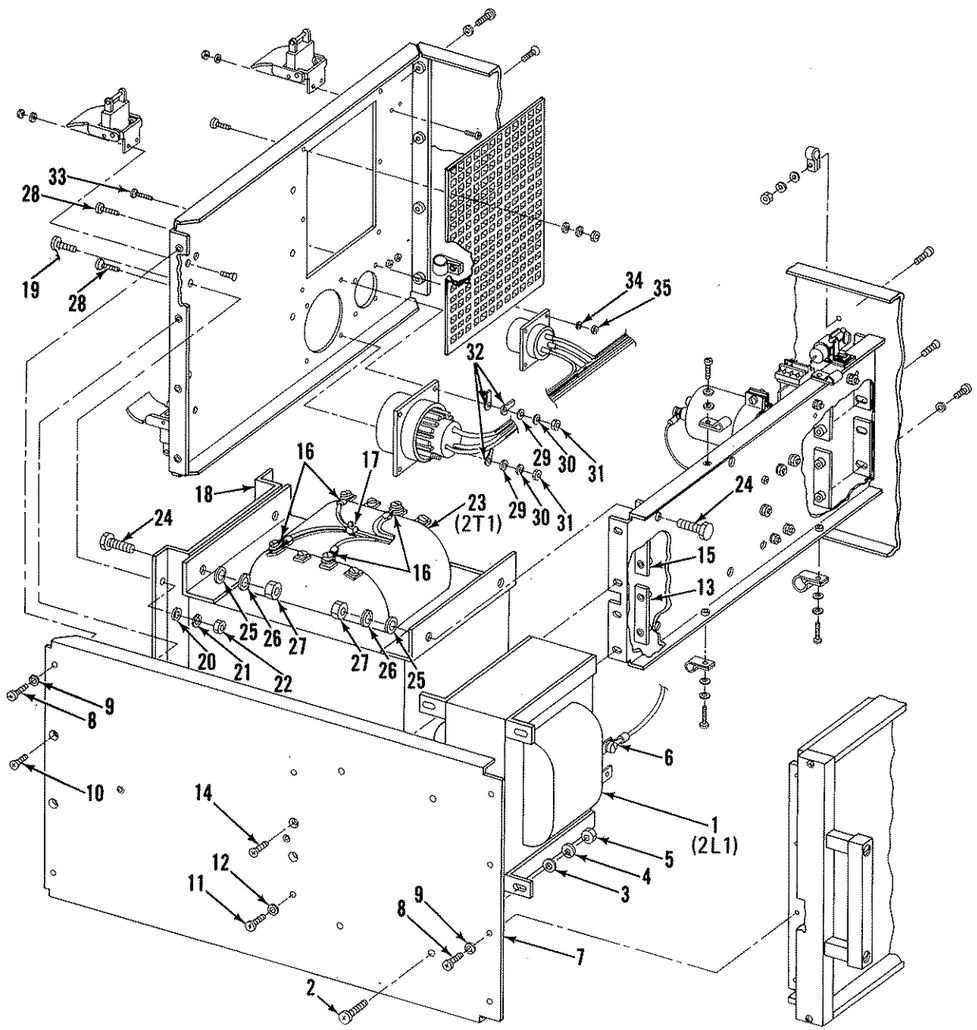

FIGURE 6-14 POWER SUPPLY FINAL ASSEMBLY (SHEET 1 of 3)

FIGURE 6-14 POWER SUPPLY FINAL ASSEMBLY SHEET 1

ITEM NO	SUNAIR PART NUMBER	DESCRIPTION
	60322000XX	FINAL ASSEMBLY, Power Supply
1	5025210402	REACTOR, 8 Hy
2	0525911022	SCREW, Machine PH 1/4-20 x 5/8 Lg. Blk.
3	0524050007	WASHER, Flat .250 ID .562 OD
4	0538370009	WASHER, Lock 1/4
5	0501950001	NUT, Hex 1/4-20 x 7/16 AF
6	0516950002	TERMINAL, Crimp, No. 10
7	60322010XX	PANEL, Left hand
8	0500911029	SCREW, Machine PH 8-32 x 5/8 Lg. Blk.
9	0500060029	WASHER, Lock #8 Blk.
10	0500730628	SCREW, Machine FH 8-32 x 3/8 Lg. Blk.
11	0500940827	SCREW, Machine PH 10-32 x 1/2 Lg. Blk.
12	0500070024	WASHER, Lock #10 Black
13	6032201350	NUT, Plate Power Supply 1.437
14	0525911022	SCREW, Machine PH 1/4-20 x 5/8 Lg. Blk.
15	6032201376	NUT, Plate Power Supply 2.0 Lg.
16	0516950002	TERMINAL, Crimp No. 10
17	0600240002	TIE, Cable 4 Lg. 3/4 Dia.
18	6032202208	BRACKET, Transformer mounting
19	0525910107	SCREW, Machine PH 1/4-20 x 5/8 Lg.
20	0524050007	WASHER, Flat .250 ID .562 OD
21	0538370009	WASHER, Lock 1/4
22	0501950028	NUT, Hex 1/4-20 x 7/16 AF Blk.
23	6032300102	PLATE TRANSFORMER
24	0501690000	SCREW, Hex Head 3/8-16 x 3/4 Lg.
25	0501780009	WASHER, Flat .406 ID .812 OD
26	0501650008	WASHER, Lock 3/8
27	0501700005	NUT, Hex 3/8-16 x 9/16 AF
28	0500910081	SCREW, Machine PH 8-32 x 1/2 Lg.4
29	0500210004	WASHER, Flat #8
30	0500060002	WASHER, Lock #8
31	0501930001	NUT, Hex 8-32 x 11/32 AF
32	0502060000	TERMINAL, Lug, IT No. 8
33	0500850089	SCREW, Machine PH 4-40 x 1/2 Lg.
34	0500020001	WASHER, Lock #4
35	0501870008	NUT, Hex 4-40 x 1/4 AF

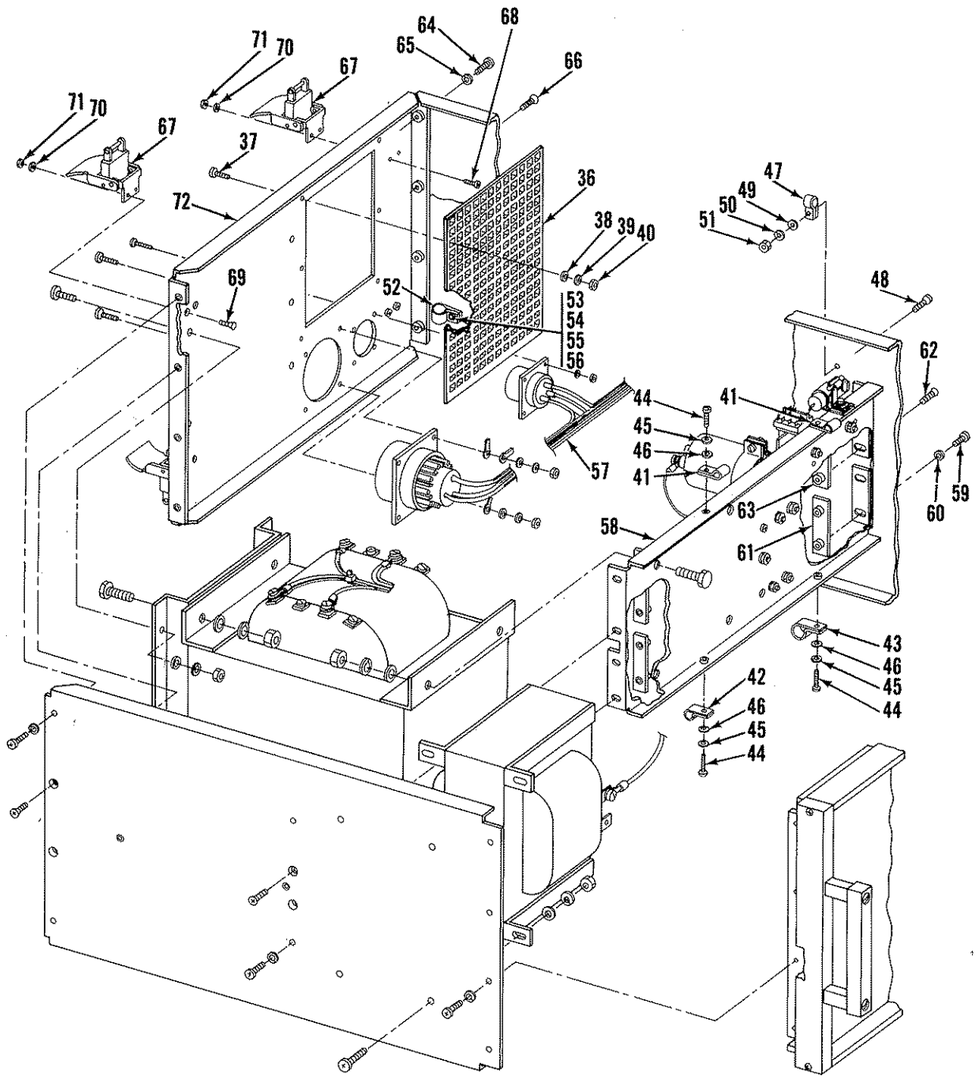

FIGURE 6-14 POWER SUPPLY FINAL ASSEMBLY (SHEET 2 of 3)

FIGURE 6-14 POWER SUPPLY FINAL ASSEMBLY SHEET 2

ITEM NO	SUNAIR PART NUMBER	DESCRIPTION
36	6032107001	SHIELD, Exhaust, PS
37	0500890064	SCREW, Machine PH 6-32 x 3/8 Lg.
38	0500200009	WASHER, Flat #6
39	0500040001	WASHER, Lock #6
40	0501900004	NUT, Hex 6-32 x 5/16 AF
41	0501840001	CLAMP, Loop 1/4 ID, 3/8W
42	0501960007	CLAMP, Loop 5/16 ID, 3/8W
43	0502130008	CLAMP, Loop 7/16 ID, 3/8W
44	0500890072	SCREW, Machine PH 6-32 x 7/16 Lg.
45	0500040001	WASHER, Lock #6
46	0500200009	WASHER, Flat #6
47	0502010002	CLAMP, Cable 3/8 ID, 3/8W
48	0500890820	SCREW, Machine PH 6-32 x 1/2 Lg. Blk.
49	0500200009	WASHER, Flat #6
50	0500040001	WASHER, Lock #6
51	0501910000	NUT, Hex 6-32 x 1/4 AF
52	0502010002	CLAMP, Loop 3/8 ID, 3/8W
53	0500910821	SCREW, Machine PH 8-32 x 1/2 Lg. Blk.
54	0500210004	WASHER, Flat #8
55	0500060002	WASHER, Lock #8
56	0502700009	NUT, Hex 8-32 x 5/16 AF
57	6032240096	HARNESS, Power Supply
58	6032220095	PARTITION ASSEMBLY, Power Supply
59	0500940827	SCREW, Machine PH 10-32 x 1/2 Lg. Blk.
60	0500070024	WASHER, Lock #10 Blk.
61	6032201350	NUT, Plate, Power Supply 1.437
62	0525911022	SCREW, Machine PH 1/4-20 x 5/8 Blk.
63	6032201376	NUT, Plate, Power Supply 2.0 Lg.
64	0500911029	SCREW, Machine PH 8-32 x 5/8 Lg. Blk.
65	0500060029	WASHER, Lock #8 Blk.
66	0500730628	SCREW, Machine FH 8-32 x 3/8 Lg. Blk.
67	0526370017	CATCH, Hold down Blk.
68	0500850054	SCREW, Machine PH 4-40 x 5/16 Lg.
69	0500660051	SCREW, Machine FH 4-40 x 5/16 Lg.
70	0500020001	WASHER, Lock #4
71	0501880003	NUT, Hex 4-40 x 3/16 AF
72	60322012XX	PANEL, Rear PS

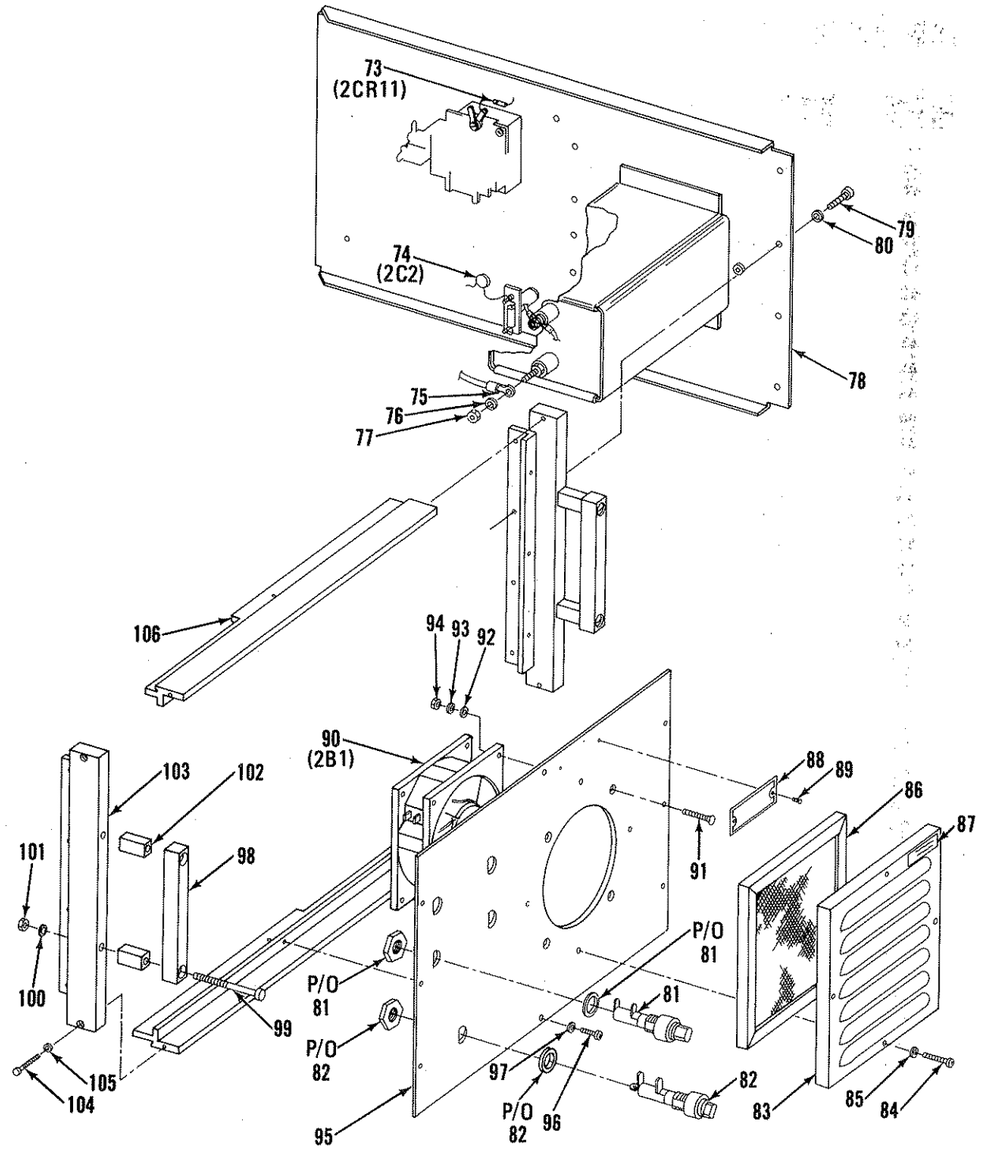

FIGURE 6-14 POWER SUPPLY FINAL ASSEMBLY (SHEET 3 of 3)

FIGURE 6-14 POWER SUPPLY FINAL ASSEMBLY SHEET 3

ITEM NO	SUNAIR PART NUMBER	DESCRIPTION
73	0405180004	DIODE, Rectifier, 1N4004, 400V, 1A
74	0289110009	CAPACITOR, Fixed .002µf, 6KV, Z5U, 20%
75	0516950002	TERMINAL, Crimp #10 Insul.
76	0500060002	WASHER, Lock #8
77	0501930001	NUT, Hex 8-32 x 11/32 AF
78	60322300XX	PANEL ASSEMBLY, Right hand
79	0500911029	SCREW, PH 8-32 x 5/8 Lg. Blk.
80	0500060029	WASHER, Lock #8 Blk.
81	0849910005	FUSEHOLDER, Panel Mount
82	1004880006	FUSEHOLDER, Indicating, 22 to 33V
83	60321041XX	HOLDER, Air filter
84	0500891222	SCREW, Machine PH 6-32 x 3/4 Lg. Blk.
85	0500040028	WASHER, Lock #6 Blk.
86	6032106900	FILTER, Air
87	1003030017	LABEL, Air Filter
88	6032050106	NAME PLATE, PS-1900A
89	0533180007	PIN, Drive No. 0 x 1/8 Lg.
90	0715940007	FAN, 115 VAC 50/60 Cycle 115 CFM
91	0500890820	SCREW, Machine PH 6-32 x 1/2 Lg. Blk.
92	0500200009	WASHER, Flat #6
93	0500040001	WASHER, Lock #6
94	0501900004	NUT, Hex 6-32 x 5/16 AF
95	60322014XX	PANEL, Front PS
96	0500890722	SCREW, Machine PH 6-32 x 7/16 Lg. Blk.
97	0500040028	WASHER, Lock #6 Blk.
98	6032202003	HANDLE
99	0525904026	SCREW, Machine Fil H 1/4-20, 2 1/2 Lg. Blk.
100	0538370009	WASHER, Lock 1/4
101	0501950028	NUT, Hex 1/4-20 x 7/16 AF Black
102	6032202101	SPACER, Handle
103	60322015XX	FRAME, Side
104	0500851221	SCREW, Machine PH 4-40 x 3/4 Lg. Black
105	0500020001	WASHER, Lock #4
106	60321019XX	FRAME, Top-Bottom Front

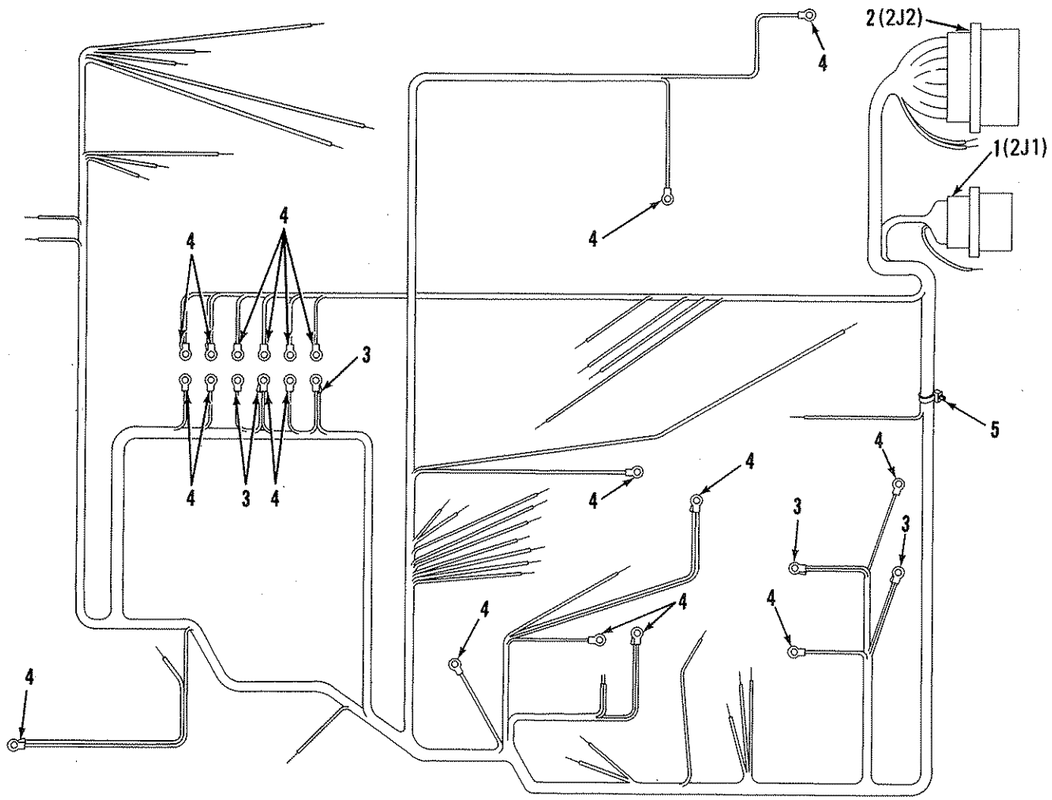

FIGURE 6-15 POWER SUPPLY HARNESS

FIGURE 6-15 POWER SUPPLY HARNESS

ITEM NO	SUNAIR PART NUMBER	DESCRIPTION
	6032240096	HARNESS, Power supply
1	0754240002	CONNECTOR, Power, 3 Pin Round Male
2	0754280004	CONNECTOR, Power, 15 Pin Round Female
3	0507060008	TERMINAL, Crimp 22-16 AWG
4	0516950002	TERMINAL, Crimp #10 Insul.
5	0600240002	TIE, Cable #4

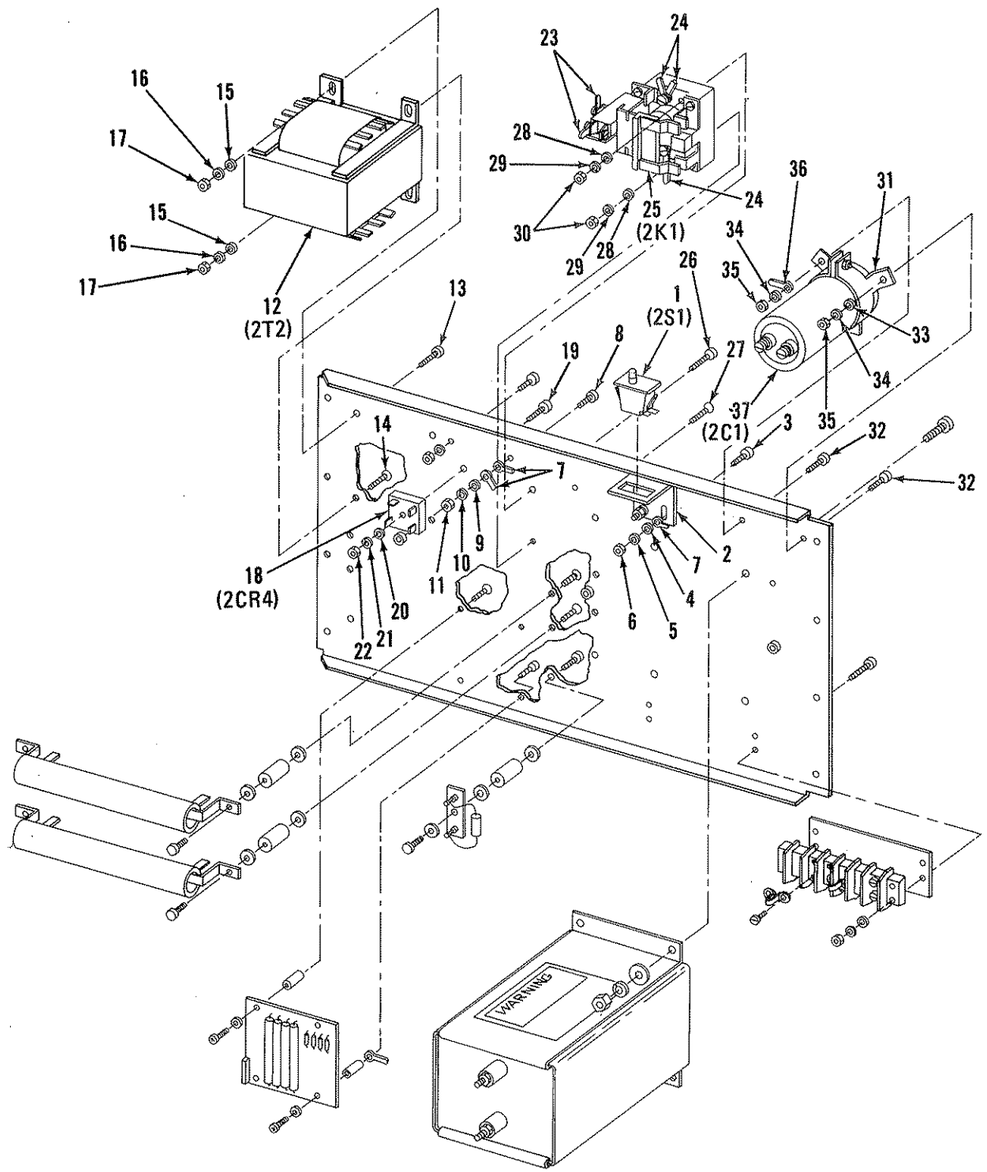

FIGURE 6-16 RIGHT HAND PANEL ASSEMBLY (SHEET 1 of 2)

FIGURE 6-16 RIGHT HAND PANEL ASSEMBLY SHEET 1

ITEM NO	SUNAIR PART NUMBER	DESCRIPTION
	60322300XX	PANEL ASSEMBLY, Right Hand
1	0346280001	SWITCH, Push Button, SPST
2	5025220301	BRACKET, Switch mounting
3	0500890625	SCREW, Machine PH 6-32 x 3/8 Lg. Blk.
4	0500200009	WASHER, Flat #6
5	0500040001	WASHER, Lock #6
6	0501910000	NUT, Hex 6-32 x 1/4 AF
7	0502050004	TERMINAL, Lug 1T No. 6
8	0500890625	SCREW, Machine PH 6-32 x 3/8 Lg. Blk.
9	0500200009	WASHER, Flat #6
10	0500040001	WASHER, Lock #6
11	0501910000	NUT, Hex 6-32 x 1/4 AF
12	1004800029	TRANSFORMER 115/230 VAC-24 VAC, 11 Amps
13	0500910821	SCREW, Machine PH 8-32 x 1/2 Lg. Blk.
14	0500730822	SCREW, Machine FH 8-32 x 1/2 Lg.Blk.
15	0500210004	WASHER, Flat #8 .375 OD
16	0500060002	WASHER, Lock #8
17	0501930001	NUT, Hex 8-32 x 11/32 AF
18	1002650020	DIODE, Bridge SCBA-2, 200 PIV, 25A
19	0500891222	SCREW, Machine PH 6-32 x 3/4 Lg. Blk.
20	0500200009	WASHER, Flat #6
21	0500040001	WASHER, Lock #6
22	0501900004	NUT, Hex 6-32 x 5/16 AF
23	0502420006	TERMINAL, Lug Plain No. 4
24	0502050004	TERMINAL, Lug IT No. 6
25	1003430007	RELAY, DPST, 24V, 30A, AUX. SPDT
26	0500911223	SCREW, Machine PH 8-32 x 3/4 Lg. Blk.
27	0500731225	SCREW, Machine FH 8-32 x 3/4 Lg. Blk.
28	0500210004	WASHER, Flat #8 .375.OD
29	0500060002	WASHER, Lock #8
30	0502690003	NUT, Hex 8-32 x 1/4 AF
31	0508590001	CLAMP, Capacitor, MTG
32	0500910821	SCREW, Machine PH 8-32 x 1/2 Lg. Blk.
33	0500210004	WASHER, Flat #8
34	0500060002	WASHER, Lock #8
35	0502690003	NUT, Hex 8-32 x 1/4 AF
36	0502450002	TERMINAL, Lug Plain No. 8
37	0281470006	CAPACITOR, Fixed 9500µh, 50V

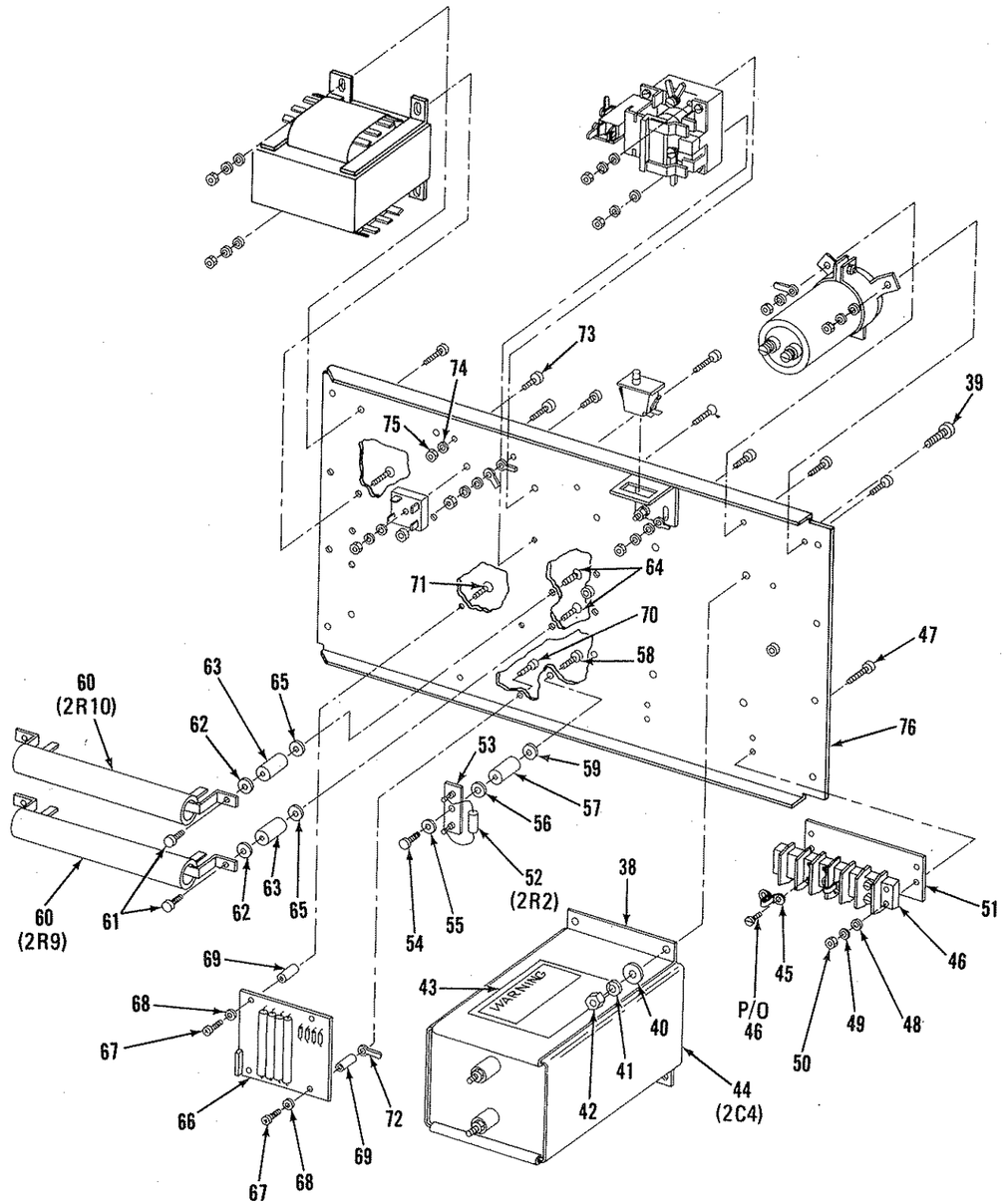

FIGURE 6-16 RIGHT HAND PANEL ASSEMBLY (SHEET 2 of 2)

FIGURE 6-16 RIGHT HAND PANEL ASSEMBLY SHEET 2

ITEM NO	SUNAIR PART NUMBER	DESCRIPTION
38	0525870008	BRACKET, Capacitor mounting
39	0525911022	SCREW, Machine PH 1/4-20 x 5/8 Lg. Blk.
40	0502600004	WASHER, Flat, 1/4 L .687 OD
41	0538370009	WASHER, Lock 1/4
42	0501950001	NUT, Hex 1/4-20 x 7/16 AF
43	1003030009	LABEL, Warning, High Voltage
44	0282030000	CAPACITOR, Fixed 10µf, 4000V
45	0508420003	BARRIER JUMPER, 142 Series
46	1002660017	BARRIER STRIP, 6 Pos., 8-32
47	0500911223	SCREW, Machine PH 8-32 x 3/4 Lg. Blk.
48	0500210004	WASHER, Flat #8
49	0500060002	WASHER, Lock #8
50	0502700009	NUT, Hex 8-32 x 5/16 AF
51	1002660025	MARKER STRIP, 6 pos., 1-6
52	0163600007	RESISTOR, Fixed 100, 10%, 2W
53	5025220408	TRANSIENT SUPPORT BOARD
54	0500910073	SCREW, Machine PH 8-32 x 7/16 Lg.
55	0500210004	WASHER, Flat #8
56	0500340005	WASHER, Flat #10
57	0715890000	INSULATOR, Standoff F-F 8-32 1.000L
58	0500910821	SCREW, Machine PH 8-32 x 1/2 Lg. Blk.
59	0500340005	WASHER, Flat #10
60	0197270000	RESISTOR, Fixed 50K, 5%, 100W
61	0500910073	SCREW, Machine PH 8-32 x 7/16 Lg.
62	0500340005	WASHER, Flat #10
63	0715890000	INSULATOR, Standoff F-F 8-32 1.000L
64	0500730822	SCREW, Machine FH 8-32, 1/2 Lg. Blk.
65	0500340005	WASHER, Flat #10
66	6032245004	HIGH VOLTAGE PROTECTION ASSEMBLY
67	0500850062	SCREW, Machine PH 4-40 x 3/8 Lg.
68	0502560002	WASHER, Flat #4 .219 OD
69	0542840006	INSULATOR, Standoff FF, 4-40 .750L
70	0500850623	SCREW, Machine PH 4-40 x 3/8 Lg. Blk.
71	0500660522	SCREW, Machine FH 4-40 x 5/16 Lg. Blk.
72	0502030003	TERMINAL, Lug IT No. 4
73	0500890064	SCREW, Machine PH 6-32 x 3/8 Lg.
74	0500040001	WASHER, Lock #6
75	0501910000	NUT, Hex 6-32 x 1/4 AF
76	60322011XX	PANEL, Right Hand

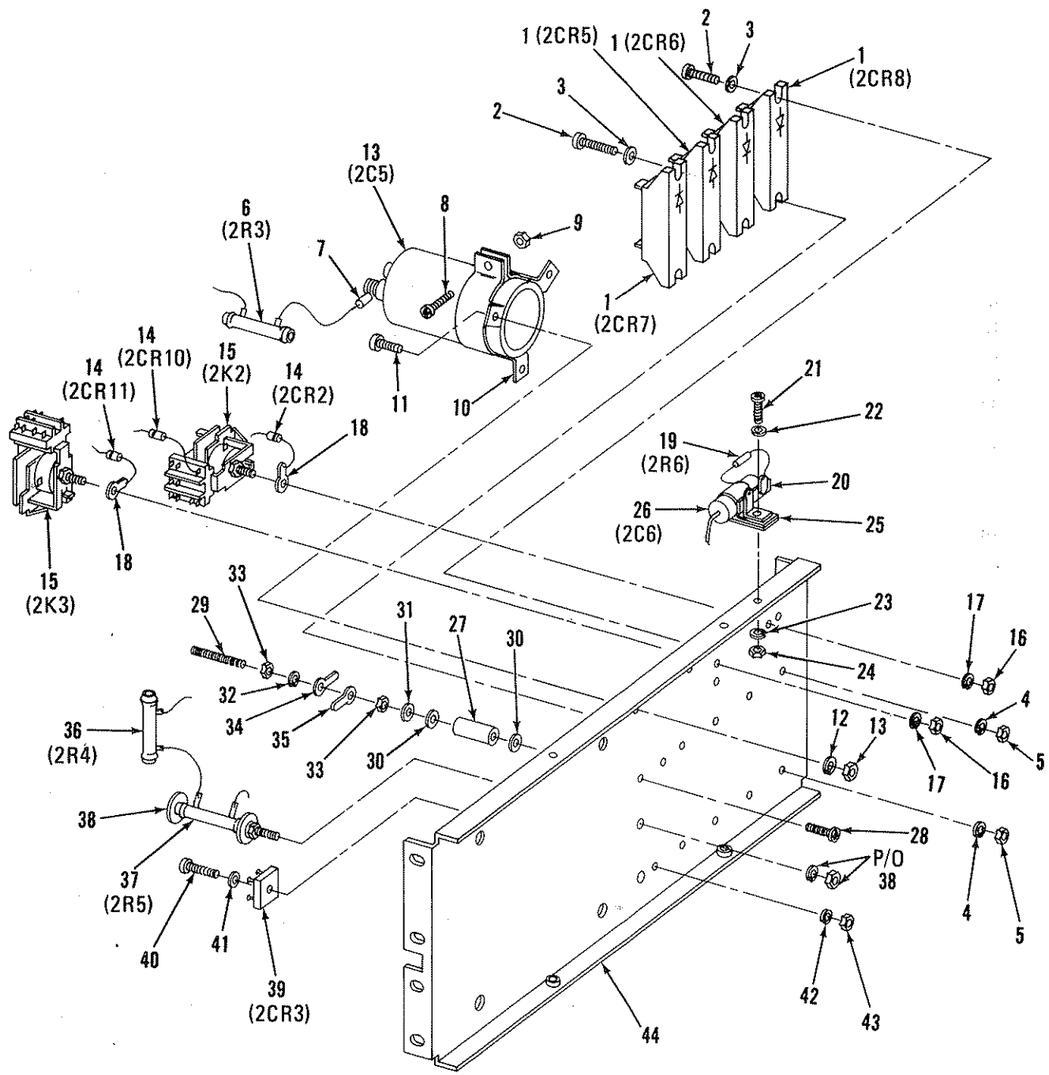

FIGURE 6-17 POWER SUPPLY PARTITION ASSEMBLY

FIGURE 6-17 POWER SUPPLY PARTITION ASSEMBLY

ITEM NO	SUNAIR PART NUMBER	DESCRIPTION
	6032220095	PARTITION ASSEMBLY, Power supply
1	0404390005	RECTIFIER, VC80, 8KV, 1A
2	0500890099	SCREW, Machine PH 6-32 x 9/16 Lg.
3	0500200009	WASHER, Flat #6
4	0500040001	WASHER, Lock #6
5	0501900004	NUT, Hex 6-32 x 5/16 AF
6	0197250009	RESISTOR, Fixed 2, 5% 12 W
7	0516950002	TERMINAL, Crimp #10 Insul.
8	0500910081	SCREW, Machine PH 8-32 x 1/2 Lg.
9	0501930001	NUT, Hex 8-32 x 11/32 AF
10	0508590001	CLAMP, Capacitor MTG.
11	0500910065	SCREW, Machine PH 8-32 x 3/8 Lg.
12	0500060002	WASHER, Lock #8
13	0501930001	NUT, Hex 8-32 x 11/32 AF
14	0405180004	DIODE, Rectifier, 1N4004, 400V, 1A
15	6032071901	RELAY, 3 PDT, 24VDC, Modified
16	0501900004	NUT, Hex. 6-32 x 5/16 AF
17	0500040001	WASHER, Lock #6
18	0502050004	TERMINAL, Lug IT #6
19	0185380000	RESISTOR, Fixed 10, 10%, 1/2 W
20	0848120001	TERMINAL, Board 2 Term, 1 Gnd.
21	0500890081	SCREW, Machine PH 6-32 x 1/2 Lg.
22	0500200009	WASHER, Flat #6
23	0500040001	WASHER, Lock #6
24	0501900004	NUT, Hex 6-32 x 5/16 AF
25	0502490004	CLAMP, Loop 5/8 ID, 3/8W
26	0280890001	CAPACITOR, 470µf, 50V, TAL
27	0840990006	STANDOFF, F-F, 6-32 1.000L
28	0500890072	SCREW, Machine PH 6-32 x 7/16 Lg.
29	0537960163	ROD, Threaded 6-32 x 1.0 Lg.
30	0539300004	WASHER, Flat #6
31	0500200009	WASHER, Flat #6
32	0500040001	WASHER, Lock #6
33	0501900004	NUT, Hex 6-32 x 5/16 AF
34	0502440007	TERMINAL, Lug Plain #6
35	0502050004	TERMINAL, Lug IT No. 6
36	0191920002	RESISTOR, Fixed 10, 5%, 12W
37	0197300006	RESISTOR, Fixed, 10K, 5%, 12W
38	6032073009	RESISTOR, MTG Kit
39	0405540001	DIODE, Bridge, VS847TT, 800V, 2A
40	0500890081	SCREW, Machine PH 6-32 x 1/2 Lg.
41	0500200009	WASHER, Flat #6
42	0500040001	WASHER, Lock #6
43	0501900004	NUT, Hex 6-32 x 5/16 AF
44	6032203000	BRACKET, Center

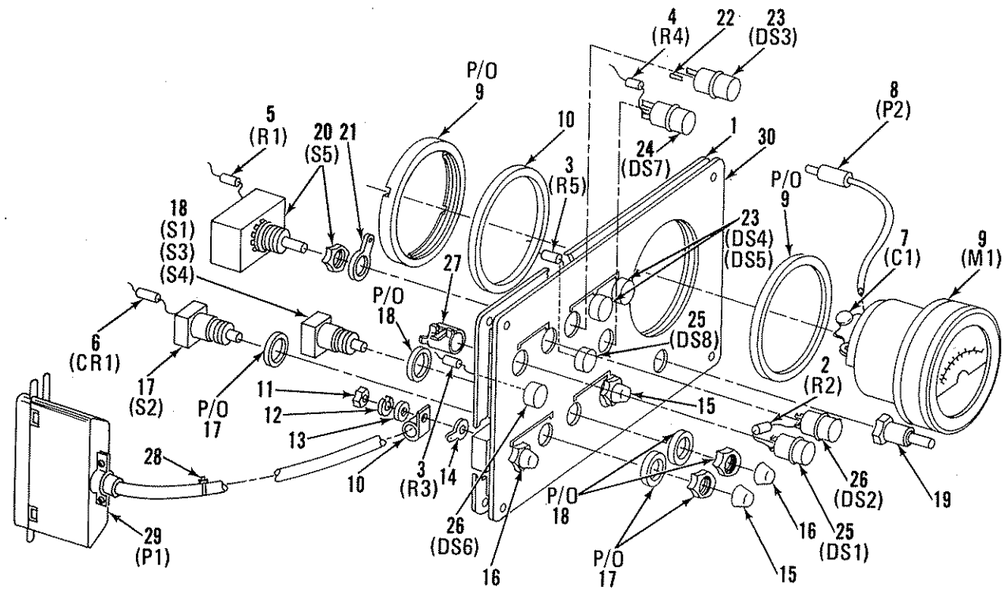

PREFIX ALL REFERENCE DESIGNATORS WITH 1A2

FIGURE 6-18 KW CONTROL UNIT

FIGURE 6-18 KW CONTROL UNIT

ITEM NO	SUNAIR PART NUMBER	DESCRIPTION
	60324000XX	KW CONTROL UNIT
1	5024043308	GASKET, Panel
2	0172850002	RESISTOR, Fixed 220, 10%, 1/2 W
3	0167980009	RESISTOR, Fixed 47, 10%, 1/2 W
4	0174790001	RESISTOR, Fixed 100, 10%, 1/2 W
5	0178570001	RESISTOR, Fixed 15, 10%, 1/2 W
6	0405180004	DIODE, Rectifier, 1N4004, 400V, 1A
7	0243550006	CAPACITOR, Fixed .01µf, 100V, Z5U, 20%
8	0753680009	CONNECTOR, Plug, Phone Tip, Red
9	5024042204	METER
10	0501840001	CLAMP, Loop 1/4 ID, 3/8W
11	0501910000	NUT, Hex 6-32 x 1/4 AF
12	0500040001	WASHER, Lock #6
13	0500200009	WASHER, Flat, #6
14	0502440007	TERMINAL, Lug, Plain No.6
15	1000880001	CAP, Switch Button, Red
16	1000880010	CAP, Switch Button, Black
17	1000870006	SWITCH, Push Button DPDT
18	1000870014	SWITCH, Push Button, SPDT
19	0531120007	BOOT, Toggle, switch 1/4-40
20	0334610001	SWITCH, Toggle, DPDT
21	0502470003	TERMINAL, Lug Plain .250 ID
22	0841520003	TERMINAL, Lamp Assembly
23	6032072207	LAMP ASSEMBLY, Amber 24-28V 40 MA
24	6032072304	LAMP ASSEMBLY, Red 24-28V 40 MA
25	6032072401	LAMP ASSEMBLY, White 24-28V 40 MA
26	6032072100	LAMP ASSEMBLY, Green 24-28V 40 MA
27	0841510008	CLIP, Lamp Assembly, MTG.
28	0600240002	TIE, Cable 4 Lg. 3/4 Dia.
29	0754070000	CONNECTOR, Plug Power, 36 Pin Rect. Male w/hood
30	60324001XX	PANEL, KW Control