NOTE:

All reference to CU-9150 in this Manual are to be read as CU-9100A

TM-8120000501

DIGITAL AUTOMATIC 1 KW ANTENNA COUPLER

CU-9150

OPERATION AND MAINTENANCE MANUAL

SUNAIR® 3101 SW Third Avenue, Ft. Lauderdale, FL 33315-3389

WARRANTY POLICY

GROUND AND MARINE PRODUCTS

Sunair Electronics warrants equipment manufactured by it to be free from defects in material or workmanship, under normal use for the lesser of one (1) year from the date of installation or 15 months from date of shipment by Sunair.

Sunair will repair or replace, at its option, any defective equipment or component of the equipment returned to it at its factory, transportation prepaid, within such warranty period. No reimbursement will be made for non-factory repair charges.

This warranty is void if equipment is modified or repaired without authorization, subject to misuse, abuse, accident, water damage or other neglect, or has its serial number defaced or removed.

THIS WARRANTY IS ESPECIALLY IN LIEU OF ANY AND ALL OTHER WARRANTIES EXPRESSED OR IMPLIED, INCLUDING ANY IMPLIED WARRANTY OF MERCHANTABILITY OR FITNESS FOR A PARTICULAR PURPOSE. The obligation and responsibility of Sunair shall be limited to that expressly provided herein and Sunair shall not be liable for consequential or other damage or expense whatsoever therefore or by any reason thereof.

Sunair reserves the right to make changes in design or additions to or improvements in its equipment without obligation to install such additions or improvements in equipment theretofore manufactured.

SUNAIR ELECTRONICS, INC.

SUNAIR®

CU-9150

DIGITAL AUTOMATIC 1 KW ANTENNA COUPLER

OPERATION AND MAINTENANCE MANUAL

SECOND EDITION, JANUARY 1, 1998
Page changes 1: 5/27/98
Page changes 2: 7/15/98
Page changes 3: 8/24/99

PRODUCT SERVICE:

In case of difficulty please contact the Sunair Product Service Department, between the hours of 8:00 AM and 5:00 PM EST (1300 to 2200 UTC) or write to:

Product Service Dept.
Sunair Electronics, Inc.
3101 SW Third Avenue
Ft. Lauderdale, FL 33315-3389
U.S.A.

Telephone: (954) 525-1505

Fax: (954) 765-1322

e-mail: techsupport@sunairhf.com

TRAINING:

Sunair offers training programs of varying lengths covering operation, service, and maintenance of all Sunair manufactured equipment. For details please contact the Product Service Department.

TABLE of CONTENTS

Section	Description	Page
I	**GENERAL INFORMATION**	
	1.1 Scope	1-1
	1.2 Description	1-1
	1.2.1 Assemblies	1-1
	1.2.1.1 Input Connector Assembly A1	1-1
	1.2.1.2 CPU Assembly A2	1-1
	1.2.1.3 RF Detector Assembly A3	1-1
	1.2.1.4 Input Capacitor Assembly A4	1-2
	1.2.1.5 Motherboard A5	1-2
	1.2.1.6 Coil and Capacitor Assembly A6	1-2
	1.3 Specifications	1-2
	1.3.1 General	1-2
	1.3.2 Environmental	1-3
	1.4 Equipment Supplied	1-3
	1.5 Equipment Required, Not Supplied	1-3
	1.6 Optional Equipment, Not Supplied	1-3
II	**INSTALLATION**	
	2.1 General	2-1
	2.2 Unpacking and Inspection	2-1
	2.3 Return of Equipment to Factory	2-1
	2.4 Power Requirements	2-2
	2.5 Installation Considerations and Mounting Information	2-2
	2.5.1 General Installation Procedures and Requirements	2-2
	2.5.2 Mounting Considerations	2-3
	2.5.3 Installation of Remote Control and RF Cables	2-3
	2.6 Antenna and Ground Systems	2-3
	2.6.1 General	2-3
	2.6.2 Random Length Non-Resonant Antennas	2-4

TABLE of CONTENTS (Cont...)

Section	Description	Page
	2.7 Long-Wire Adapter Kit (1A1A5) 8120909003	2-4
	2.8 TX Only Function	2-4
	2.9 Software Revision	2-5
	2.10 Checks After Installation	2-5
	2.11 Integration With Third Party Radio Systems	2-5
III	**OPERATION**	
	3.1 General	3-1
	3.2 Operating the CU-9150	3-1
	3.2.1 Operation with 9000 Series Exciters/Transceivers and LPA-9600	3-1
	3.2.2 1000 Watt Operational Checkout	3-1
IV	**THEORY OF OPERATION**	
	4.1 General	4-1
	4.2 Antenna Tuning Network	4-1
	4.3 Detector/Relay Pad Assembly A3	4-2
	4.3.1 General	4-2
	4.4 Chassis Assembly	4-2
	4.4.1 General	4-2
	4.4.2 Configuration and Operation	4-2
	4.5 CPU Assembly A2	4-2
	4.5.1 General	4-2
	4.5.2 RF Assembly 2A2	4-2
	4.5.3 Motherboard 2A1A1	4-3
	4.5.4 A/D Converter	4-3
	4.5.5 Relay Drivers	4-3
	4.5.6 Channel Change and Tune Command Detectors	4-3
	4.6 RF Detector Assembly	4-4
	4.6.1 General	4-4

TABLE of CONTENTS (Cont...)

Section		Description	Page
		4.6.2 Magnitude Discriminator	4-4
		4.6.3 Phase Discriminator	4-4
		4.6.4 Attenuator Pad, -3 dB	4-4
		4.6.5 50 Ohm Calibration Termination	4-4
		4.6.6 TX Only Function	4-5
	4.7	Input Capacitor Assembly	4-5
		4.7.1 General	4-5
		4.7.2 Configuration and Operation	4-5
	4.8	Mother Board Assembly A5	4-6
		4.8.1 General	4-6
		4.8.2 DC Power	4-6
		4.8.3 Series L and Shunt C Relays	4-6
		4.8.4 L Out Relays	4-6
	4.9	Interface Requirements for Third Party Equipment	4-6
		4.9.1 Signal Descriptions	4-6
V	**MAINTENANCE AND REPAIR**		
	5.0	General	5-1
	5.1	Preventative Maintenance	5-1
		5.1.1 Gasket Replacement	5-1
	5.2	Disassembly	5-1D
		5.2.1 Cover Removal	5-1D
		5.2.2 CPU Removal	5-1D
		5.2.3 RF Detector/Input Capacitor Removal	5-1D
		5.2.4 Chassis Removal	5-1D
	5.3	Indicators	5-2
	5.4	Test Equipment Required or Equivalent	5-2
	5.5	Alignment and Checks	5-2
	5.6	Troubleshooting	5-3
		5.6.1 Coupler Will Not Tune - No Relay Action - No Tuning Fault	5-3

TABLE of CONTENTS (Cont...)

Section	Description	Page
	5.6.2 Coupler Will Not Tune - No Relay Action - Tuning Fault Indicated	5-4
	5.6.3 Relays Operate But Tuning Fault Indicated	5-4
	5.6.4 Coupler Tunes But Memory Does Not Work	5-5
5.7	DIP Switch Settings	5-5
VI	**OPTIONS**	
6.1	Diagnostic Test Set	6-1
	6.1.1 General Information	6-1
	6.1.1.1 Scope of Option Section	6-1
	6.1.1.2 Purpose of Equipment	6-1
	6.1.1.3 Equipment Supplied	6-1
	6.1.2 Test Set Operation	6-2
	6.1.2.1 CPU Test Fixture Operation	6-2
	6.1.2.2 Display Board Operation	6-3
	6.1.2.3 Serial Breakout Board Operation	6-5
	6.1.2.4 BITE	6-6

LISTING of FIGURES (Cont...)

Section	Description	Page
II	**INSTALLATION**	
2.1	CU-9150 Control Cable P/N 8092500096.	2-6
2.2	Coupler Outline Dimensions.	2-7
2.3	LPA-9600 W/CU-9150, 35 Ft. Antenna.	2-8
2.4	LPA-9600 W/CU-9150, Non-Resonant Antenna.	2-9
2.5	KW Longwire Antenna Kit.	2-10
2.7.1	Long-Wire Adapter Kit (1A1A5) 81200909003 Installation. Configured for Long-Wire Operation.	2-11
2.7.2	Long-Wire Adapter Kit (1A1A5) 81200909003 Installation. Configured for Whip Antenna Operation.	2-12
2.7.3	Assembly/Disassembly of Antenna Output Lead (Long-Wire Adapter Kit Not Installed).	2-13
IV	**THEORY OF OPERATION**	
4.1	CU-9150 Block Diagram	4-9
4.9.1.1	Coupler Interface Timing	4-8
V	**MAINTENANCE AND REPAIR**	
5.1	Gasket Installation and Torque Sequence.	5-1B
5.1.1	CPU-9150 Assembly Tree.	5-6
5.1.2	Assembly Locations.	5-7
5.1.3	1A1 Chassis Component Locations.	5-8
5.1.4	Non-Chassis Component Locations.	5-9
5.2.4.1	Chassis Removal	5-11
5.5.1	1A1A4A1 RF Detector Alignment Adjustment Locations.	5-12
5.8.1	Final Assembly Tested CU-9150, Chassis Assembly 1A1 and Long Wire Adapter Kit 1A1A5, page 1 of 3.	5-13
5.8.1	Final Assembly Tested CU-9150, Chassis Assembly 1A1 and Long Wire Adapter Kit 1A1A5, page 2 of 3.	5-14
5.8.1	Final Assembly Tested CU-9150, Chassis Assembly 1A1 and Long Wire Adapter Kit 1A1A5, page 3 of 3.	5-15
5.8.2	PC Assembly, CU-9150 Motherboard, 1A1A1, page 1 of 4.	5-16
5.8.2	PC Assembly, CU-9150 Motherboard, 1A1A1, page 2 of 4.	5-17
5.8.2	PC Assembly, CU-9150 Motherboard, 1A1A1, page 3 of 4.	5-18

LISTING of FIGURES (Cont...)

Section	Description	Page
5.8.2	PC Assembly, CU-9150 Motherboard, 1A1A1, page 4 of 4.	5-19
5.8.3	PC Assembly, Input Connector, 1A1A2, page 1 of 2.	5-20
5.8.3	PC Assembly, Input Connector, 1A1A2, page 2 of 2.	5-21
5.8.4	PC Assembly, CPU, 1A1A3, page 1 of 9.	5-22
5.8.4	PC Assembly, CPU, 1A1A3, page 2 of 9.	5-23
5.8.4	PC Assembly, CPU, 1A1A3, page 3 of 9.	5-24
5.8.4	PC Assembly, CPU, 1A1A3, page 4 of 9.	5-25
5.8.4	PC Assembly, CPU, 1A1A3, page 5 of 9.	5-26
5.8.4	PC Assembly, CPU, 1A1A3, page 6 of 9.	5-27
5.8.4	PC Assembly, CPU, 1A1A3, page 7 of 9.	5-28
5.8.4	PC Assembly, CPU, 1A1A3, page 8 of 9.	5-29
5.8.4	PC Assembly, CPU, 1A1A3, page 9 of 9.	5-30
5.8.5	PC Assembly, RF Detector, 1A1A4A1, page 1 of 2.	5-31
5.8.5	PC Assembly, RF Detector, 1A1A4A1, page 2 of 2.	5-32
5.8.6	PC Assembly, Input Capacitor, 1A1A4A2, page 1 of 2.	5-33
5.8.6	PC Assembly, Input Capacitor, 1A1A4A2, page 2 of 2.	5-34

VI DIAGNOSTIC TEST SET

6.1.3.1	PC Assembly, Test Fixture, CU-9150 CPU, page 1 of 8.	6-9
6.1.3.1	PC Assembly, Test Fixture, CU-9150 CPU, page 2 of 8.	6-10
6.1.3.1	PC Assembly, Test Fixture, CU-9150 CPU, page 3 of 8.	6-11
6.1.3.1	PC Assembly, Test Fixture, CU-9150 CPU, page 4 of 8.	6-12
6.1.3.1	PC Assembly, Test Fixture, CU-9150 CPU, page 5 of 8.	6-13
6.1.3.1	PC Assembly, Test Fixture, CU-9150 CPU, page 6 of 8.	6-14
6.1.3.1	PC Assembly, Test Fixture, CU-9150 CPU, page 7 of 8.	6-15
6.1.3.1	PC Assembly, Test Fixture, CU-9150 CPU, page 8 of 8.	6-16
6.1.3.2	PC Assembly, Serial Breakout Board, page 1 of 2.	6-17
6.1.3.2	PC Assembly, Serial Breakout Board, page 2 of 2.	6-18
6.1.3.3	PC Assembly, Display Board, page 1 of 9.	6-19
6.1.3.3	PC Assembly, Display Board, page 2 of 9.	6-20
6.1.3.3	PC Assembly, Display Board, page 3 of 9.	6-21
6.1.3.3	PC Assembly, Display Board, page 4 of 9.	6-22
6.1.3.3	PC Assembly, Display Board, page 5 of 9.	6-23
6.1.3.3	PC Assembly, Display Board, page 6 of 9.	6-24
6.1.3.3	PC Assembly, Display Board, page 7 of 9.	6-25
6.1.3.3	PC Assembly, Display Board, page 8 of 9.	6-26
6.1.3.3	PC Assembly, Display Board, page 9 of 9.	6-27

TABLE of ABBREVIATIONS

ADDR Address
AGC Automatic Gain Control
ALC Automatic Level Control
AM Amplitude Modulation
AME Amplitude Modulation Equivalent
AMP/AMPL Amplifier
ARQ Automatic Request
AUD Audio
AUTO Automatic
AUX Auxiliary
BAUD A variable unit of data transmission speed (bits per second)
BELL U.S. Telephone standards
BFO Beat Frequency Oscillator
BITE Built In Test Equipment
BRD Board
CH /CHAN /CHL/CHN Channel
CLR Clear
CMOS Complementary Metal Oxide Semiconductor
CPLR Coupler
CPU Computer
CW Carrier Wave
dB Decibel
dBm Decibels referred to 1 milliwatt across 600 ohms
DSBSC Double Sideband Suppressed Carrier
DSP Display
DUART Dual Asynchronous Receive/Transmit
EEPROM Electrically Erasable and Programmable Read Only Memory
EPROM Electrically Programmable Read Only Memory
EMI Electromagnetic Radiation Interference
ENTR Enter
FAX Facsimile
FEC Forward Error Correction
FREQ Frequency
FSK Frequency Shift Keying
FWD Forward
GRP Group
HF High Frequency
Hz Hertz
IC Integrated Circuit
IF Intermediate Frequency
I/O Input/Output
IONCAP Ionospheric Communications Analysis and Prediction
kHz Kilohertz
kW Kilowatt
ISB Independent Sideband
LCD Liquid Crystal Display
LCL Local
LED Light Emitting Diode
LK Link
LO Local Oscillator
LP/LPX Lincompex
LRU Lowest Repairable Unit
LSB Lower Sideband
LT Light
LVL Level
MAN Manual
M CH Manual Channel
MED Medium
MHz Megahertz
MIC Microphone
MIL-STD Military Standard
MNL Manual
ms Millisecond
MTTR Mean Time To Repair
MTR Meter
NAR Narrow
O.D. Olive Drab
PA Power Amplifier
PC Printed Circuit
PEP Peak Envelope Power
PLL Phase-Locked Loop
P/N Part Number
PNL Panel
POSTSL Post-Selector
PRESEL Pre-Selector
PTT Push-To-Talk
PWR Power
RCV/RX Receive
REFL Reflected
REV Revision
RF Radio Frequency
RFI Radio Frequency Interference
RFL Reflected
RMT Remote
RS232 Computer control, hardwired up to 50 feet maximum
RS422 Computer control, hardwired up to 4000 feet maximum
RS485 Computer control, hardwired for multiple users
RTTY Radio Teletype
SEL Select
SLO Slow
S MTR Signal Strength Meter
SPKR Speaker
SPLX Simplex
SRAM Static Random Access Memory
SSB Single Sideband
TCXO Temperature Controlled Crystal Oscillator
TGC Transmit Gain Control
THD Total Harmonic Distortion
TTL Transistor Transistor Logic
TX/XMT Transmit
USB Upper Sideband
UTC Universal Time
VCO Voltage Controlled Oscillator
VHF Very High Frequency
VRMS Volts Root Mean Square
VSWR Voltage Standing Wave Ratio
W Watt
WPM Words Per Minute
* Asterisk indicates function selected

THIS PAGE INTENTIONALLY LEFT BLANK.

SECTION I

GENERAL INFORMATION

1.1 SCOPE

This manual contains information necessary to install, operate, maintain and repair the CU-9150 1 KW Automatic Digital Antenna Coupler.

1.2 DESCRIPTION

The CU-9150 is a 1000 watt high quality remotely controlled antenna coupler, capable of providing efficient matching of antennas 23 feet and longer to a 50 ohm transmission line, over the frequency range of 1.6 to 30MHz. In addition, the coupler may be used as a 'line flattener' to correct the VSWR of resonant antennas. The unit is designed as a companion to the Sunair LPA-9600 1 kW or LPA-9500 500 Watt Linear Power Amplifiers.

The CU-9150 is designed to operate at separations of up to 250 feet from the Exciter/Transceiver. The coupler control is located on the front panels of Sunair 9000 Series Exciters/Transceivers. Manual tuning cycles are initiated by depressing the 'CPLR TUNE' pushbutton on 9000 Series front panel. Tuning status 'CPLR TUNE' pushbutton and a meter for indicating forward and reflected power are located on the 9000 Series front panel. During a tuning cycle, the linear power amplifier is disabled and tune power (35-45 Watts) is supplied by the Exciter/ Transceiver. The operating power and commands to the coupler are also supplied by the Exciter/Transceiver alone. The coupler may be used directly with a 125 watt Exciter/Transceiver if low power operation is desired or the linear amplifier is off-line.

The CU-9150 case is sturdy, fully gasketed and meets all environmental requirements for exposed locations.

1.2.1 ASSEMBLIES

1.2.1.1 INPUT CONNECTOR ASSEMBLY 1A1A2

The Input Connector Assembly 1A1A2 provides the required mounting surface for the various electrical and mechanical components. It serves as interconnect for signals to and from the CU-9150, the Exciter/ Transceiver and the LPA-9600 kilowatt linear power amplifier.

1.2.1.2 CPU ASSEMBLY 1A1A3

The CPU Assembly 1A1A3 contains the microprocessor responsible for the operations and functions of the CU-9150.

1.2.1.3 RF DETECTOR ASSEMBLY 1A1A4A1

The RF Detector Assembly contains the magnitude, phase, reflected power detectors and a 50 ohm calibration source.

1.2.1.4 INPUT CAPACITOR ASSEMBLY 1A1A4A2

The Input Capacitor Assembly contains the input capacitance binary variable network element.

1.2.1.5 MOTHERBOARD 1A1A1

The Motherboard 1A1A1 interconnects the CPU Assembly, RF Detector, Input Capacitor and Network Relays.

1.2.1.6 CHASSIS ASSEMBLY 1A1

The Chassis Assembly contains 3 binary variable reactive network elements. These are the series inductance (Lseries), output capacitance (Cout), and output inductance (Lout).

1.3 SPECIFICATIONS

1.3.1 GENERAL

FREQUENCY RANGE: 1.6 to 30 MHz

TUNING CAPABILITIES: 35 foot Whip
50 to 150 foot Long Wires
Note: Long Wire Adapter required
23 foot Whip, 3 to 30 MHz.

RF INPUT POWER: 1.6 to 2.0 MHz 500 W average, 1 kW PEP
2.0 to 30 MHz 1 kW average, 1 kW PEP

INPUT IMPEDANCE: 50 ohms

DUTY CYCLE: Continuous

TUNING TIME: 1 second typical; 25 ms from memory. Channel Memory, 128 channels

TUNE POWER REQUIRED: 25 W RF delivered

TUNE ACCURACY: 1.5:1 VSWR or better (99.5% of all operating frequencies)

REMOTE CAPABILITY: Up to 250 ft. from Exciter/Transceiver

POWER INPUT: 28 VDC supplied from Exciter/Transceiver

CIRCUIT PROTECTION: (A) RF Input Spark Gap
(B) Control Line Lightning Impulse

WEIGHT: 45 lbs (20.4 kgs)

SIZE: (CM) 73.15L X 45.47W X 24.38H
(Inches) 28.8L X 17.9W X 9.6H

MTTR: 15 minutes

MTBF: 12,000 hours

1.3.2 ENVIRONMENTAL

TEMPERATURE: Operating: -50°C to +65°C
Storage: -55°C to +85°C

HUMIDITY: MIL-STD-810C, Method 507.1 Proc II

SHOCK AND VIBRATION: MIL-STD-810C, Method 516.2 and 514.2

ENCLOSURE: MIL-STD-810C, Method 510.1, waterproof

1.4 EQUIPMENT SUPPLIED

	SUNAIR PART NUMBER
CU-9150 Automatic Digital Antenna Coupler	8120000056 Gray 8120000099 Olive Drab
Button Up	8120001052 Gray
Connector Kit	8092000298
Consisting of:	
Bushing, Telescoping, .561 D	0700550054
Bushing, Telescoping, .621 D	0700550062
Bushing, Telescoping, .751 D	0700550071
Connector, Power, 37 Pin Round	0747640009
Connector, RF, N UG-21 B/U	0754140008
Operation and Maintenance Manual	8120000501

1.5 EQUIPMENT REQUIRED - NOT SUPPLIED

	SUNAIR PART NUMBER
Control Cable Assembly	8092500096
Order by length desired. Contains:	
Connector Kit,	8092000298
Cable,	0588680001
LPA-9600/LPA-9500 mating connector and hardware.	
Coax Cable Assembly	8104906097
Order by length desired. Contains:	
Coax Cable RG-213	1010770021
Connector, RF, N UG-21 B/U 2 ea.	0754140008

1.6 OPTIONAL EQUIPMENT - NOT SUPPLIED

	SUNAIR PART NUMBER
Linear Amplifiers/Exciter/Transceiver	Consult Sunair Marketing Department.
TS-9150 Diagnostic Test Set	8120907591
Depot Spares Kit	8120900090

	SUNAIR PART NUMBER
Field Module Kit	8120905792
35 Foot Fiberglass Antenna	0715850008
Feed-Thru Antenna Mount, 1 kW	1004890001
Base Antenna w/Flange	0715780000
KW Longwire Antenna Kit	1003090010
Control Cable Assembly Used to connect coupler directly to exciter/transceiver	8076004195
Long-Wire Adapter Kit	8120909003

SECTION II

INSTALLATION

2.1 GENERAL

Section II contains all necessary instructions for the unpacking, inspection, and if necessary, reshipping of damaged equipment or parts. In addition, further information regarding location and mounting considerations, power requirements, antenna and ground system hook-ups and installation test is also provided.

2.2 UNPACKING AND INSPECTION

As soon as you have received your unit(s), unpack and inspect all components and accessories. Check the packing list to be sure you have received all items ordered and that all items necessary for operation have been ordered.

NOTE: Be sure to retain the carton and its associated packing materials should it be necessary to reship damaged equipment.

Do not accept a shipment when there are visible signs of damage to the cartons until a complete inspection is made. If there is a shortage of items or any evidence of damage, insist on a notation to that effect on the shipping papers before signing the receipt from the carrier. If concealed damage is discovered after the shipment has been accepted, notify the carrier immediately in writing and await his inspection before making any disposition of the shipment. A full report of the damage should also be forwarded to Sunair's Product Services Department. Include the following:

a) Order Number
b) Model and Serial Number
c) Name of Transportation Agency
d) Applicable dates.

When Sunair receives this information, arrangements will be made for repair or replacement.

2.3 RETURN OF EQUIPMENT TO FACTORY

The shipping container for the CU-9150 has been carefully designed to protect the equipment during shipment. The container and its associated packing materials should be used to reship the unit. When necessary to return equipment to Sunair for warranty or non-warranty repair, an authorization number is required. This number can be obtained from our Product Services Department, Telephone: (954)-525-1505, FAX: (954)-765-1322, or e-mail: techsupport@sunairhf.com.

If the original shipping carton is not available, be sure to carefully pack each unit separately, using suitable cushioning material where necessary. Very special attention should be given to providing enough packing material around connectors and other protrusions from the coupler. Rigid cardboard should be placed at the corners of the equipment to protect against denting.

When returning subassemblies or components for repair or replacement, be sure to pack each item separately, using suitable cushioning material.

Shipment to be made prepaid consigned to:

Sunair Electronics, Inc.
Product Services Department
3101 SW Third Avenue
Ft. Lauderdale, Florida 33315-3389
U.S.A.

Plainly mark with indelible ink all mailing documents as follows:

U.S. Goods Returned For Repair
Value For Customs - $100.00

Mark ALL SIDES of the package:

FRAGILE - ELECTRONIC EQUIPMENT!

NOTE: Before shipping, carefully inspect the package to be sure it is marked properly and is securely wrapped.

2.4 POWER REQUIREMENTS

All power necessary to operate the CU-9150 1 KW Automatic Digital Coupler is supplied from a companion Exciter/Transceiver via the LPA-9600/LPA-9500 control cable. See Figure 2.1 for control cable connections.

2.5 INSTALLATION CONSIDERATIONS AND MOUNTING INFORMATION

The satisfactory operation of the equipment will depend upon the care and thoroughness taken during the installation.

IMPORTANT INSTRUCTIONS

2.5.1 GENERAL INSTALLATION PROCEDURES AND REQUIREMENTS

1. Carefully plan radio/amplifier/coupler/antenna locations, observing the following requirements before starting installation.

2. Provide best possible RF ground for all equipment. Use flat copper strap 1" wide or #6 (or larger) wire and make connections to the ground terminal of all system components. Leads to ground system should be as short as possible.

After the system grounds have been installed, connect the station ground system to the antenna coupler ground terminal. Bear in mind that the antenna ground lead is actually part of the antenna itself, and therefore will have a marked effect on the antenna input impedance. If a 35 foot vertical antenna is to be used, at least 12 separate 35 foot radials connected to a common ground stake, are recommended.

3. Provide the maximum separation between coupler/antenna and the radio with its associated wiring. 100 feet is the recommended minimum distance and up to 250 feet separation may be used.

4. The antenna lead from the antenna coupler RF output insulator must be insulated for at least 15 kV potential. As an alternative, copper tubing with an outside diameter of at least 1/4" may be used, provided that it is routed to the antenna terminal so that it is spaced at least six inches from any metal objects in its vicinity. It is important to keep the length of this lead to an absolute minimum since it forms a part of the radiating portion of the antenna. Three (3) feet would be the maximum distance if antenna efficiency is not to be compromised.

5. Linear amplifiers with low level modulation such as used in Sunair exciters/transceivers will sometimes oscillate if the high RF power level output is radiated or conducted into the low level stages. Evidence of this situation is erratic or excessive power output. This is caused by too close proximity of the coupler output and antenna to the transmitter and/or inadequate RF grounds. Carefully following the above procedures will prevent this from occurring.

2.5.2 MOUNTING CONSIDERATIONS

See Figure 2.2 for Coupler outline dimensions.

The mounting position for the CU-9150 is dependent on the available space for mounting. Four mounting feet with 3/8" wide slots are provided on the coupler. If it is necessary to mount the coupler on a wooden pole, simple angle-iron adapter brackets may easily be fabricated. Since the total weight of the unit is only 45 pounds, two wooden 4 x 4s set in cement would provide dependable support.

2.5.3 INSTALLATION OF REMOTE CONTROL AND RF CABLES

It is recommended that the remote control cable be procured from Sunair. However, if necessary, the cable may be made from individual No. 20 AWG stranded wire with an overall braided shield and PVC jacket. Interconnection cable details are given in Figure 2.1.

2.6 ANTENNAS AND GROUND SYSTEMS

2.6.1 GENERAL

Sunair Exciters/Transceivers are designed to operate into a 50 Ohm resistive antenna system with a maximum voltage standing wave ratio (VSWR) of 2:1. When used with the CU-9150 1 KW Automatic Digital Antenna Coupler alone or with the LPA-9600 Linear Amplifier, the system will match antennas 35 feet and longer. The CU-9150 is placed close to the antenna (within 3 feet or less) and controlled from the front panel of the exciter/transceiver. This optimizes both operator convenience and electrical performance. As there are numerous types of antennas, a complete discussion is beyond the scope of this manual; however, some general DOs and DON'Ts of antenna installation are listed below:

a) The antenna should be clear of all large objects such as trees and buildings.

b) When using whip antennas, the ground system actually forms part of the radiating system. Where space permits (such as in a base station installation) a good ground plane or radial system should be installed at the base of the antenna. (See Figure 2.3)

NOTE: An inadequate ground system is most often responsible for disappointing performance when using a whip antenna.

2.6 ANTENNAS AND GROUND SYSTEMS

2.6.2 RANDOM LENGTH NON-RESONANT ANTENNAS

Refer to Figures 2.3, 2.4, and/or 2.5 as needed.

Whips and longwires are popular non-resonant antennas. The whip antenna is often used in mobile, marine, portable or semi-portable installations because it is rugged and self-supporting. The antenna impedance is strongly dependent on the operating frequency, and an antenna coupler, therefore, must be used to match the antenna to the transceiver. Thirty-five foot whip antennas offer a good compromise between practical height and good electrical performance at low frequencies. The whip's performance is greatly influenced by its ground system. For temporary base station installations, a minimum of four six-foot long ground rods should be driven into the ground, symmetrically placed around the antenna base. The rods should be bonded together with heavy strap and then connected to the antenna coupler ground by another short, heavy strap. If the antenna is mounted on the roof of a building where a short ground lead to coupler cannot be obtained, a minimum of four symmetrically placed ground radials should be installed at the base of the antenna, bonded together, and connected to the antenna coupler ground post. The radials should be made of number 12 gauge wire or larger and should be at least 1/4 wave long at the lowest operating frequency. (Radial length in feet = 246/frequency in MHz.) The whip's radiation pattern is omni-directional in the azimuthal plane.

The longwire antenna, illustrated in Figure 2.5, is a popular base station antenna where a wide range of operating frequencies are used. The antenna impedance varies greatly with frequency and, therefore, must be matched to the transmitter with the antenna coupler. The CU-9150 will efficiently match longwire antennas up to 150 foot in length. The radiation pattern of the longwire antenna is also a strong function of operating frequency. The two most popular longwire antennas, (75 and 150 foot) available from Sunair, exhibit excellent low frequency radiation efficiency.

2.7 LONG-WIRE ADAPTER KIT (1A1A5) 8120909003

The Long-Wire Adapter Kit is required for wire antennas between 50 and 150 feet in length. See Figure 2.7.1 for installation details.

Operation using a 23 to 35 foot whip antenna is still possible after installation of the long-wire adapter kit. This is accomplished by changing the point at which the wire from K19 on the chassis (1A1K19) is connected to the long-wire adapter kit. See Figure 2.7.2 for details.

A "WHIP / LONG-WIRE" identification plate is included with the long-wire adapter kit. It should be secured to the top cover of the coupler by one of the cover hold-down screws. It is meant to indicate whether the long-wire adapter kit is configured for whip or long-wire operation.

2.8 TX ONLY FUNCTION

If the coupler is being installed in a system with separate transmit and receive antennas and where two or more transmitters are using collocated antennas, the TX ONLY function should be enabled. When this function is enabled, the coupler opens the RF path between the tuning network and the radio system when the radio system is in receive mode. Therefore, high RF voltages induced by adjacent transmitters are confined to the coupler.

The TX ONLY function is enabled by soldering a jumper wire between E4 and E4 of the 1A1A4A1 RF Detector Board.

2.9 SOFTWARE REVISION

In order for the CU-9150 to function properly, the software revision in the companion transceiver or exciter and linear amplifier must be equal to or later than the following:

Equipment	Software Revision
RT-9000 or RT-9000A	D4
T-9400	B1
LPA-9500	B1
LPA-9600	B1

2.10 CHECKS AFTER INSTALLATION

Follow steps outlined in Section 3.2 for your particular system configuration.

WARNING HIGH VOLTAGE

The radio operator and service technician should exercise caution not to contact the ANTENNA INSULATOR E2 Output while transmitting.

2.11 INTEGRATION WITH THIRD PARTY RADIO SYSTEMS

See Section 4.9 for interface information required to integrate the CU-9150 with Third Party Radio Systems.

P22061

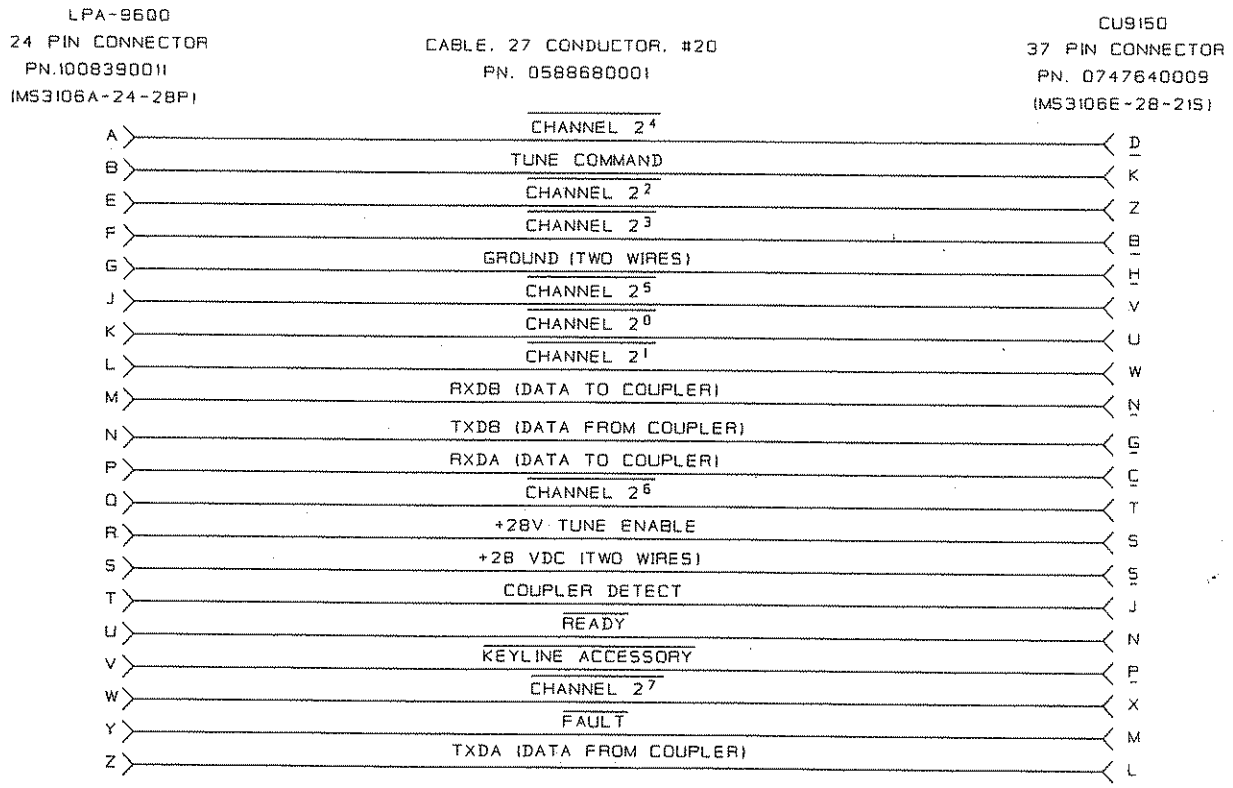

NOTE:
UNDERSCORED CHARACTERS REPRESENT
LOWER CASE CHARACTERS.

Figure 2.1 CU-9150 Control Cable P/N 8092500096.

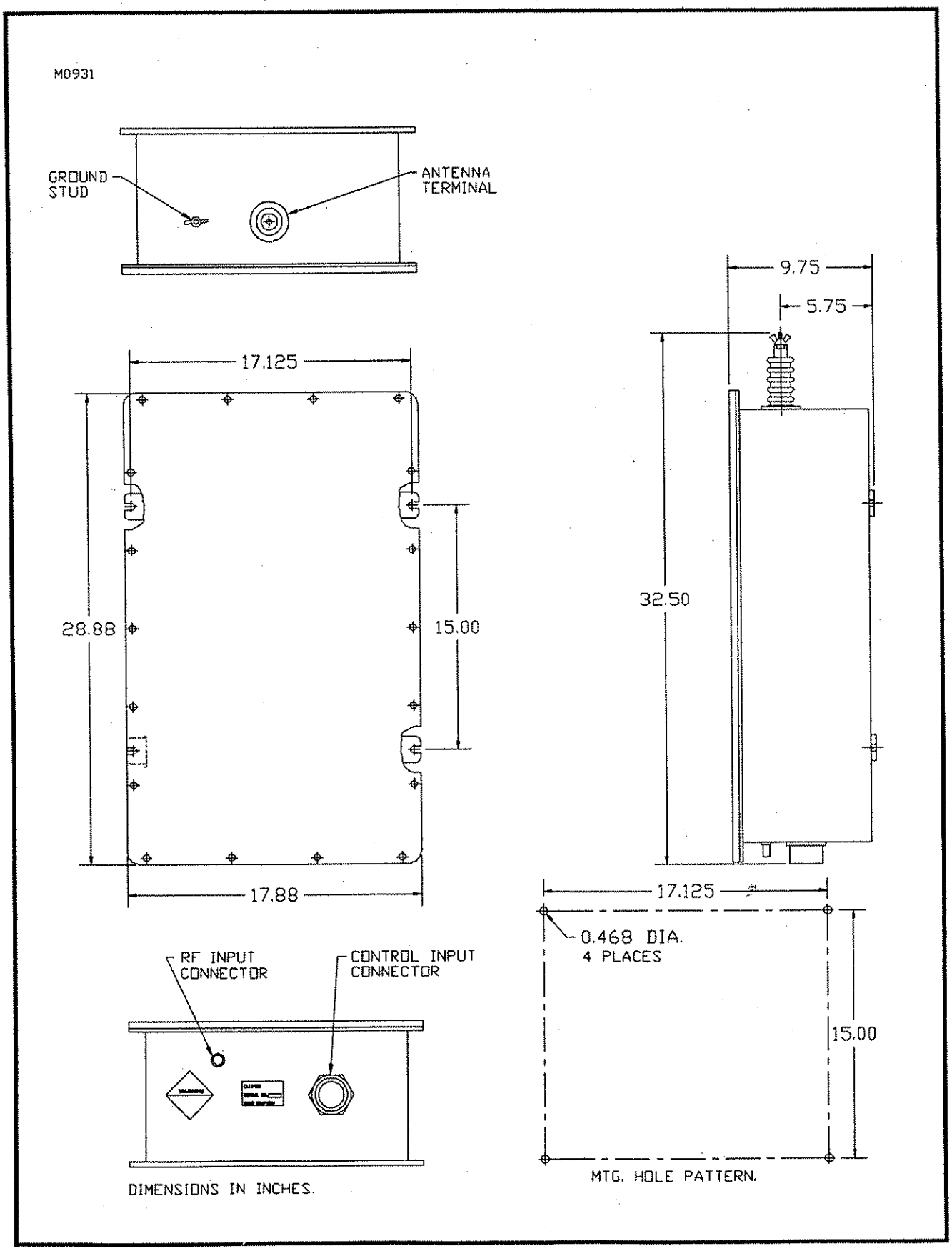

Figure 2.2 Coupler Outline Dimensions.

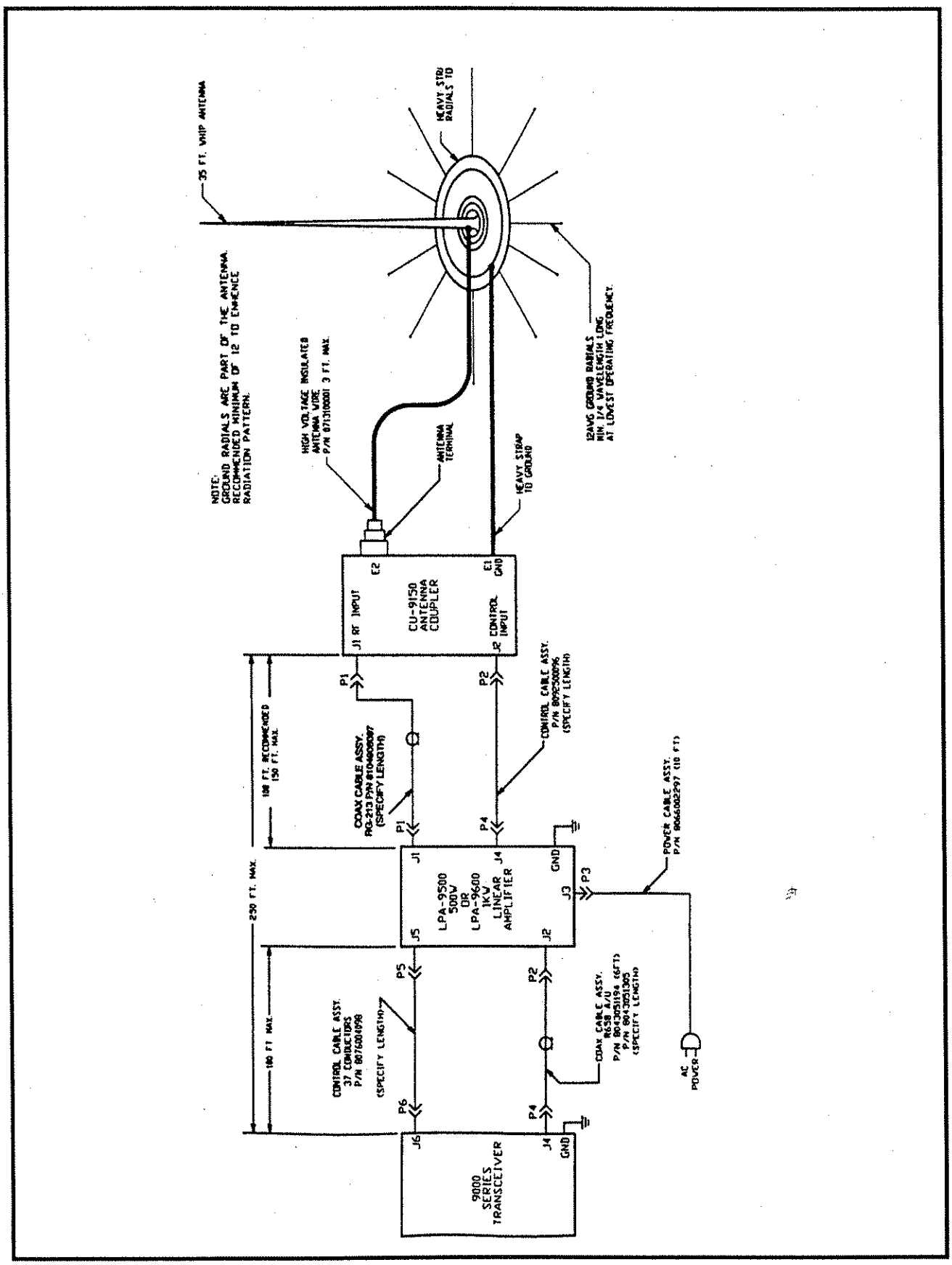

Figure 2.3 LPA-9600 W/CU-9150, 35 Ft. Antenna.

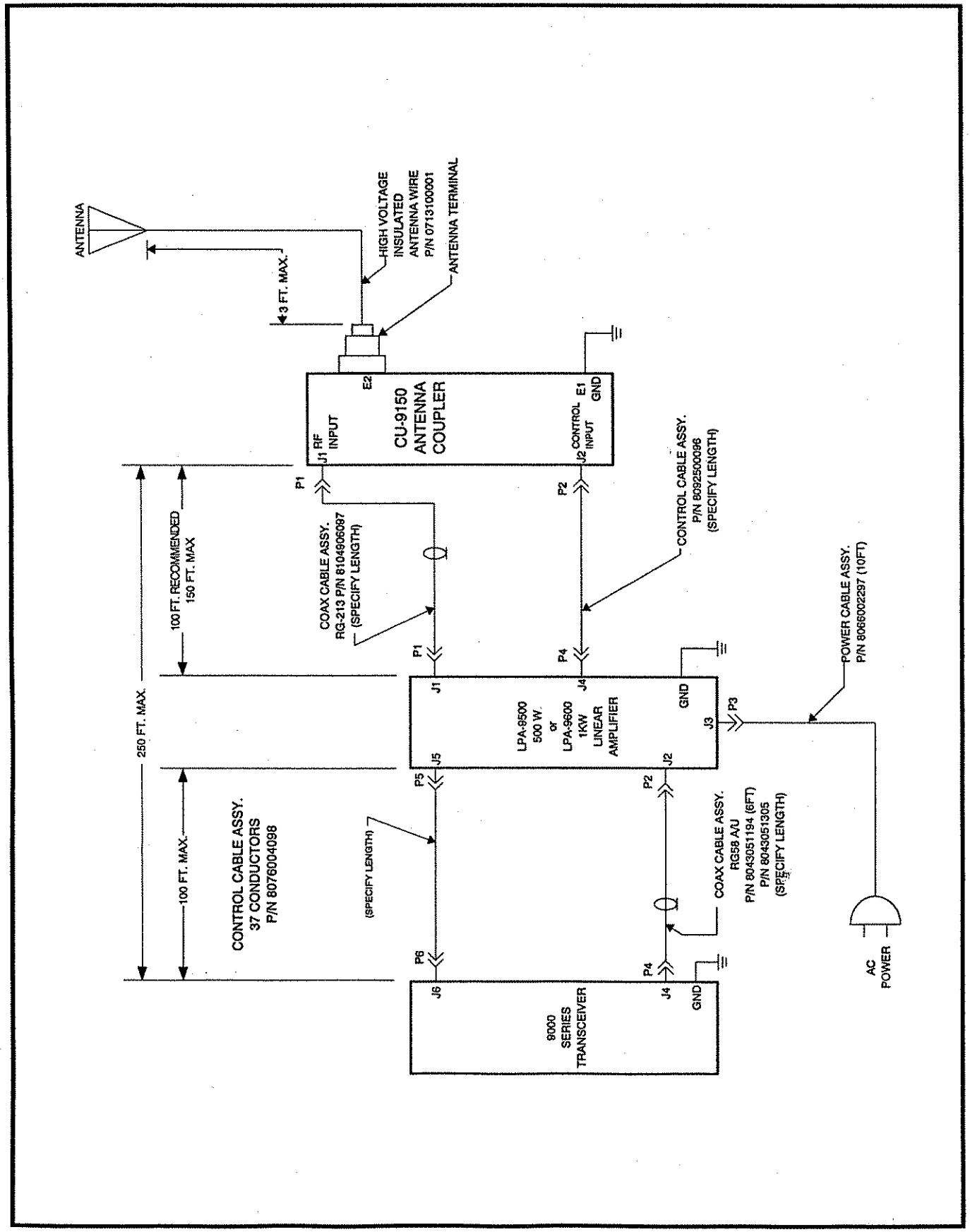

Figure 2.4 LPA-9600 W/CU-9150, Non-Resonant Antenna.

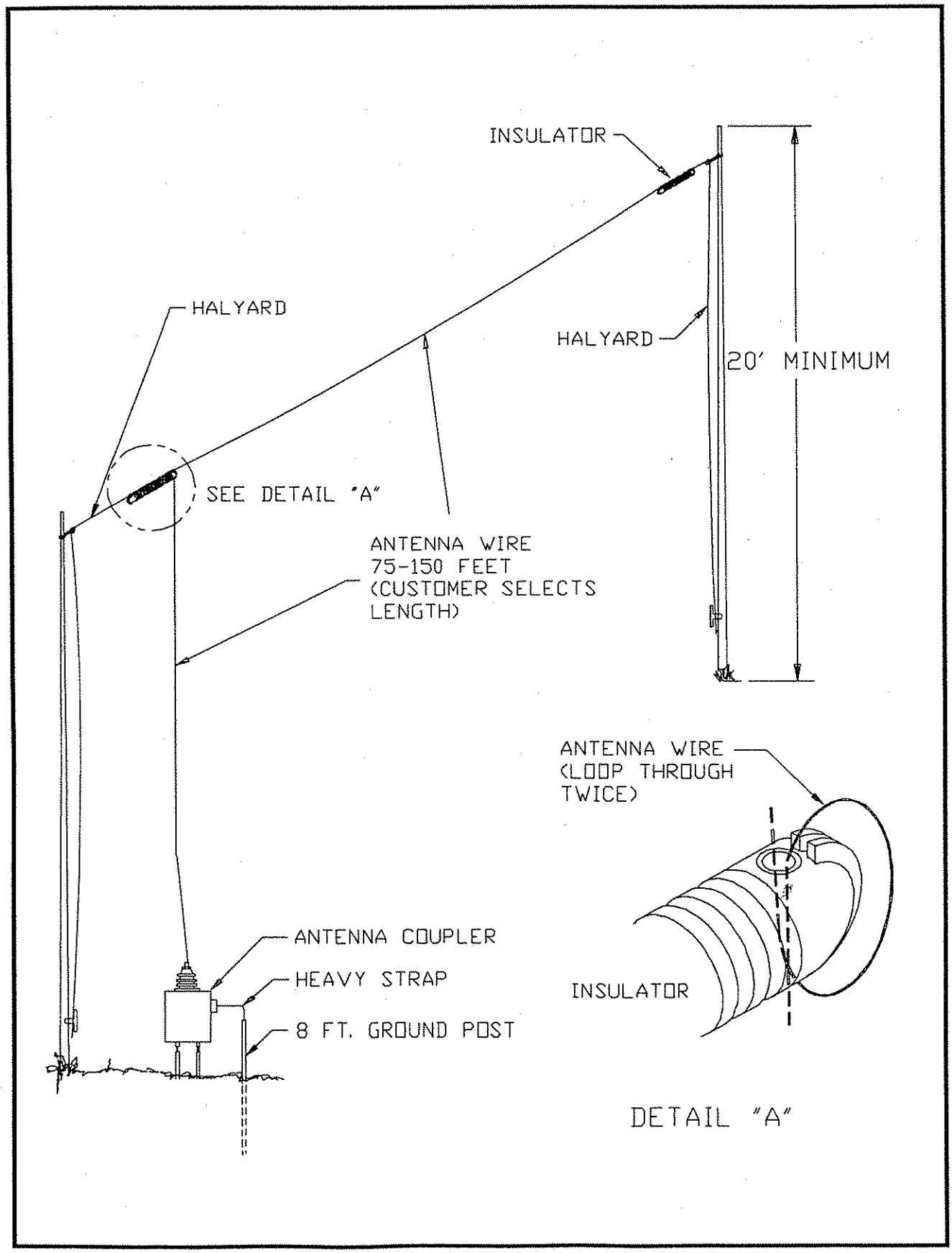

Figure 2.5 KW Longwire Antenna Kit.

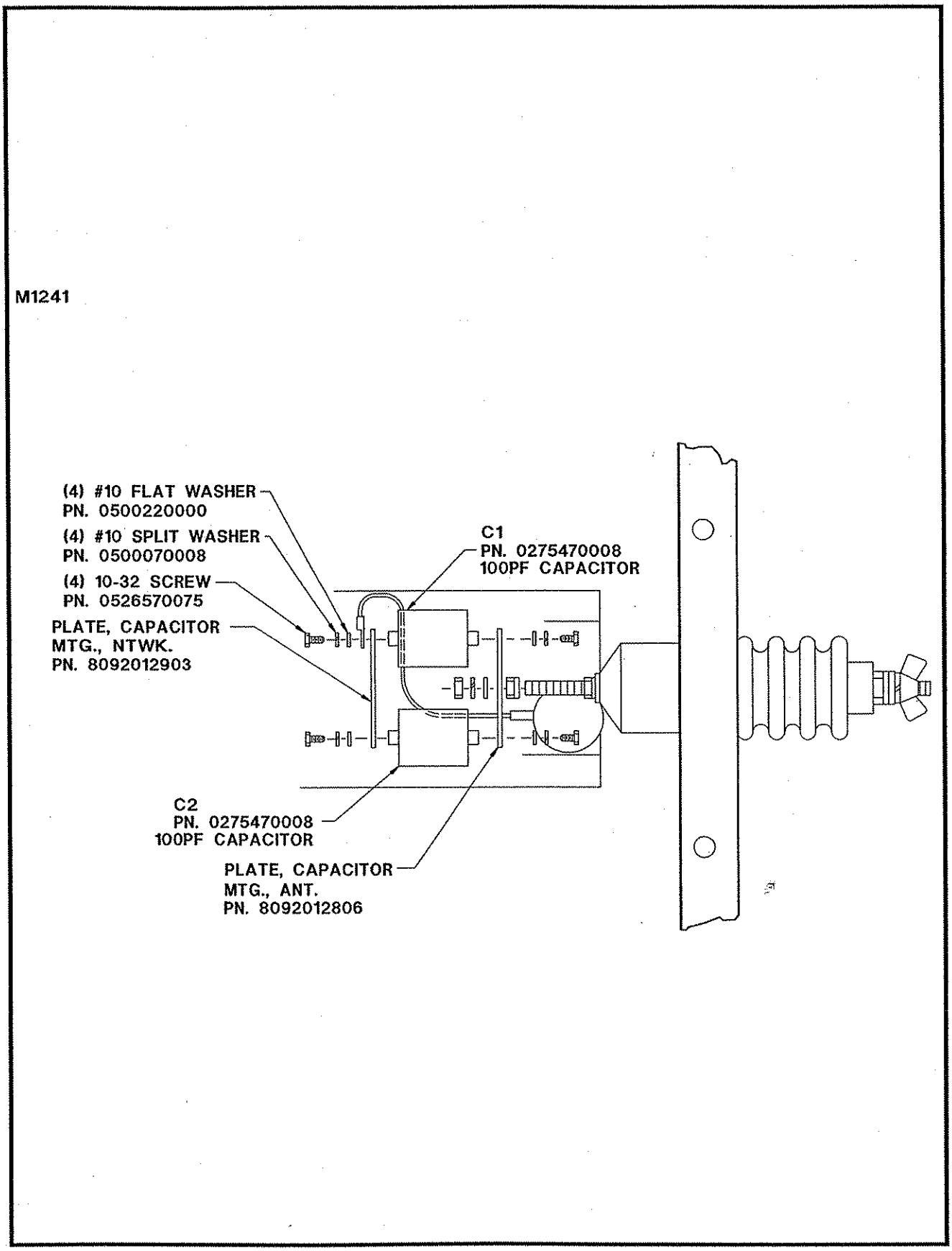

Figure 2.7.1 Long-Wire Adapter Kit (1A1A5) 81200909003 Installation. Configured for Long-Wire Operation

M1221

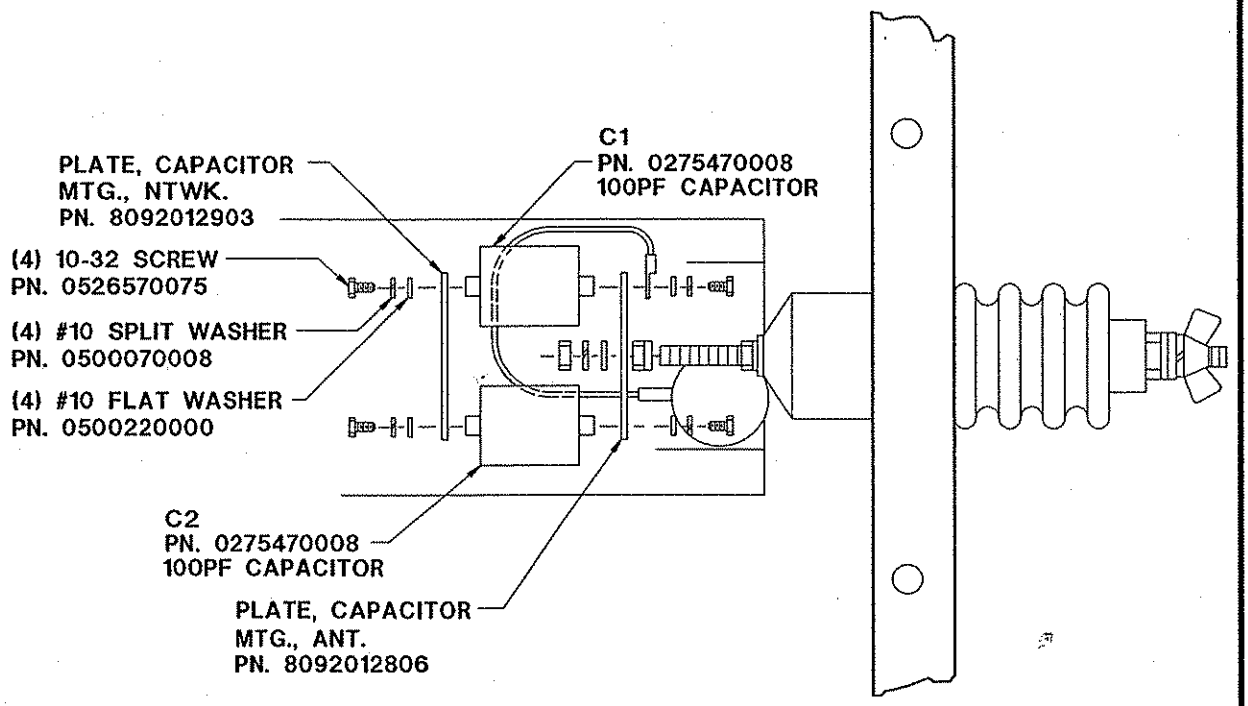

Figure 2.7.2 Long-Wire Adapter Kit (1A1A5) 81200909003 Installation. Configured for Whip Antenna Operation

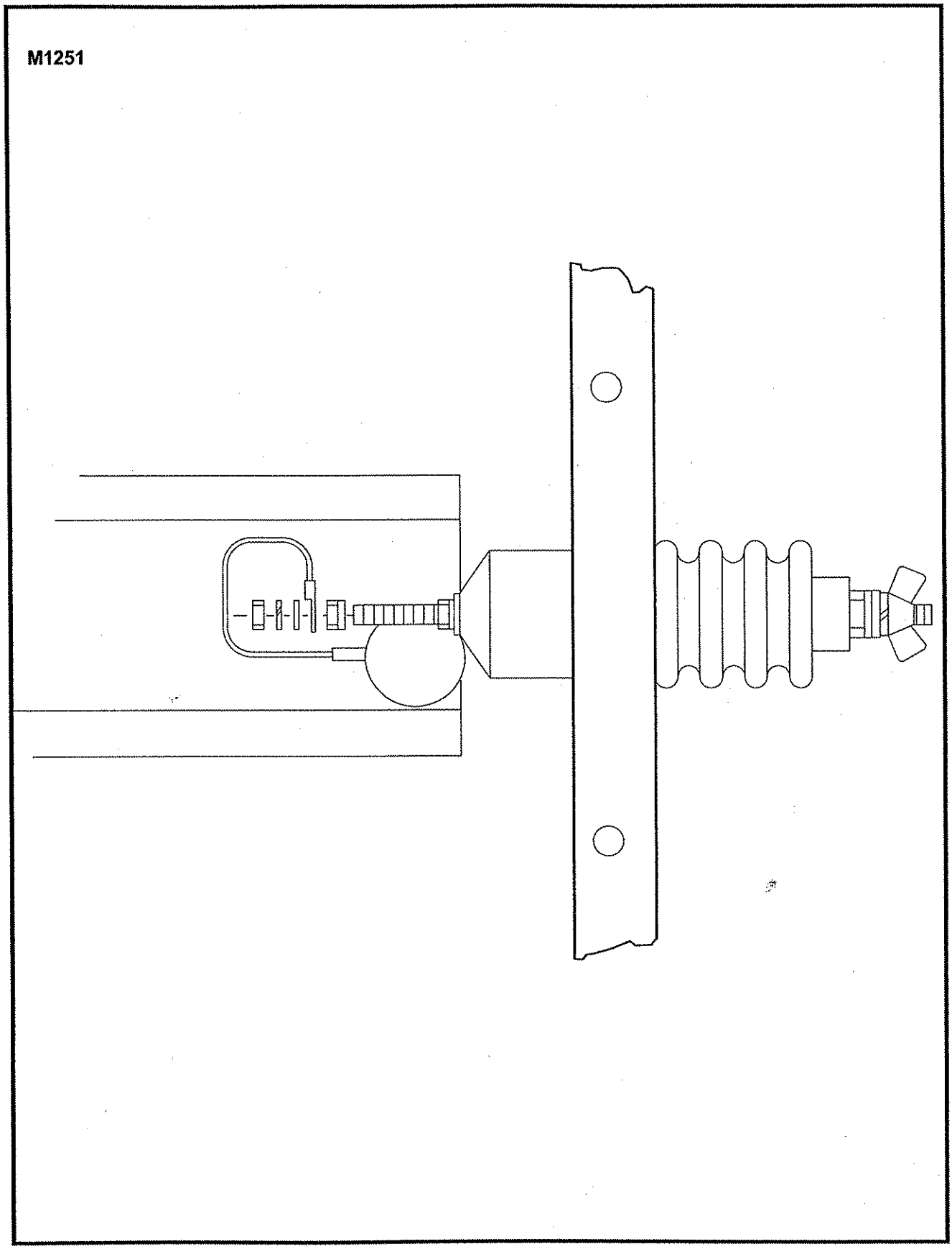

Figure 2.7.3 Assembly/Disassembly of Antenna Output Lead
(Long-Wire Adapter Kit Not Installed)

THIS PAGE INTENTIONALLY LEFT BLANK.

SECTION III

OPERATION

3.1 GENERAL

The CU-9150 Automatic Digital Antenna Coupler operates with the LPA-9600 1 kW or LPA-9500 500 Watt Solid State Linear Power Amplifier and 9000 Series Exciters/Transceivers. Refer to the LPA-9600 or LPA-9500 manual and/or the applicable Exciter/Transceiver manual for operational considerations of the individual unit.

3.2 OPERATING THE CU-9150

3.2.1 OPERATION WITH 9000 SERIES EXCITERS/TRANSCEIVERS AND LPA-9600

Ensure that the Exciter/Transceiver, LPA-9600/LPA-9500 and CU-9150 are installed properly. Refer to Section II of the applicable manuals.

a) Apply power to the Exciter/Transceiver and LPA-9600 and select 1 kW (LPA-9500 select 500 W).

b) On the LPA-9600/LPA-9500, the green POWER lamp will light and the LCD will display system message:

FAULT:	COUPLER UNTUNED,
METER:	FWD,
and PWR LVL:	1 kW. (LPA-9500 displays 500 W)

c) Select desired operating frequency on Exciter/Transceiver.

d) Depress the 'CPLR TUNE' pushbutton on the Transceiver Front panel.

e) On the LPA-9600/LPA-9500, the following system messages will be displayed: 'COUPLER TUNING', 'COUPLER TUNED', 'KW SYSTEM OPERATIONAL'.

f) Tuning will be accomplished in typically 1 to 2 seconds.

g) If during a tune attempt, the red FAULT lamp of the LPA-9600/LPA-9500 lights, the CU-9150 has not tuned. Depress the 'CPLR TUNE' pushbutton again and allow the system to retune. If FAULT does not clear, see Section V of this manual and the Exciter/Transceiver manual.

3.2.2 1000 WATT OPERATIONAL CHECKOUT

a) Select CW 'MODE' and frequency 29.9900 MHz. Depress 'CPLR TUNE' pushbutton and observe a 'SYSTEM READY' condition.

b) Key the Exciter/Transceiver with the CW key and check the forward and reflected power on LPA-9600 front panel meter. An acceptable tune should show 700 to 1000 Watts forward and 28 to 40 Watts reflected maximum. See Chart below: (**NOTE:** The LPA-9500 should show 300 to 500 Watts.)

FORWARD WATTS	REFLECTED WATTS MAXIMUM
700	28
800	32
900	36
1000	40

Acceptable Reflected Power Chart for VSWR 1.5:1. for LPA-9600.

FORWARD WATTS	REFLECTED WATTS MAXIMUM
350	14
400	16
450	18
500	20

Acceptable Reflected Power Chart for VSWR 1.5:1. for LPA-9500.

c) Continue tuning through the HF Spectrum from 1.6 to 30 MHz in 1 MHz steps and check for an acceptable tune at each frequency. If problems occur, go to Section V Table 5.1 Fault Analysis to determine correction of problem.

SECTION IV

THEORY OF OPERATION

4.1 GENERAL

The CU-9150 is a fully digital antenna coupler designed for use with the LPA-9600 1 kW or LPA-9500 500 Watt Linear Power Amplifiers and the Sunair 9000 series Exciters and Transceivers. The coupler is rated for 1000 Watts PEP or average power and will tune common shipboard and ground based antenna systems such as 23 foot and 35 foot verticals or 50 to 150 foot end-fed wire antennas.

A 128 channel non-volatile memory system is provided for use with Transceivers or Exciters providing channel information to the coupler.

4.2 ANTENNA IMPEDANCE MATCHING NETWORK

The antenna impedance matching network is a lowpass PI and PI-L network depending on the frequency and antenna system employed. The Lowpass PI-network offers several desirable advantages over high-pass network configurations such as:

- Harmonic Attenuation. 5 to 20 dB depending on the antenna type and operating frequency.
- Pipeline Operation (Bypass) for Automatic Link Establishment (ALE) receive scan operation. This technique conserves mechanical relay life.

The PI-network can be viewed as two L-networks placed in back-to-back configuration. The PI-network is very flexible, it can provide a number of network component solutions for any one impedance matching problem, by modifying the antenna impedance with shunt output capacitance. However, excessive amounts of shunt output capacitance results in a low network impedance producing significant circulating current in both the series-L and shunt C components. The CU-9150's RF network and tuning algorithm have been carefully designed to use the minimum amount of output capacitance required to achieve a satisfactory network solution. This ensures that the matching network operates at maximum efficiency and reduces electrical stress on the RF network components and relays.

Operation at 5 MHz and above with the specified antennas results in a PI-network solution. When operating below 5 MHz, with electrically short antennas, a large negative reactive component will appear at the antenna terminal. To solve this, additional series inductance is required, three selectable values are included in the network, transforming it to a PI-L. Frequency information is supplied to the coupler via the channel lines.

A block diagram of the CU-9150 is shown in Figure 4.1. The input capacitor bank (50 Ohm side), located on the Input Capacitor Assembly consists of C1 through C11D and provides binary stepped capacitance values from 5.6 pF to 10,233 pF. The Lseries inductor assembly consists of inductors L1 through L9 providing binary stepped inductance values of 0.025 uH through 12.75 uH. The Lout assembly consists of L10 through L12, providing 12.6 uH through 63 uH. The output capacitor bank, consisting of C2 through C6D provides binary stepped capacitance values from 25 pF to 775 pF. Capacitor C1, 15 pF serves as a fixed ballast capacitor.

4.3 CHASSIS ASSEMBLY 1A1

4.3.1 GENERAL

The chassis assembly contains the RF network components, Input Connector Assembly 1A1A2, CPU Assembly 1A1A3, RF Detector 1A1A4A1, Input Capacitor Assembly 1A1A4A2 and Mother Board Assembly 1A1A1.

4.4 INPUT CONNECTOR ASSEMBLY 1A1A2

4.4.1 GENERAL

The Input Connector Assembly serves as the interconnect between the LPA-9600/9500 and 9000 series radio equipment.

4.4.2 CONFIGURATION AND OPERATION

The Input Connector Assembly provides T-lowpass RF filters on each of the signal, control and power lines entering and exiting the CU-9150 with the exception of the TX/RX data lines. The TX/RX data lines are used during service or system evaluation and are normally not connected during routine operation. The T-lowpass filters prevent unwanted RF radiation emitted by the antenna matching network from appearing on the control cable and interfering with the companion transceiver or exciter circuitry.

In addition to this protection, each of the aforementioned lines are supplied with Metal Oxide Varistor, transient voltage surge suppressors. The suppressors will minimize transient voltage levels that can appear on any signal, power or control line in the event of a lightning surge.

4.5 CPU ASSEMBLY 1A1A3

4.5.1 GENERAL

The CPU Assembly contains the system microprocessor, memory, D/A converter and relay drivers.

4.5.2 MICROPROCESSOR

The CPU assembly utilizes the 80C188EB (16 bit internal / 8 bit external) microprocessor, U103, operating at an external clock speed of 14.7456 MHz. The 80C188EB contains internal chip select logic, 3 hardware timers, parallel I/O, and two asynchronous serial I/O channels in single package. Its operating firmware is contained in EPROM (27C010-040), U30. SRAM (TC551001), U302 is used to hold program variables and temporary data such as phase and magnitude discriminator error correction levels. EEPROM (28C64-256), U303 is non-volatile memory used to store channel network solutions.

The 80C188EB controls its associated memory and peripherals using three busses:

1) AD0 through AD7, a multiplexed address/data bus containing either data or address information.

2) A8 through A15, which always contain address information.

3) The Control/Status bus which contains signals RD, WR, IO/M, and ALE.

4.5.3 SERIAL COMMUNICATION

Communication between the microprocessor and the Serial Breakout Board on the TS-9150 Diagnostic Test Set is mainly accomplished by U101. U101 is a MAX490 RS-422 interface chip. Since R111 and R112 are installed and L101 and L102 are not installed, the system is configured for transmitting RS-422 data only. This data is sent over the control cable to the Serial Breakout Board, where it is converted to RS-232 levels. After conversion, the data is sent to a PC for display.

4.5.3 A/D CONVERTER

U208 is an LTC1290 12 bit analog to digital converter. It reads the analog voltages from the RF Detector board and converts them to a digital serial stream which can be read by the microprocessor. The output values from the LTC1290 are accurate to within 1.25 millivolts.

4.5.4 RELAY DRIVERS

Several different types of relay drivers are used on the CPU board. The first type is the UCN5801A (U401-403). These drivers supply coil current to the relays on the Input Capacitor board. U401, U402, and U403 are addressed over the parallel data bus of the microprocessor.

The second type of relay driver is a UCN5842A (U501-U504 and U304). These drivers are loaded serially by the microprocessor. U501 through U504 are used to drive the K44P type relays on the coupler chassis. The K44P relays are used to switch the Lseries and Cout network components. U304 lights the status LEDs and sends the READY and FAULT signals back to the radio. U304 also drives the tune/bypass relays on the RF Detector board (1A1A4A1K1 and 1A1A4A1K2), and the soft start relay on the motherboard (1A1A1K101).

The last relay driver type consists of U404, U405, and Q401-Q404. U404 is addressed over the parallel data bus. U405 converts the 5 volt output of U404 to 12 volt logic which drives Q401 through Q404. These transistors provide the coil current for the KC-12 relays on the coupler chassis. The KC-12 relays are used to switch the Lout network components.

4.5.5 CHANNEL CHANGE AND TUNE COMMAND DETECTORS

In normal operation, the 80C188EB microprocessor is only active when tuning or changing channels. The rest of the time, the microprocessor is in "Powerdown Mode". In Powerdown Mode, the microprocessor oscillator is stopped. This prevents the oscillator from being heard by the radio receiver.

When the microprocessor is in Powerdown Mode it can only be started up by a RESET signal or a non-maskable interrupt (NMI). Therefore the CPU assembly includes circuitry to detect when the channel information from the radio has changed. When the channel does change, an NMI signal is generated.

The channel change detector consists of U604, U605, and U601. The microprocessor reads the channel lines through U605. Every time a read is performed, the state of each channel line is latched by U604. U605 compares the current channel state from the radio with the state stored in U604. If they are different, a CHANNEL CHANGE signal is sent to U105. U105 generates an NMI signal to "wake up" the microprocessor when it receives this CHANNEL CHANGE signal or when a tune command is detected through U104.

4.6 RF DETECTOR ASSEMBLY 1A1A4A1

4.6.1 GENERAL

The RF 1A1A4A1 Detector contains the phase and magnitude discriminators, -3 dB power pad and precision 50 Ohm calibration termination resistor.

The RF detector provides two variable dc signal voltages to the CPU. The phase signal voltage is proportional to the reactive component of the impedance and the magnitude signal voltage is proportional to the magnitude of the impedance. The phase and magnitude signals are referenced to 50 Ohms.

4.6.2 MAGNITUDE DISCRIMINATOR

The magnitude discriminator consists of RF transformer T2 and its associated components. It provides a means of measuring the relative magnitude of the transformed antenna impedance relative to 50 Ohms. For a impedance magnitude greater than 50 ohms, the magnitude discriminator produces an output voltage less than the + 2.5 VDC reference voltage. For a magnitude less than 50 Ohms, an output greater than the + 2.5 V DC reference voltage is produced. A voltage sample is provided from the transmission line by C8 and C9 and is rectified by CR9 producing a DC voltage proportional to the RF voltage on the line. A voltage proportional to the current in the transmission line is generated by transformer T2 and is rectified by CR7. Capacitor C8 is adjusted so that the voltage sample is exactly equal to the current sample when the transmission line is terminated with 50 Ohm non-reactive load. The output of this discriminator is supplied to A/D converter on the CPU assembly.

4.6.3 PHASE DISCRIMINATOR

The phase discriminator consists of transformer T1 and associated components. It provides a means of measuring the relative phase angle at the input to the tuning network by comparing the phase of the line voltage with line current. The phase discriminator output is zero when the transmission line voltage and the current samples are in phase (pure resistance terminating the transmission line). The voltage sample is delivered by C5 R9 and C6 which shifts the phase by 90 degrees. The current sample is generated by transformer T1 and
is in phase with the line current. The voltage sample is fed to T1 center tap and the resulting output is detected by CR4 and CR5 , producing a DC voltage proportional to the phase difference between the voltage on the transmission line and the current in the line. R8 is the phase discriminator balance control and is adjusted so the phase output is nulled (relative to +2.5 V DC) when the transmission line is terminated with a 50 ohm non-reactive load.

The output of this discriminator is supplied to A/D converter on the CPU assembly.

4.6.4 ATTENUATOR PAD, -3 dB

The 3 dB PI-attenuator pad consists of precision power resistors R1, R2, R3 and R4. The pad is switched between the antenna tuning network and the transmitter whenever the tune relays K1 and K2 are energized. The pad provides protection for the transmitter by limiting the impedance variations placed on the transmitter during the tuning cycle. When a satisfactory tune has been achieved, the pad is switched out. During normal operation (no tune cycle) the pad is not used.

Tune relays K1/ K2 and CR10 (Amber LED) are energized by the tune relay signal from the CPU Assembly.

4.6.5 50 Ohm CALIBRATION TERMINATION

A 50 Ohm, 1 % calibration termination resistor controlled by relay K3 allows the phase and magnitude detectors to be calibrated at the beginning of the tune cycle.

When the tune command is received from the transceiver the CPU assembly engages the -3 dB RF power pad and the calibration termination resistor. The phase and magnitude detectors are then evaluated at the tune frequency and their respective error voltages are temporally stored in the CPU memory. The calibration termination is then switched out-of-circuit and the detectors are applied to the tuning network. During the tune cycle the phase and magnitude detector voltage is compared with the 50 Ohm calibration voltage values stored in the CPU memory. The RF tuning network solution is adjusted by the CPU to arrive at the 50 Ohm calibration voltage levels.

This system provides two significant advantages over conventional RF detector systems:

The phase and magnitude detectors are calibrated for temperature and component drift each time the coupler is tuned.

The phase and magnitude detectors do not require periodic field alignment.

4.6.6 TX ONLY FUNCTION

The TX Only function is used under the following conditions:

Separate transmit and receive antennas

Two or more transmitters with collocated antennas. Typical of shipboard systems.

The TX Only function opens the RF transmission line between the RF network and the RF input connector J1. This occurs only when the TX ONLY jumper E3 to E4 is installed and the transceiver is in the receive condition or the exciter is in the standby condition. The open transmission line prohibits high voltage generated from the adjacent transmitter from appearing at peripheral equipment such as a Prepostselectors.

During tuning or transmitting the KEYLINE is low (less than 12 V DC). Comparator U1-A buffers the low and turns Q2 off.

During receive the KEYLINE is high (greater than 12 V DC). Comparator U1-A buffers the high, turning Q2 on. Q2 energizes relay K1. The common contact of K1 are connected to the normally open and the common contact of K2 are connected the normally closed contact of K2, thus opening the RF path to the RF IN terminal J1.

4.7 INPUT CAPACITOR ASSEMBLY 1A1A4A2

4.7.1 GENERAL

The Input Capacitor assembly is located on the 50 Ohm side of the RF tuning network.

4.7.2 CONFIGURATION AND OPERATION

The Input Capacitor Assembly 1A1A4A2, consists of eleven binary capacitance values from 5.6pf to 10,233pf in 5.6 pF steps. Each binary capacitance value is constructed from porcelain high RF power multilayer capacitors. Theses capacitors are specifically characterized for RF transmitting duty and are ideally suited for antenna matching network application. Each of the individual capacitance value are controlled by a single or dual magnetic latching relay. The latching relays operate by placing a 10 ms pulse on the OPEN or CLOSE field winding. Maximum operating time is 5 ms. Relay drivers and their control is provided by the CPU Assembly.

4.8 MOTHER BOARD ASSEMBLY 1A1A1

4.8.1 GENERAL

The Mother Board 1A1A1 interconnects all assemblies, including the RF network relays, through printed circuit wiring tacks, with exception of the Input Connector Assembly which is connected to the Mother Board by ribbon cable.

4.8.2 DC POWER

+28 Volt DC power, supplied by the transceiver or exciter, is filtered by capacitors C1 and C2. A total of 13,600 uF is provided. During power-up the capacitors are charged through a 3 Ohm resistor, R1. When the CPU +5 V DC power is achieved and the microprocessor is operating correctly, the microprocessor energizes K101, bypassing resistor R1.

4.8.3 SERIES L AND SHUNT C RELAYS

The series L, K1-9 and Shunt C, K10-14, relays utilize latching high-speed RF relays that switch the inductive series and capacitive shunt network elements. The relays operate by placing a 7 ms pulse on the OPEN or CLOSE field winding. Maximum operating time is 5 ms.

Each relay is rated for 7 kV and 35 amperes at 2.5 MHz. These ratings, of course decrease as the operating frequency increases, but in all expected network configurations, the relays are conservatively rated.

4.8.4 L OUT RELAYS

The L Out relays, K16, 17 and 18, control the high-value series inductors. These relays and associated network components are used with electrically short antennas such as 23 or 35 foot whip antennas and operating frequencies below 3 MHz. At 1000 Watts extremely high voltages and high currents can be expected in the L-Out network. This places special operating requirements on these relays. Each relay is rated for 15 kV and 30 amperes at 2.5 MHz. In all expected network configurations, the relays are conservatively rated.

The L-Out relays are conventional non-latching relays and must have continuous field current to operate.

4.9 INTERFACE REQUIREMENTS FOR THIRD PARTY EQUIPMENT

4.9.1 SIGNAL DESCRIPTIONS

TUNE COMMAND: This signal is used to initiate a coupler tune. A low is 0V to 2.5V and a high is 7.5V to 12V. A high on this line indicates that the radio system is requesting a tune cycle. The coupler will respond by bringing +28V TUNE ENABLE high (to 28V). The radio system should then bring TUNE COMMAND low and wait for the coupler to bring +28V TUNE ENABLE low. At this point the coupler is ready to receive frequency information over the channel lines. The radio system should then output the frequency in megahertz, in packed BCD format, on the channel lines. Bringing TUNE COMMAND high will cause the coupler to latch the frequency information. When the coupler brings +28V TUNE ENABLE high for the second time, it indicates that the frequency information has been read and that the radio should restore the channel to the channel lines. See figure 4.9.1.1 for details of this operation and timing requirements. TUNE COMMAND should be brought low before the application of tune power.

+28V TUNE ENABLE: This is a PNP open collector output. Maximum output drive is 15 mA. Maximum output voltage is the voltage at the +28V supply input. See TUNE COMMAND for details regarding the meaning of this output.

READY: This active low output is pulled low when the coupler is in a tuned stated and can accept 1KW RF power. This is an open collector output. At a sink current of 100 mA, the output voltage will be less than 1.1 V. This output is rated for 50 V in the off state. When READY is pulled low, indicating the end of a successful tune, the radio system should stop transmitting tune power. When the coupler detects that tune power has been removed, it will bring +28V TUNE ENABLE low. At this point the coupler is ready to operate at the 1KW power level.

FAULT: This active low output is pulled low when the coupler has failed to find a network solution. This is an open collector output. At a sink current of 100 mA, the output voltage will be less than 1.1 V. This output is rated for 50 V in the off state. When FAULT is pulled low, indicating the end of a failed tune, the radio system should stop transmitting tune power. When the coupler detects that tune power has been removed, it will bring +28V TUNE ENABLE low.

KEYLINE: This signal is presently unsupported by the coupler and should be left unconnected.

Channel Lines: These 8 channel lines are used to provide the coupler with channel and frequency information. A 10K pull-down resistor is provided which pulls each line to ground. Each line should be pulled to between 3.5V and 5.0V to assert a high. Channels 0 thru 127 are valid for normal operation. These lines are active low, so to select channel 0 (for example) all lines must be pulled to 5V. These lines are also active low when passing frequency information in packed BCD (Binary Coded Decimal) format, so to select 15 MHz (for example), 0xEB must be driven on the channel lines.

COUPLER DETECT: This line allows the radio system to detect the presence or absence of a coupler. This signal is high (about 21 V) when a coupler is present. Current draw from this line should be less than 30mA.

+28V: This is the power supply for the coupler. This supply must be between 22V and 30V. Maximum inrush current is limited to 10A by the 3 ohm resistor R1 on the motherboard. Maximum idle current is 2A. Maximum current draw during a tune cycle is 5A.

RF INPUT: Maximum RF input power when READY is low is 1KW PEP. Tune power should be between 25W and 75W.

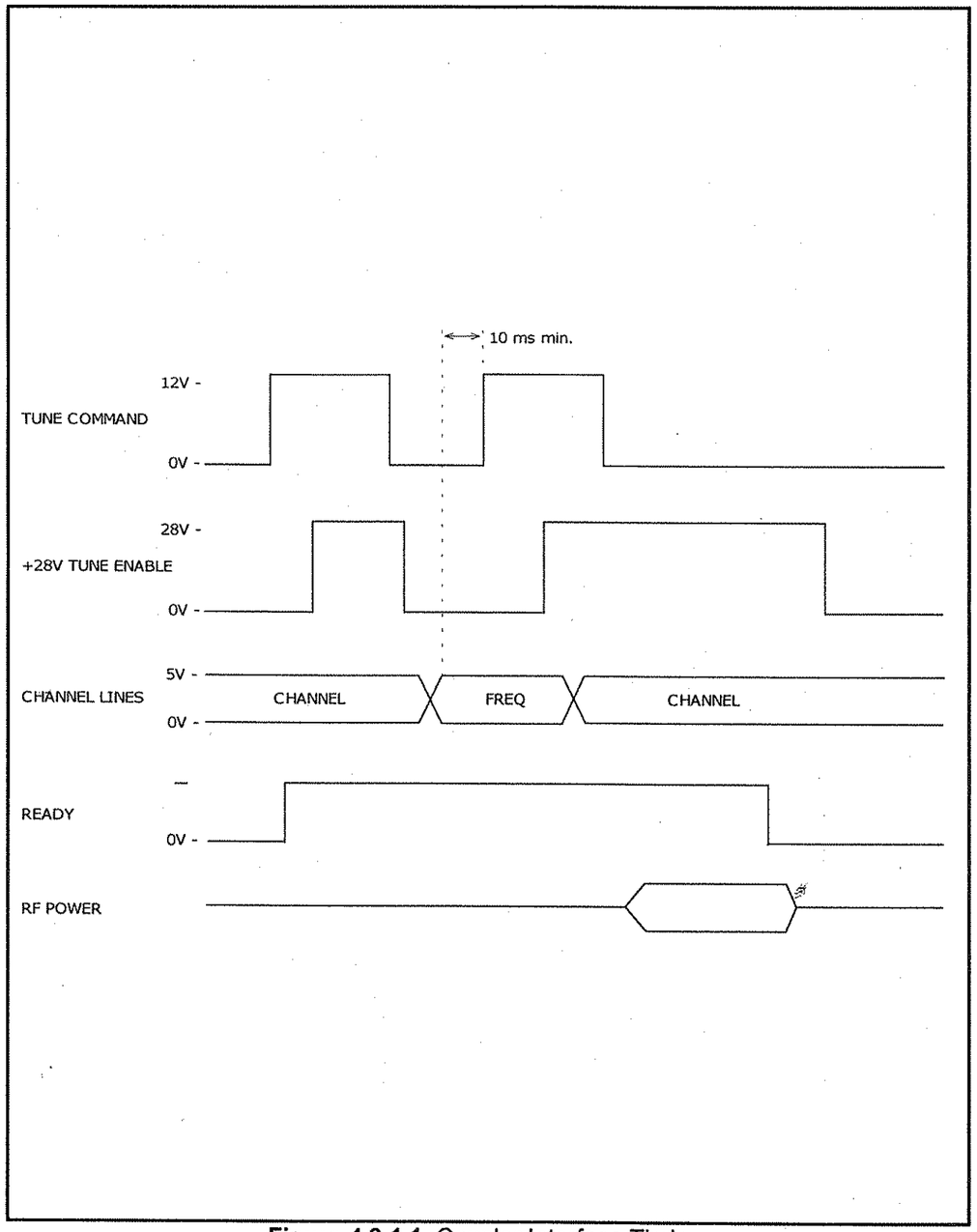

Figure 4.9.1.1 Coupler Interface Timing.

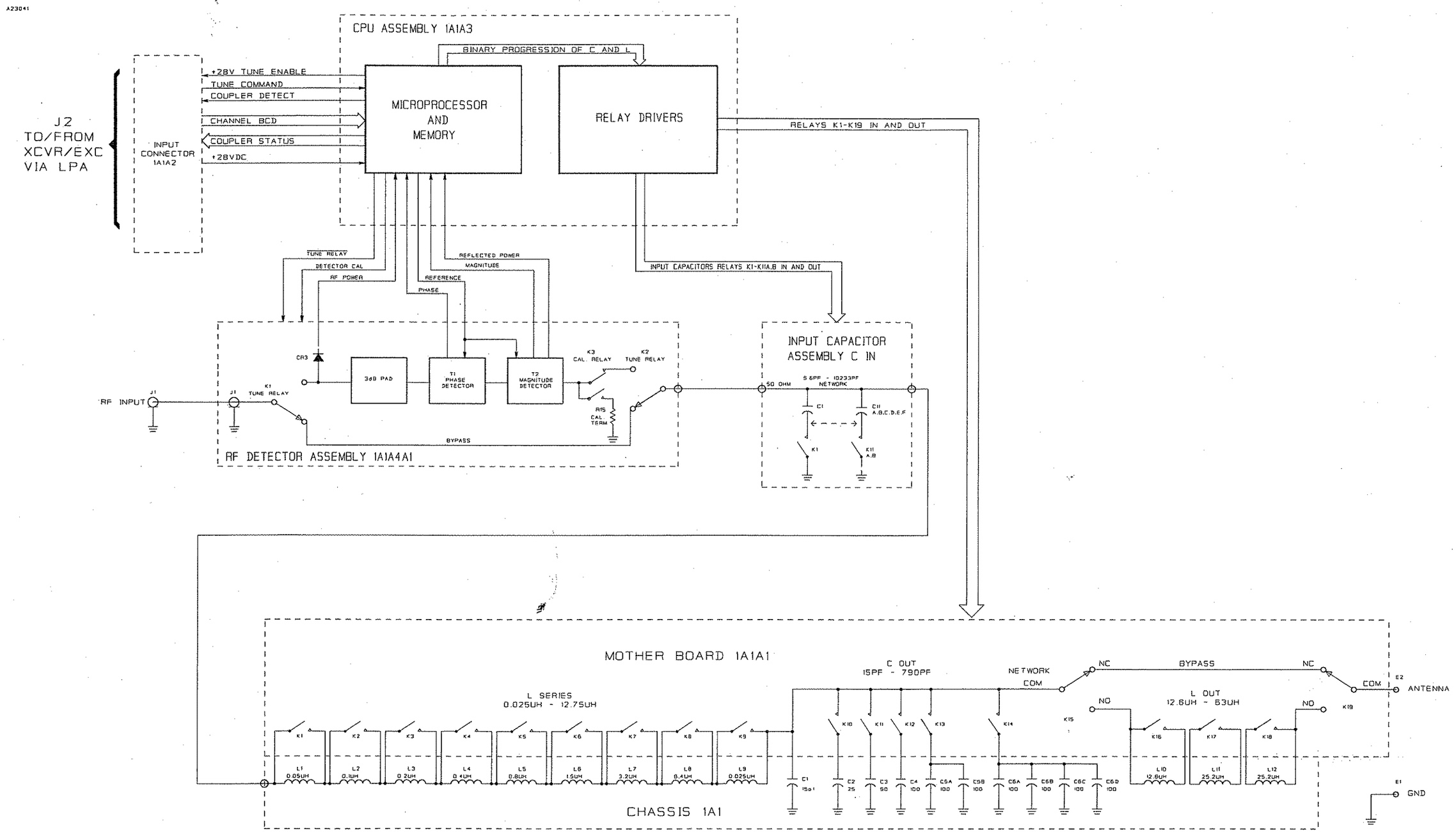

Figure 4.1 CU-9150 Block Diagram, page 1/1.

THIS PAGE INTENTIONALLY LEFT BLANK

SECTION V

MAINTENANCE AND REPAIR

5.0 GENERAL

This section provides the procedures for preventative maintenance, fault isolation, maintenance and repair to the Lowest Repairable Unit (LRU) level.

5.1 PREVENTATIVE MAINTENANCE

Scheduled preventative maintenance ensures reliable operation of the CU-9150 antenna coupler.

Interval: Two (2) Weeks.

When installed in a harsh maritime or tropical environment (i.e. salt air, salt water) wash the complete outside of the coupler with fresh water.

Interval: Monthly

Inspect the unit for dust, dirt and foreign substance accumulation on the output insulator. Also inspect for loose electrical connections, missing hardware, case deformation, damaged fasteners or damaged electrical connectors.

Clean, adjust or replace as applicable.

Interval: Once a year.

1. Replace the gasket as described in Section 5.1.1 Gasket Replacement.

2. With the top cover removed inspect the following:

a. Inspect connectors for broken parts, check insulation for cracks and check connector pins for damage misalignment or bad plating

b. Inspect chassis wiring and subassemblies for any signs of physical damage or charring. Any damaged wires must be replaced.

c. Inspect for leaky, blistered, charred or cracked electronic or electrical components. Check for loose or corroded terminal connections.

5.1.1 Gasket Replacement

Whenever the coupler is opened the gaskets should be carefully inspected to ensure that they are not cracked, broken, frayed or worn. If the gaskets require replacement, use the materials listed below and complete the following procedure. See Figure 5.1.

Materials Required:

The chemicals and gaskets specified in the procedure are available from Sunair.

8120001265: Gasket, Flat, Weldment, Case. Quantity 1 required per coupler.

1006990038: Cord, O-ring, .210 Diameter. Neoprene. Specify 8.0 feet per coupler when ordering.

0864820003: GC Bond Cement, 2 FL. OZ. (59 ML).

0840330006: Super Glue, 0.07 OZ. (2 Grams).

1013140001: Super Lube Corrosion Inhibitor, 3.0 OZ. (85 Grams).

Replacement Procedure:

1. Remove and discard the flat and O-ring gaskets.

2. Clean the case gasket mounting surface and the O-ring gasket mounting grove on the top cover.

3. Install the self-adhesive flat gasket P/N: 8120001265. Ensure that the holes in the gasket align with the holes in the case.

4.0 Cement the O-ring gasket P/N: 1006990038 into the top cover groove using GC Electronics GC Bond cement, GC Electronics P/N: 10-4302 or equivalent at approximately 3 spots along each of the 4 sides.

4.1 Join the O-ring ends and trim the excess material with a razor knife.

4.2 Apply a small amount of Ross Super Glue or equivalent where the ends meet.

5.0 Apply a small amount of Super Lube Corrosion Inhibitor, Permatex (Loctite) P/N: 82325 or equivalent to each of the 18 top cover 10-32 x 1" mounting screws.

6.0 Install the top cover using the 10-32x1" mounting screws, lock and flat washers. Hand tighten the mounting screws.

6.1 Tighten the screws using a toque-screw-driver adjusted for 15 inch pounds. Follow the torque sequence procedure described in Figure 5.1.

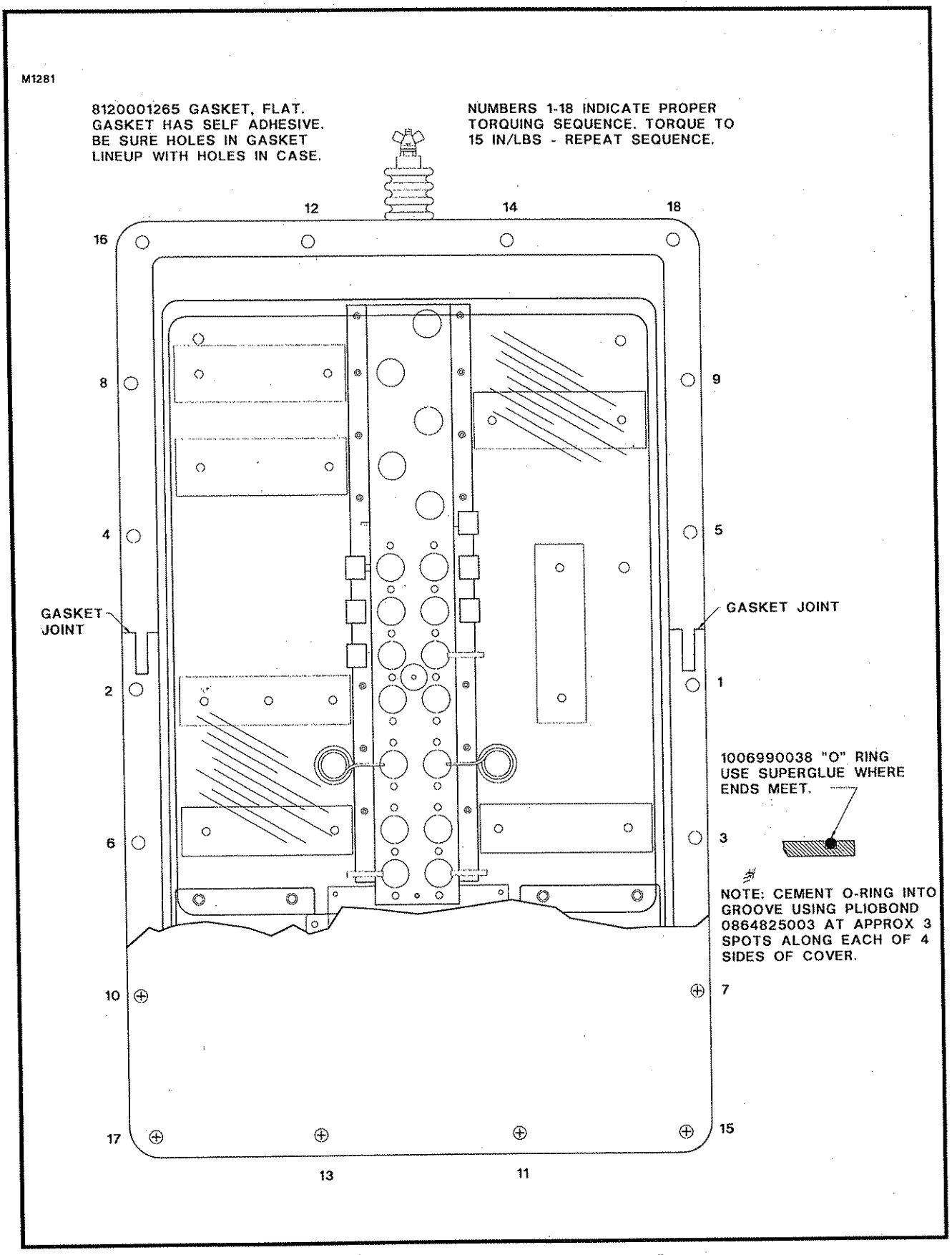

Figure 5.1 Gasket Installation and Torque Sequence.

THIS PAGE LEFT INTENTIONALLY BLANK

5.2 DISASSEMBLY

Disassembly should be only to the extent necessary to accomplish the repair or replacement of the defective LRU.

5.2.1 COVER REMOVAL

Three covers are present in the CU-9150. For most maintenance procedures, all three covers must be removed. The top cover is taken off by removing the 18 Phillips head screws around the perimeter.

The clear plastic safety shield is removed by unscrewing 7 Phillips head screws.

The inner cover is removed by unscrewing 4 Phillips head screws.

5.2.2 CPU REMOVAL

The CPU Assembly (1A1A3) is removed by grasping it firmly at the top of the assembly and pulling straight up.

5.2.3 RF DETECTOR/INPUT CAPACITOR REMOVAL

Before removing the RF Detector/Input Capacitor Assembly (1A1A4), disconnect the coaxial cable going to the RF Detector (1A1A4A1J1) and remove the screw connecting the Input Capacitor Board (1A1A4A2) to the RF Network on the 1A1 Chassis Assembly.

CAUTION: FAILURE TO REMOVE THE SCREW CONNECTING THE 1A1A4A2 INPUT CAPACITOR BOARD TO THE RF NETWORK ON THE 1A1 CHASSIS WILL RESULT IN DAMAGE TO THE INPUT CAPACITOR BOARD AS THE ASSEMBLY IS REMOVED.

Remove the RF Detector/Input Capacitor Assembly by grasping it firmly at the top of the assembly and pulling straight up.

5.2.4 CHASSIS REMOVAL

Before removing the Chassis Assembly (1A1) from the case, remove the retaining clip from the ribbon cable going from the Motherboard (1A1A1) to the Input Connector Board (1A1A2J2) and disconnect the cable. Also disconnect the coaxial cable going to the RF Detector (1A1A4A1J1).

If the 1A1A5 Long Wire Adapter Kit is installed:

Remove the lead going from K19 on the Chassis to the Long Wire Adapter Kit (See Figure 2.7.1 for details).

Using a 7/16" nutdriver, remove the nut holding the Long Wire Adapter to the antenna output insulator and remove the Long Wire Adapter.

If the 1A1A5 Long Wire Adapter Kit is not installed:

Remove the lead going from K19 on the Chassis to the antenna output insulator.

Using a 7/16" nutdriver, remove the 7 nuts holding the Chassis to the bottom of the case. Remove the 7 split washers. See Figure 5.2.4.1.

CAUTION: When removing the Chassis Assembly, grasp it only by the sheet metal components or by the white standoffs that support the clear plastic safety cover. Do not grasp the inductors, capacitors, relays, straps, or wiring.

Remove the Chassis from the case in the following manner:

-- Lift the Chassis straight up about 1/2" to clear the studs in the case.

-- Lift the CPU side of the Chassis high enough to clear the side of the case and slide the Chassis out in that direction.

5.3 INDICATORS

READY	This green LED on the 1A1A3 CPU (CR302) indicates that the coupler is tuned and ready for RF from the radio system.
TUNING	This yellow LED on the 1A1A3 CPU (CR301) indicates that the coupler is attempting to find a tune solution.
TUNING FAULT	This red LED on the 1A1A3 CPU (CR303) indicates that the coupler failed to find an acceptable tune solution during the previous tune cycle.
CPU FAULT	This red LED on the 1A1A3 CPU (CR304) indicates that a software error occurred during the CPU program execution which prevents the program from continuing. The CPU will stop program execution at the point where the failure occurred, so the CPU must be reset, or the system power must be cycled, to resume normal coupler operation.
TUNE RELAY	This yellow LED on the 1A1A4A1 RF Detector (CR10) indicates that the magnitude discriminator, phase discriminator, and 3 dB pad are switched into the RF path. This indicator is only lit when the TUNING indicator on the CPU is lit.

5.4 TEST EQUIPMENT REQUIRED OR EQUIVALENT

Digital Multimeter	Fluke 77
Oscilloscope	Tektronix 465
Alligator clip cables	(2 required)

5.5 ALIGNMENT AND CHECKS

Unless a component of the 1A1A4A1 RF Detector Assembly has failed and required replacement, routine alignment of the CU-9150 is generally not required. This is due to the self calibrating nature of the CU-9150. At the beginning of each tune cycle, a 50 ohm calibration load is switched in and the CPU reads the output of the magnitude and phase discriminators. These readings are subtracted from all future measurements,

ensuring that minor discriminator imbalances over time, temperature, and frequency do not affect the network solution.

Alignment of the CU-9150 consists solely of adjusting a trimmer capacitor and a potentiometer on the RF Detector Assembly (1A1A4A1). For component and test point locations see Figure 5.5.1. The alignment is accomplished as follows:

1) Turn off the radio set.

2) Remove the 1A1A3 CPU Assembly.

3) Connect the multimeter negative lead to ground on the RF Detector (1A1A4A1TP6). Connect the positive lead to RF POWER (1A1A4A1TP1).

4) Using alligator clips, ground TP7 and TP8 on the 1A1A4A1 RF Detector to the chassis.

NOTE: It may be necessary to remove the 1A1A4 RF Detector/Input Capacitor Assembly in order to attach a test clip to TP8. See section 5.2.3 for removal instructions for this assembly. If the assembly is removed, be certain to remove the Phillips head screw which attaches the assembly to the 1A1 Chassis Assembly.

5) Turn the radio set on (it is permissible to power up the coupler without the CPU installed for alignment and troubleshooting). Set the frequency to 29.0 MHz. Set the mode to AM. Set the power level to 125W. If a linear amplifier such as a LPA-9600 or an LPA-9500 is in the system, turn it off.

CAUTION: APPLYING MORE THAN TUNE POWER (AM CARRIER POWER IN THE 125W POWER SETTING, WHICH IS ABOUT 40 WATTS) TO THE COUPLER DURING THIS ALIGNMENT PROCEDURE WILL DESTROY THE PAD AND THE CALIBRATION LOAD ON THE RF DETECTOR BOARD.

6) Key the radio. The multimeter should read 4.0 to 5.5 volts DC.

7) Unkey the radio. Move the negative lead of the multimeter to the REFERENCE test point (1A1A4A1TP5) and connect the positive lead to the REFLECTED POWER test point (1A1A4A1TP4). Key the radio. The reading on the multimeter should not exceed 0.5 volts DC.

8) Unkey the radio. Move the positive lead of the multimeter to the PHASE test point (1A1A4A1TP2). Key the radio. Adjust R8 on the RF Detector so that the reading on the multimeter is between -.02 and .02 volts DC.

9) Unkey the radio. Move the positive lead of the multimeter to the MAGNITUDE test point (1A1A4A1TP3). Key the radio. Adjust C8 on the RF Detector so the reading on the multimeter is between -.02 and .02 volts DC.

10) Unkey the radio and turn it off. Remove the alligator clips and the multimeter. Put the CPU back in the chassis.

5.6 TROUBLESHOOTING

5.6.1 COUPLER WILL NOT TUNE - NO RELAY ACTION - NO TUNING FAULT

1. Check for +28 volts DC at R1 on the 1A1A1 Motherboard Assembly. If the supply is not present, check for +28 volts at L29 on the 1A1A2 Input Connector assembly. If +28 volts is not present at L29, the problem is probably due to the control cable between the radio set and the CU-9150.

2. Check the voltage drop across R1 on the 1A1A1 Motherboard Assembly. A measured drop greater than .1 volts indicates that the soft start relay K101 on the 1A1A1 Motherboard Assembly is not being engaged by the 1A1A3 CPU. This is generally the result of the CPU not starting. Proceed to the next step for CPU troubleshooting.

3. Check for a green READY indicator on the 1A1A3 CPU after initial power-up. The lack of a READY indicator indicates that the CPU is not executing its program correctly.

   A. Check for +5V at U109 pin 20.

   B. Check for +12V at U405 pin 16.

   C. Check for a 14.7456 MHz signal with an amplitude of at least 4 volts peak to peak on both sides of Y101.

   D. If the three checks above look good, the CPU needs to be analyzed in its test fixture. See section 6.1.2.1.

5.6.2 COUPLER WILL NOT TUNE - NO RELAY ACTION - TUNING FAULT INDICATED

Note the amount of time that elapses between pressing the CPLR TUNE button on the radio and the coupler TUNING FAULT indicator lighting.

If this time is 10 seconds:

1. Using the oscilloscope, check for at least 20 volts peak to peak of RF at the RF INPUT to the coupler during the tune cycle. If RF is not present at the input to the coupler, a cabling problem probably exists between the radio set and the coupler.

2. If RF is present at the coupler input, check for the same signal at E1 of the 1A1A4A1 RF Detector Assembly. If the RF signal did not make it this far, the cable between the RF input and the RF Detector Assembly is probably bad.

3. Use the multimeter to check for 4.0 to 5.5 volts between TP1 (RF POWER) and TP6 (GROUND) during the tune cycle. The CPU waits for this signal to go high before starting to look for a tune solution.

If this time is 2 seconds:

The software revision in the transceiver or exciter does not support the CU-9150. Contact Sunair Product Support for software upgrade information.

5.6.3 RELAYS OPERATE BUT TUNING FAULT INDICATED

Run a BITE test. See section 6.1.2.4 for instructions and theory. If the BITE test fails, a TS-9150 Diagnostic Test Set is required to display which components the coupler suspects to be faulty.

If the BITE test is successful, the radio system is probably at a frequency where the coupler can not find an acceptable network solution. This situation can usually be alleviated by changing the frequency. If changing freqency is not possible and a long-wire antenna is being used, lengthening or shortening the antenna somewhat will often result in successful tunes.

5.6.4 COUPLER TUNES BUT MEMORY DOES NOT WORK

This situation is usually results when the coupler CPU does not receive the channel information from the radio correctly.

1. Check that the control cable is correctly wired.
2. Turn the radio set off. Using the multimeter, check each of the inductors on the 1A1A2 Input Connector Assembly for continuity.
3. Check L601 through L608 on the 1A1A3 CPU Assembly for continuity.
4. If the above checks fail to find the problem, replace the 1A1A3 CPU Assembly.

5.7 DIP SWITCH SETTINGS

All of the 1A1A3S201 CPU DIP switches should normally be in the down position.

After making a change to the DIP swich settings, a CPU reset is required to make the change effective. This can be done by pressing S101 on the CPU board or by powering the system down and powering back up again.

S201 SECTION	FUNCTION
8	Setting this switch to the UP position enables the keyline detector circuitry. This function is currently unsupported by the CPU software, so this switch should always be set to the DOWN position.
7	Setting this switch to the UP position stops the CPU from going into powerdown mode after tuning or changing channels. This switch should be in the up position when using the Display Board in the TS-9150 Diagnostic Test Set, but should be set to the DOWN position for normal operation.
6	Setting this switch to the UP position causes the coupler to allow more time for the relays to change state. As the relays age, they take longer to change state. Try setting this switch to the UP position on couplers which start to indicate tune failures intermittently and which have been in service for several years. The tune timeout changes from 10 seconds to 17 seconds when this switch is set.
5	Not used.
4	Not used.
3	Not used.
2	Not used.
1	Not used.

CU-9150

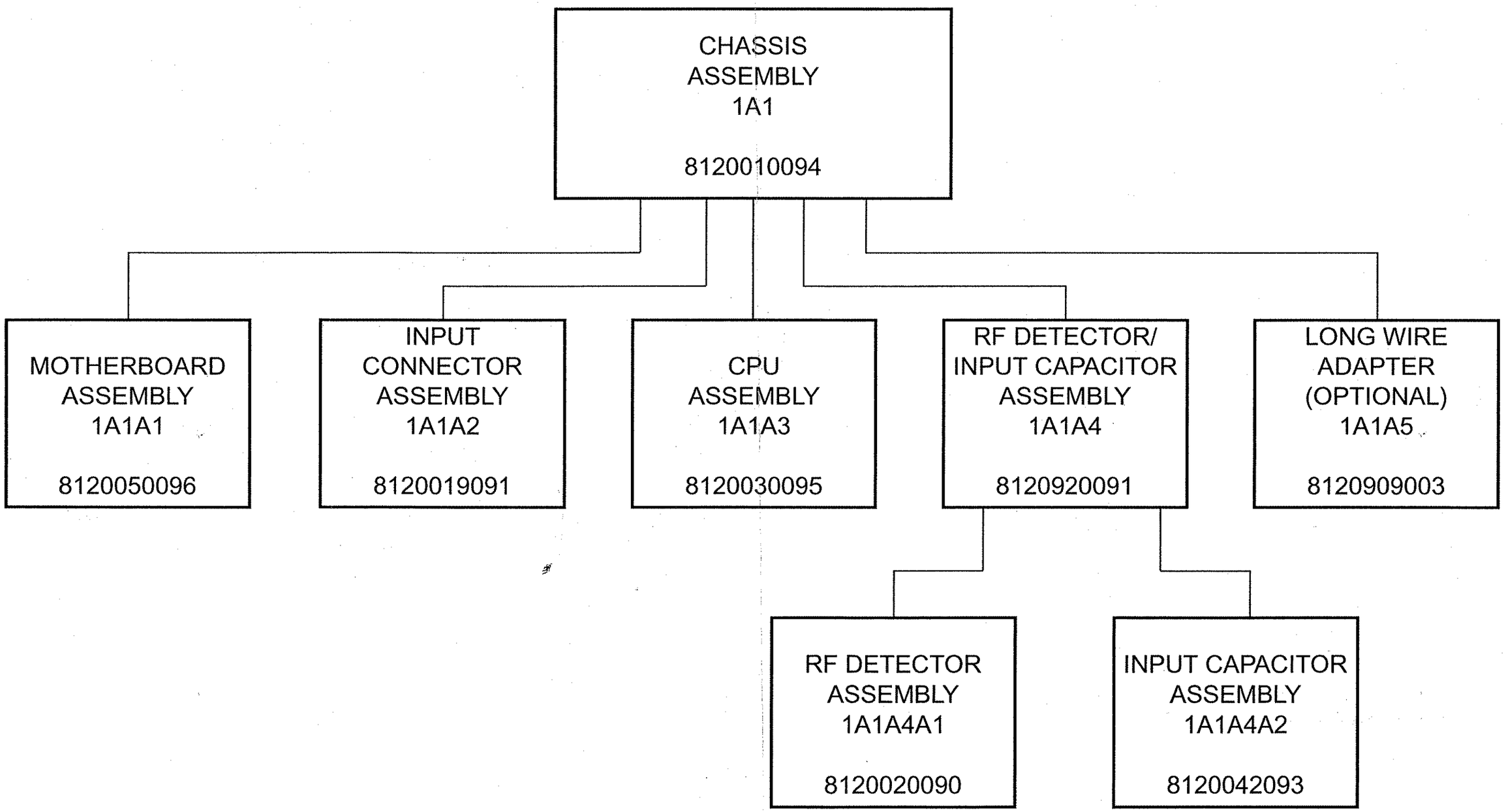

Figure 5.1.1 CU-9150 Assembly Tree.

M1191

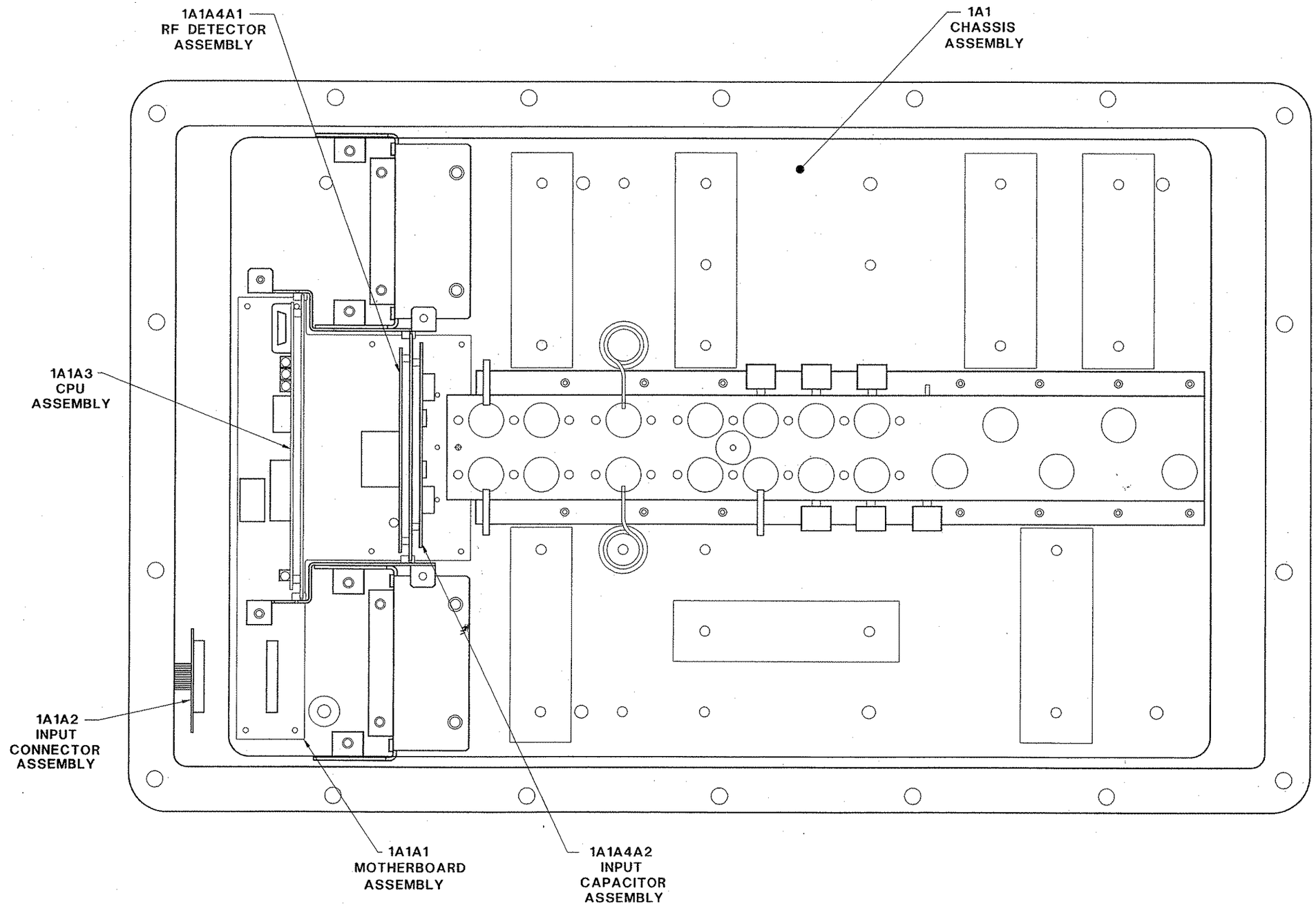

Figure 5.1.2 Assembly Locations.

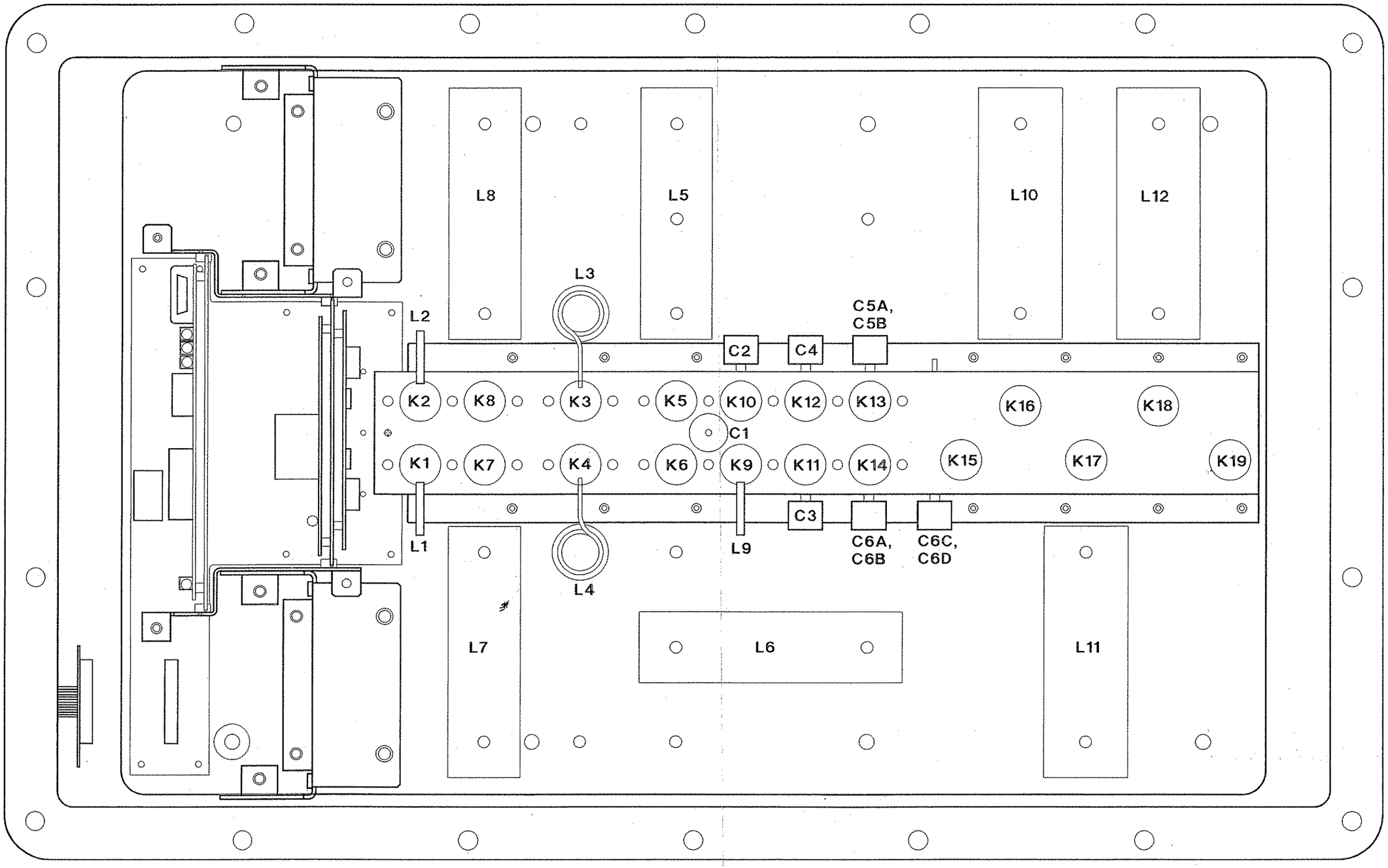

Figure 5.1.3 1A1 Chassis Component Locations.

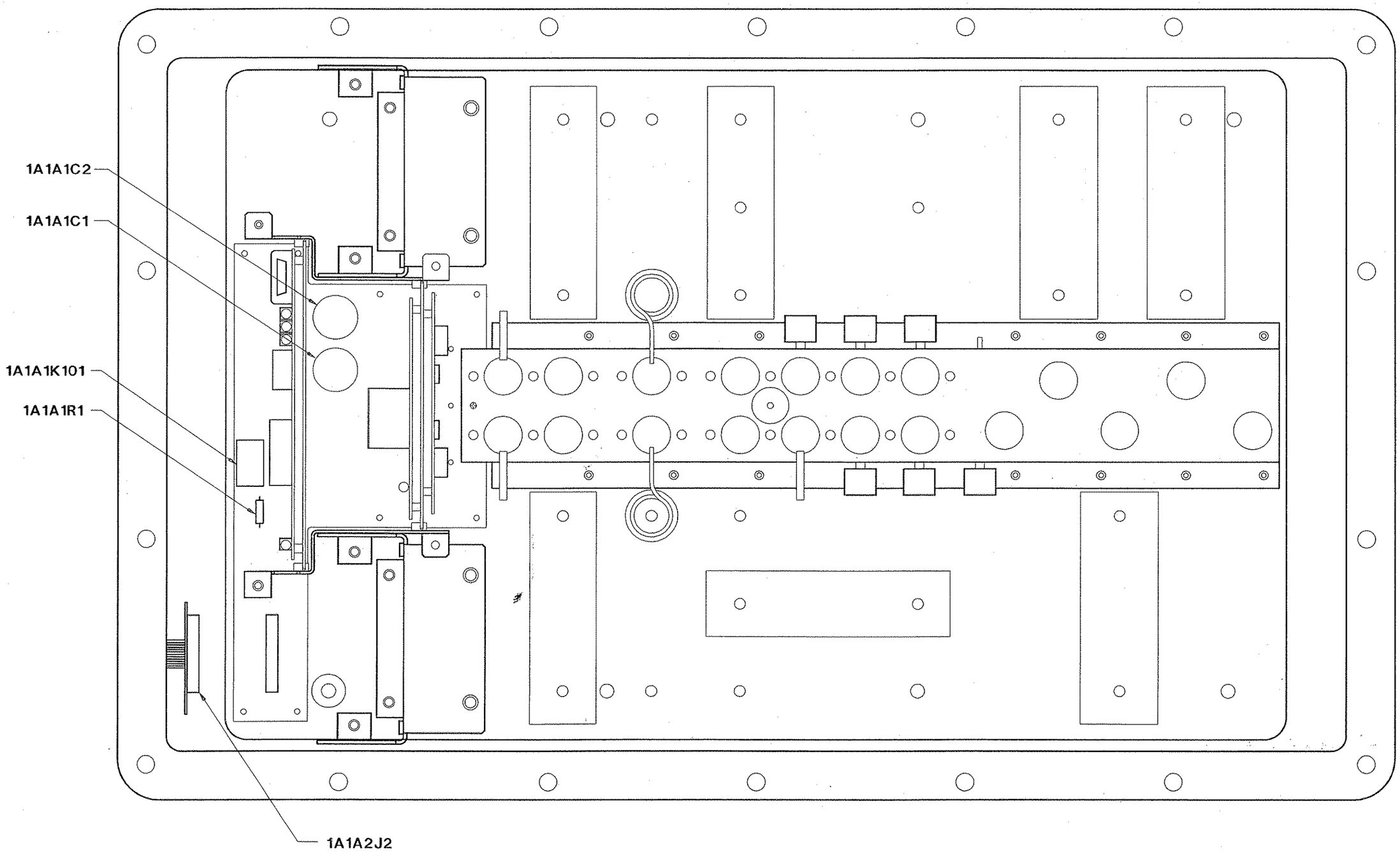

Figure 5.1.4 Non-Chassis Component Locations.

THIS PAGE INTENTIONALLY LEFT BLANK

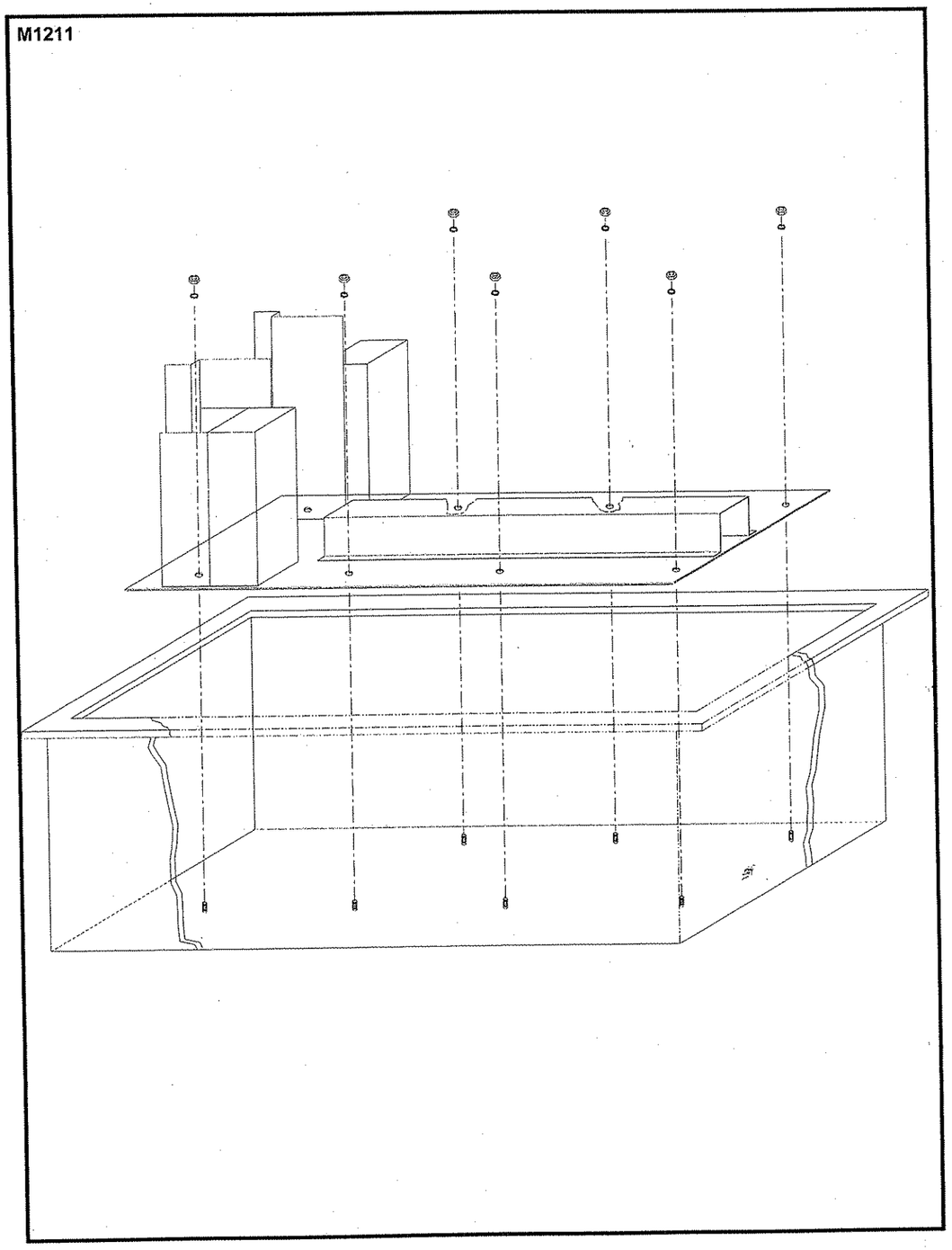

Figure 5.2.4.1 Chassis Removal.

P22211

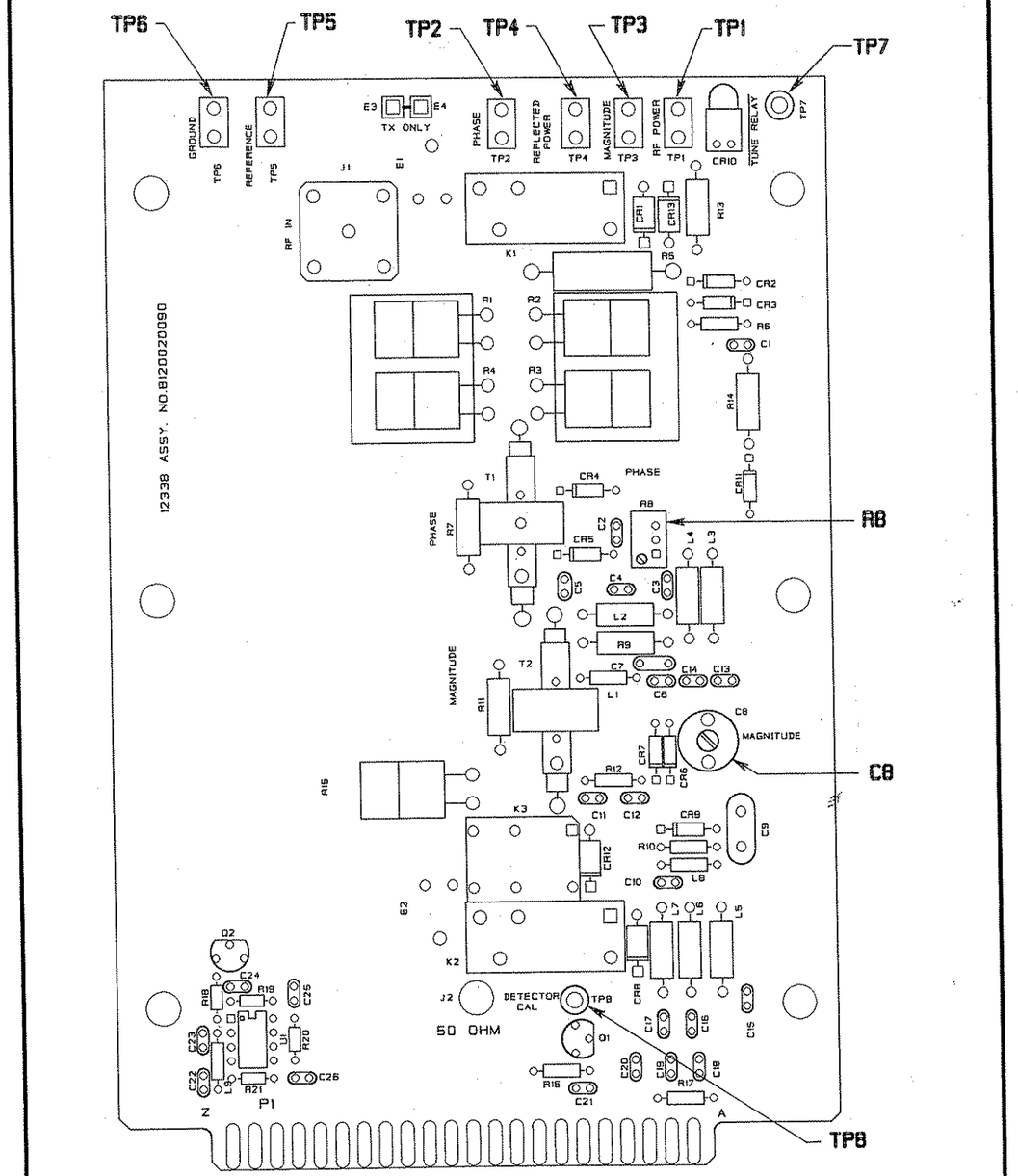

Figure 5.5.1 1A1A4A1 RF Detector Alignment Adjustment Locations.

CHASSIS ASSEMBLY 1A1

	CHASSIS ASSY,KW CPLR	**8120010094**
C1	CAPACITOR,15 PF	1013220021
C2	CAP. 25PF, 7.5KV, NPO	0290320003
C3	CAP. 50PF, 7.5KV, NPO	0290200008
C4	CAPACITOR,100 PF,7.5 KV NPO	1012740030
C5A	CAPACITOR,100 PF,7.5 KV NPO	1012740030
C5B	CAPACITOR,100 PF,7.5 KV NPO	1012740030
C6A	CAPACITOR,100 PF,7.5 KV NPO	1012740030
C6B	CAPACITOR,100 PF,7.5 KV NPO	1012740030
C6C	CAPACITOR,100 PF,7.5 KV NPO	1012740030
C6D	CAPACITOR,100 PF,7.5 KV NPO	1012740030
K1	RELAY, VACUUM, K44P334	1013210026
K2	RELAY, VACUUM, K44P334	1013210026
K3	RELAY, VACUUM, K44P334	1013210026
K4	RELAY, VACUUM, K44P334	1013210026
K5	RELAY, VACUUM, K44P334	1013210026
K6	RELAY, VACUUM, K44P334	1013210026
K7	RELAY, VACUUM, K44P334	1013210026
K8	RELAY, VACUUM, K44P334	1013210026
K9	RELAY, VACUUM, K44P334	1013210026
K10	RELAY, VACUUM, K44P334	1013210026
K11	RELAY, VACUUM, K44P334	1013210026
K12	RELAY, VACUUM, K44P334	1013210026
K13	RELAY, VACUUM, K44P334	1013210026
K14	RELAY, VACUUM, K44P334	1013210026
K15	RELAY, VACUUM, KC-12	1013200021
K16	RELAY, VACUUM, KC-12	1013200021
K17	RELAY, VACUUM, KC-12	1013200021
K18	RELAY, VACUUM, KC-12	1013200021
K19	RELAY, VACUUM, KC-12	1013200021
L1	INDUCTOR, 0.05 UHY	8120013204
L2	INDUCTOR, 0.1 UHY	8120013701
L3	INDUCTOR, 0.2 UHY	8120018095
L4	INDUCTOR, 0.4 UHY	8120017099
L5	INDUCTOR ASSY, 0.8 UHY	8120016092
L6	INDUCTOR ASSY, 1.6 UHY	8120015096
L7	INDUCTOR ASSY, 3.2 UHY	8120014090
L8	INDUCTOR ASSY, 6.4 UHY	8120013093
L9	INDUCTOR, 0.025 UHY	8120012704
L10	INDUCTOR ASSY, 12.6 UHY	8120012097
L11	INDUCTOR ASSY, 25.2 UHY	8120011091
L12	INDUCTOR ASSY, 25.2 UHY	8120011091
	LUG, SOLDER, PLAIN .625 ID	0501830006
	VALVE, BREATHER	1000090035
	SIGN, WARNING, RF RADIATION	1006240004
	COAX, SHIELDED, RG-142 B/U	1008460010
	CONNECTOR, RF, BNC, UG-913	1008460036
	CLIP, 34 PIN SOCKET RETAINER	1013430026
	INSULATOR, SLEEVE, RF	6029102303
	RING, RETAINER	6029102401
	WELDMENT, CASE, GRY	8092010412
	NAMEPLATE, CU-9150	8120003004
1A1A2	PC ASSY, INPUT CONNECTOR	8120019091
1A1A4A1	PC ASSY. RF DETECTOR	8120020090
1A1A3	PC ASSY, CPU	8120030095
	EPROM W/CU-9150 SOFTWARE U301	8120033299
1A1A4A2	PC ASSY, INPUT CAPACITOR	8120042093
FAN1	FAN, 24VDC, MUFFIN XL-DC	1009130005
FAN2	FAN, 24VDC, MUFFIN XL-DC	1009130005
	ROD, THD. 1/4-20,.875LG	1009280007
	CAP. 0.1UF, 50V, X7R	1011180014
	STRAP, COPPER, 1/2W, .030 THK	1012730034
	TERMINAL, RING, FOR 1/4 STUD	1012790037
	STANDOFF, F-F, 6-32 .690 L	6035142109
	STANDOFF, F-F, 1/4-20, 3.19 L	8092016500
	BRACKET FAN	8120012577
	BRACKET, PC ASSY, LEFT	8120013506
	BRACKET,PC ASSY, RIGHT	8120013603
	PLATE, CHASSIS	8120015207
	GROUND BAR, CHASSIS	8120015304
	BRACKET, RELAY MOUNTING	8120015401
	STANDOFF,COIL MOUNT	8120016505
1A1A1	PC ASSY, MOTHER BOARD	8120050096

FINAL ASSEMBLY TESTED CU-9150

	FINAL ASSY,TESTED,GRAY CU-9150	**8120001257**
	WASHER, SPLIT #6	0500040001
	WASHER, SPLIT #10	0500070008
	WASHER, FLAT #10 .500 OD	0500220000
	WASHER, FLAT .250 ID .500 OD	0500330000
	SCREW, PH 6-32 X 5/16 LG.	0500890056
	SCREW, PH 10-32 X 1 LG.	0500940169
	CAPLUG NO. EC-10	0508270006
	CAPLUG NO. EC-28	0508740002
	WASHER, SPLIT 1/4	0538370009
	LABEL, WARNING, HI-VOLTAGE	1003030009
	CORD, O-RING, .210 DIA NEOPR	1006990038
	SCREW, 1/4-20 X 5/8, PHIL	1013400020
	COVER, ANTENNA COUPLER, GRY	8104010514
	GASKET,FLAT,WELDMENT,CASE	8120001265
	FINAL ASSY, GRAY, CU-9150	8120001354
	PROTECTIVE COVER, CLEAR	8120018109
	INNER COVER	8120018206
1A1	CHASSIS ASSY, KW CPLR	8120010094

LONG WIRE ADAPTER KIT 1A1A5

	ADAPTER KIT, LONG-WIRE ANTENNA	**8120909003**
	CAP. 100PF, 15KV, N750	0275470008
	WASHER, SPLIT #10	0500070008
	WASHER, FLAT #10 .500 OD	0500220000
	SCREW, HEX HD 10-32 X 7/16 LG.	0526570075
	BAG, PLASTIC 3 X 5 X 4MZ DNP	0841251011
	PLATE, CAPACITOR MTG., ANT.	8092012806
	PLATE, CAPACITOR MTG., NTWK.	8092012903
	WHIP/LONG-WIRE ID PLATE	8120909011

Figure 5.8.1 Final Assembly Tested CU-9150, Chassis Assembly 1A1 and Long Wire Adapter Kit 1A1A5, page 1/3.

P2203B

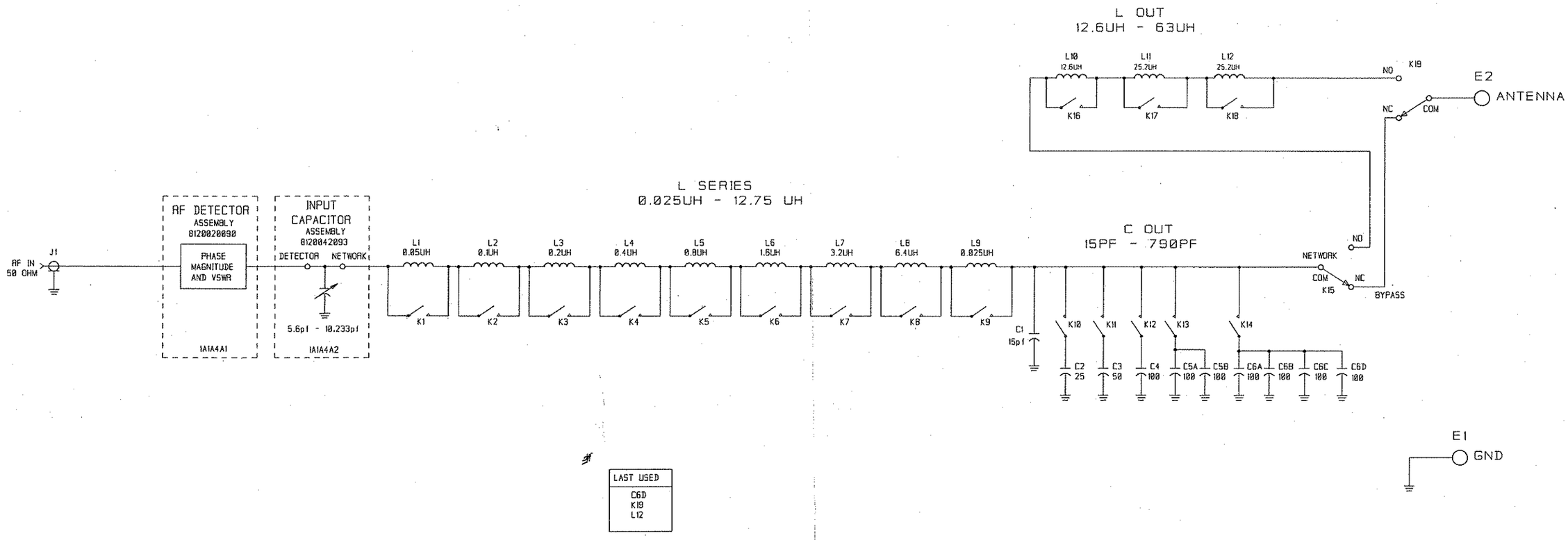

Figure 5.8.1 Final Assembly Tested CU-9150, Chassis Assembly 1A1 and Long Wire Adapter Kit 1A1A5, page 2/3.

P2223A

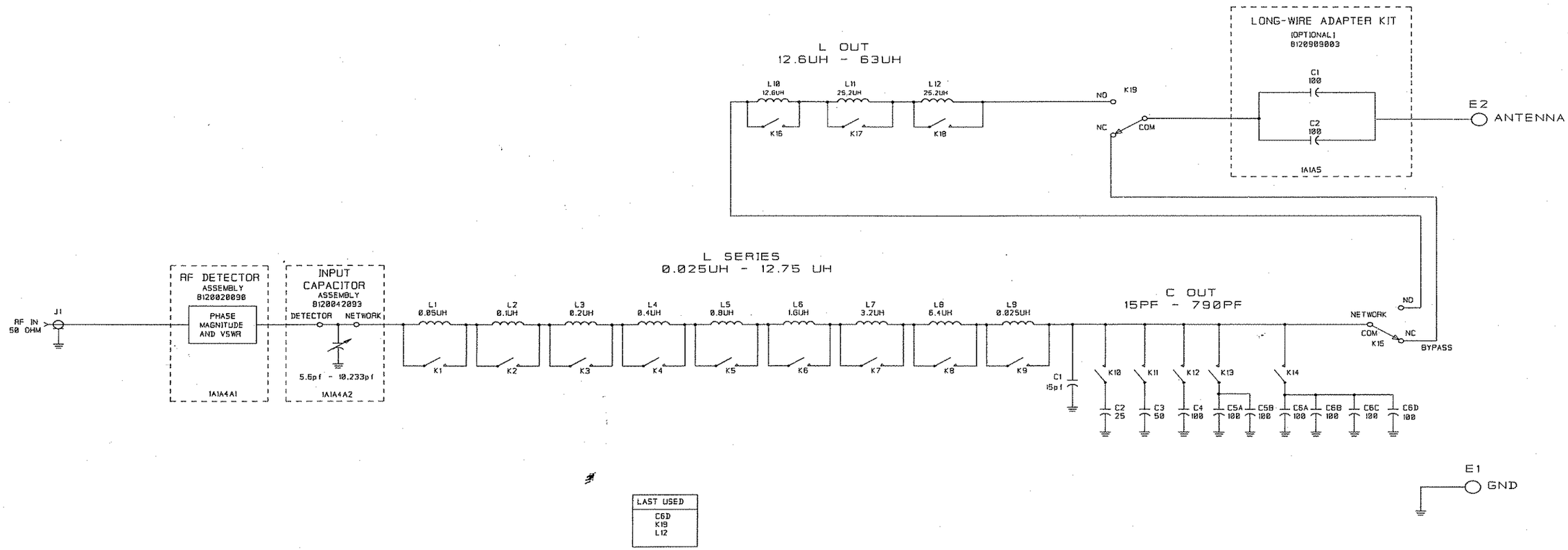

Figure 5.8.1 Final Assembly Tested CU-9150, Chassis Assembly 1A1 and Long Wire Adapter Kit 1A1A5, page 3/3.

PCASSEMBLY, CU-9150 MOTHERBOARD, 1A1A1

	PC ASSY, MOTHER BOARD	**8120050096**
C1	CAP. 6800UF, 63V, 105C	1010800019
C2	CAP. 6800UF, 63V, 105C	1010800019
C3	CAP. 0.1UF, 50V, X7R	1011180014
C4	CAP. 0.1UF, 50V, X7R	1011180014
C5	CAP. 0.01UF, 50V, X7R, 20%	0281730008
C6	CAP. 0.01UF, 50V, X7R, 20%	0281730008
C7	CAP. 0.01UF, 50V, X7R, 20%	0281730008
C8	CAP. 0.01UF, 50V, X7R, 20%	0281730008
J1	CONNECTOR, PCB, 100 PIN	1013190025
J2	CONNECTOR, PC, 22PIN DUAL,FEM	1008830003
J3	CONNECTOR, PC, 22PIN DUAL,FEM	1008830003
K101	RELAY, SPST, 24VDC, PC MOUNT	1010310038
P1	CONNECTOR, RIBBON, 34 PIN, FEM	1012090035
R1	RESISTOR 3, 5%, 3W	1004600003
XP1	CONNECTOR, TRANSITION, 34PIN	1012040038
	CABLE, RIBBON, 34 COND. 28AWG	1011900025

Figure 5.8.2 PC Assembly, CU-9150 Motherboard, 1A1A1, page 1/4.

B1P2196B

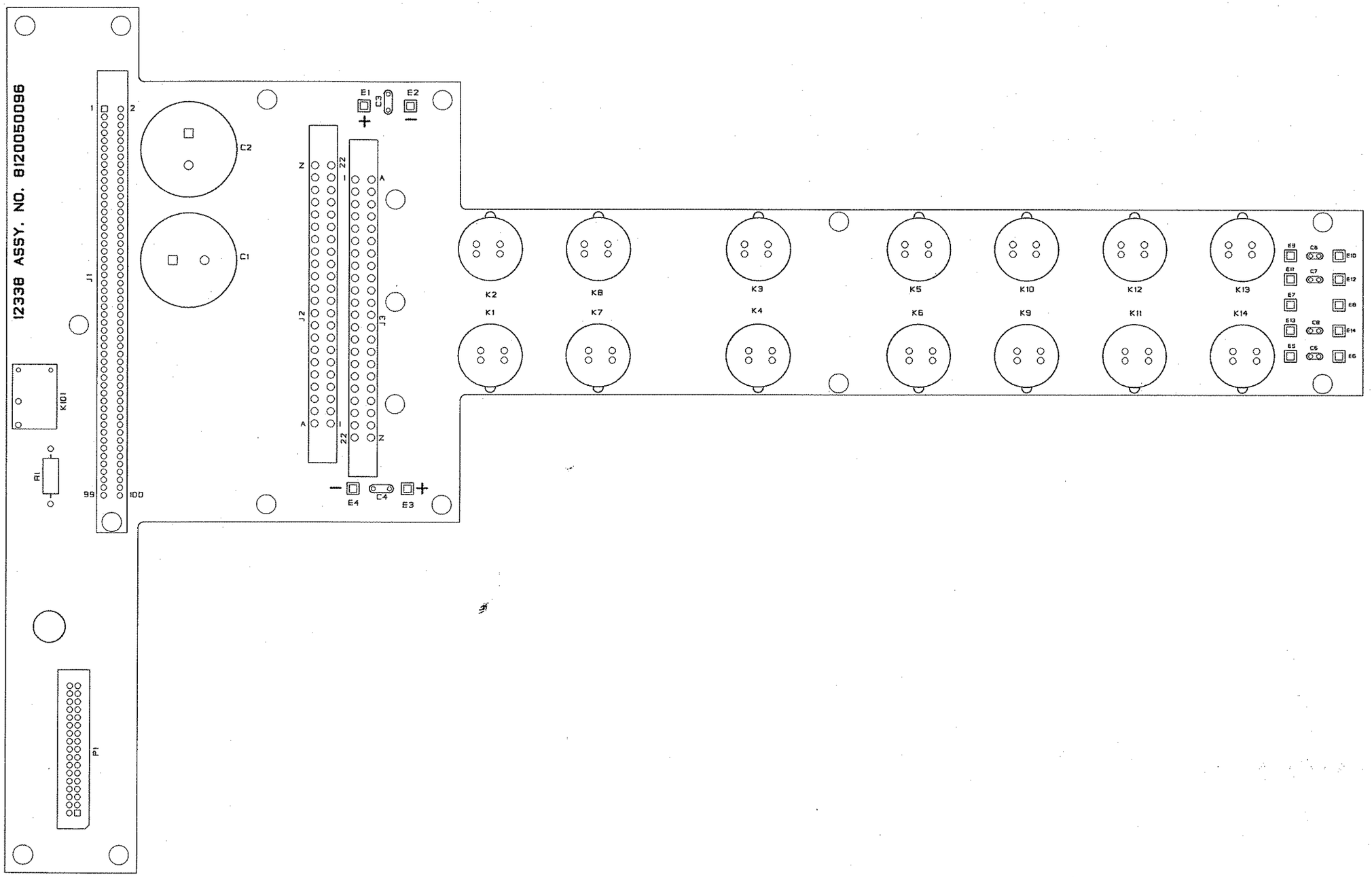

Figure 5.8.2 PC Assembly, CU-9150 Motherboard, 1A1A1, page 2/4.

P2196CA

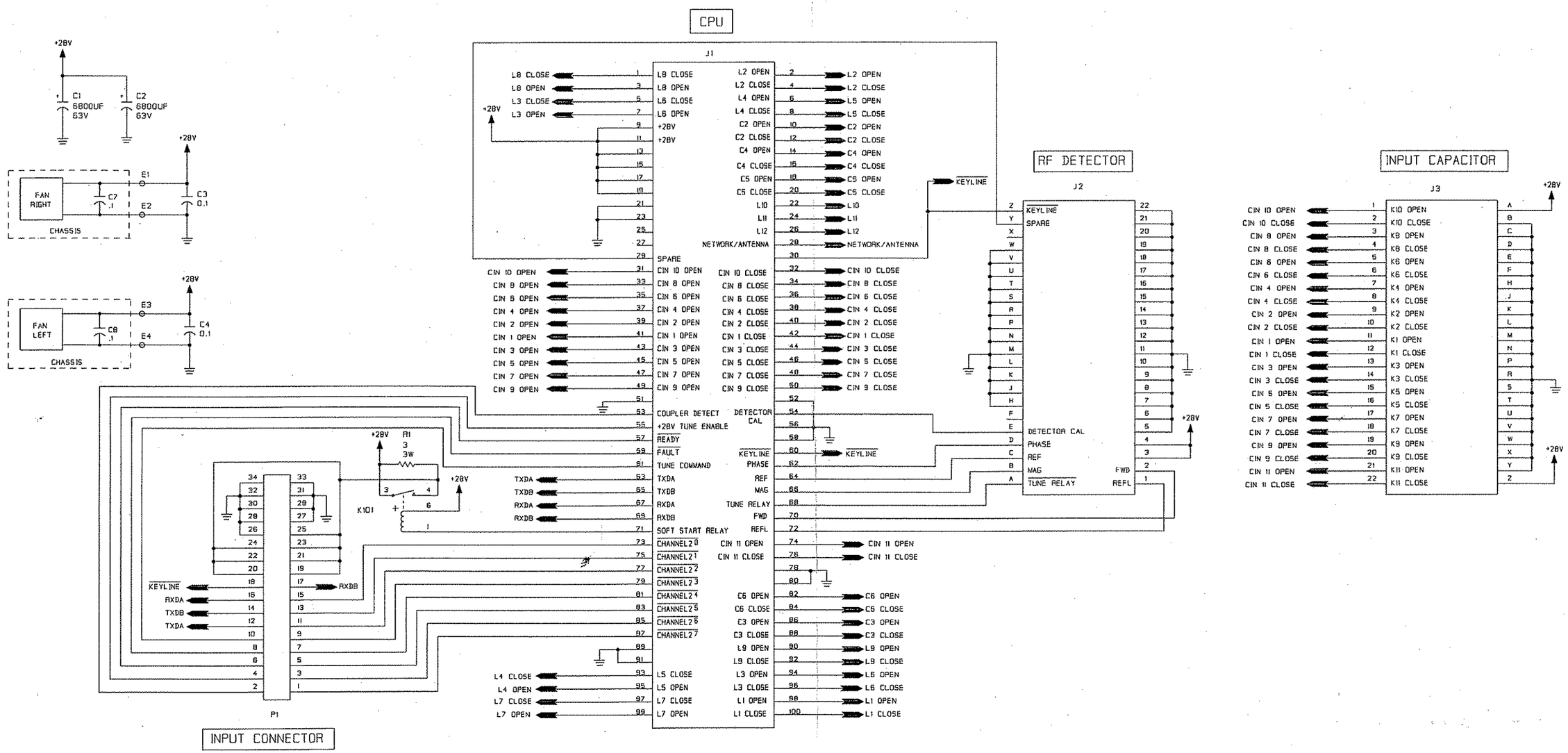

Figure 5.8.2 PC Assembly, CU-9150 Motherboard, 1A1A1, page 3/4.

P2196CB

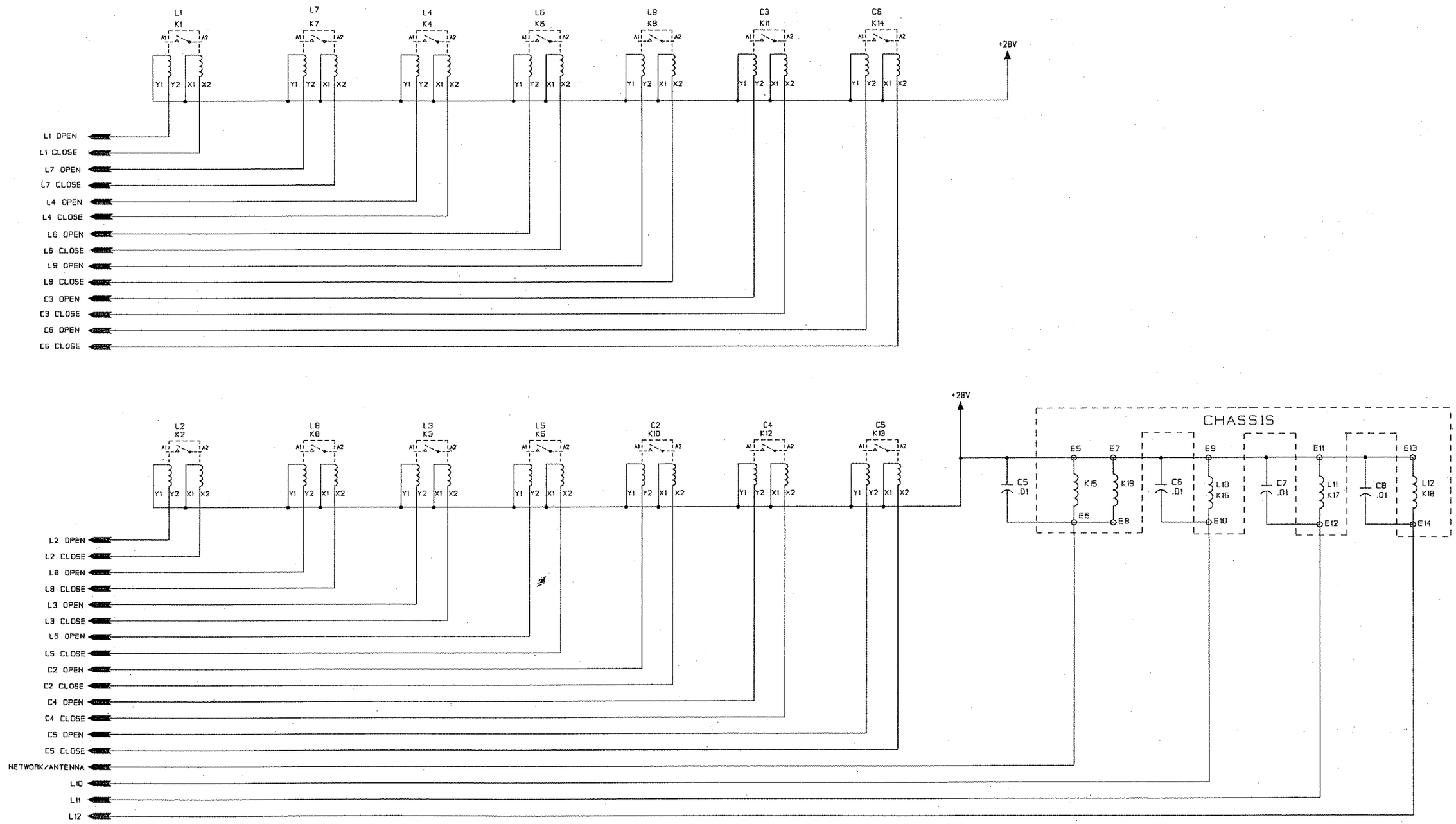

Figure 5.8.2 PC Assembly, CU-9150 Motherboard, 1A1A1, page 4/4.

B1P2202B

PC ASSEMBLY, INPUT CONNECTOR, 1A1A2

	PC ASSY, INPUT CONNECTOR	**8120019091**
C1	CAP 0.1UF, 50V, X7R, 20%	0281610002
C2	CAP 0.1UF, 50V, X7R, 20%	0281610002
C3	CAP 0.1UF, 50V, X7R, 20%	0281610002
C4	CAP 0.1UF, 50V, X7R, 20%	0281610002
C5	CAP 0.1UF, 50V, X7R, 20%	0281610002
C6	CAP 0.1UF, 50V, X7R, 20%	0281610002
C7	CAP 0.1UF, 50V, X7R, 20%	0281610002
C8	CAP 0.1UF, 50V, X7R, 20%	0281610002
C9	CAP 0.1UF, 50V, X7R, 20%	0281610002
C10	CAP 0.1UF, 50V, X7R, 20%	0281610002
C11	CAP 0.1UF, 50V, X7R, 20%	0281610002
C12	CAP 0.1UF, 50V, X7R, 20%	0281610002
C13	CAP 0.1UF, 50V, X7R, 20%	0281610002
C14	CAP 0.1UF, 50V, X7R, 20%	0281610002
C15	CAP 0.1UF, 50V, X7R, 20%	0281610002
J1	CONNECTOR, POWER, 37 PIN ROUND	1009330004
J2	CONNECTOR, HEADER, 34 PIN MALE	1011880024
L1	INDUCTOR, MOLDED, 22UH, 10%	0664060005
L2	INDUCTOR, MOLDED, 22UH, 10%	0664060005
L3	INDUCTOR, MOLDED, 22UH, 10%	0664060005
L4	INDUCTOR, MOLDED, 22UH, 10%	0664060005
L5	INDUCTOR, MOLDED, 22UH, 10%	0664060005
L6	INDUCTOR, MOLDED, 22UH, 10%	0664060005
L7	INDUCTOR, MOLDED, 22UH, 10%	0664060005
L8	INDUCTOR, MOLDED, 22UH, 10%	0664060005
L9	INDUCTOR, MOLDED, 22UH, 10%	0664060005
L10	INDUCTOR, MOLDED, 22UH, 10%	0664060005
L11	INDUCTOR, MOLDED, 22UH, 10%	0664060005
L12	INDUCTOR, MOLDED, 22UH, 10%	0664060005
L13	INDUCTOR, MOLDED, 22UH, 10%	0664060005
L14	INDUCTOR, MOLDED, 22UH, 10%	0664060005
L15	INDUCTOR, MOLDED, 22UH, 10%	0664060005
L16	INDUCTOR, MOLDED, 22UH, 10%	0664060005
L17	INDUCTOR, MOLDED, 22UH, 10%	0664060005
L18	INDUCTOR, MOLDED, 22UH, 10%	0664060005
L19	INDUCTOR, MOLDED, 22UH, 10%	0664060005
L20	INDUCTOR, MOLDED, 22UH, 10%	0664060005
L21	INDUCTOR, MOLDED, 22UH, 10%	0664060005
L22	INDUCTOR, MOLDED, 22UH, 10%	0664060005
L23	INDUCTOR, MOLDED, 22UH, 10%	0664060005
L24	INDUCTOR, MOLDED, 22UH, 10%	0664060005
L25	INDUCTOR, MOLDED, 22UH, 10%	0664060005
L26	INDUCTOR, MOLDED, 22UH, 10%	0664060005
L27	INDUCTOR, MOLDED, 22UH, 10%	0664060005
L28	INDUCTOR, MOLDED, 22UH, 10%	0664060005
L29	INDUCTOR, MOLDED, 6.8UH, 10%	0652200001
L30	INDUCTOR, MOLDED, 6.8UH, 10%	0652200001
L31	INDUCTOR, MOLDED, 6.8UH, 10%	0652200001
L32	INDUCTOR, MOLDED, 6.8UH, 10%	0652200001
ZS1	VARISTOR, V56RA8	1013360028
ZS2	VARISTOR, V56RA8	1013360028
ZS3	VARISTOR, V56RA8	1013360028
ZS4	VARISTOR, V56RA8	1013360028
ZS5	VARISTOR, V56RA8	1013360028
ZS6	VARISTOR, V56RA8	1013360028
ZS7	VARISTOR, V56RA8	1013360028
ZS8	VARISTOR, V56RA8	1013360028
ZS9	VARISTOR, V56RA8	1013360028
ZS10	VARISTOR, V56RA8	1013360028
ZS11	VARISTOR, V56RA8	1013360028
ZS12	VARISTOR, V56RA8	1013360028

ZS13	VARISTOR, V56RA8	1013360028
ZS14	VARISTOR, V56RA8	1013360028
ZS15	VARISTOR, V56RA8	1013360028
	WASHER, SPLIT #6	0500040001
	WASHER, FLAT #6 .312 OD	0500200009
	SCREW, PH 6-32 X 1/4 LG.	0500890048
	SCREW, PH 6-32 X 3/8 LG.	0500890064
	STANDOFF, M-F, 6-32 .375 L	0542930005

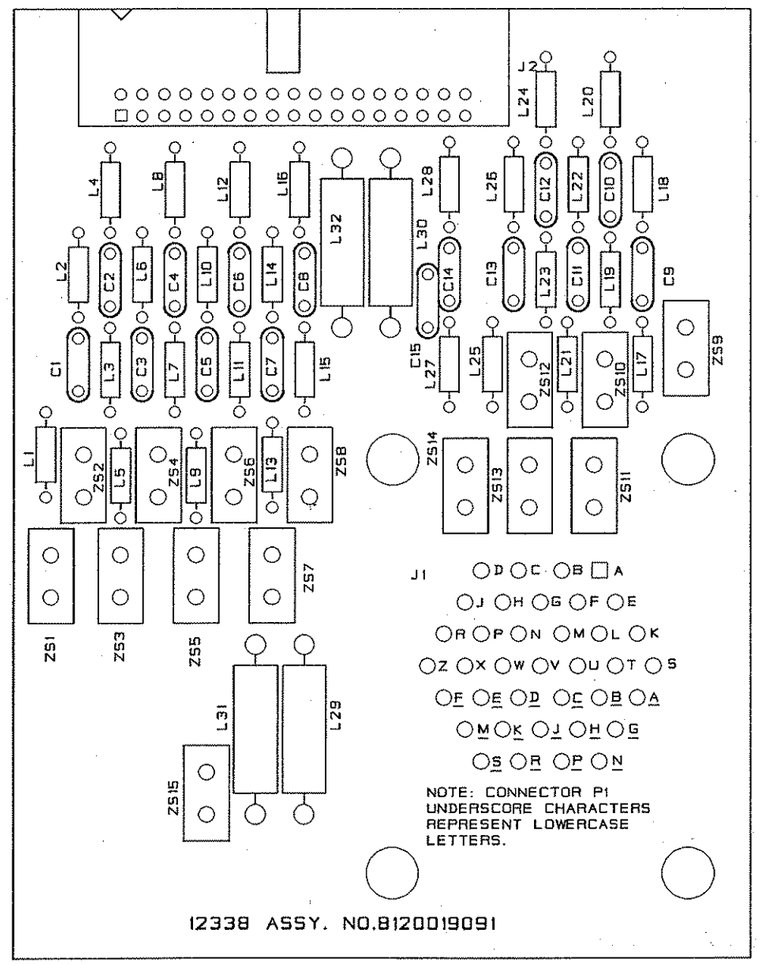

Figure 5.8.3 PC Assembly, Input Connector, 1A1A2, page 1/2.

P2202A

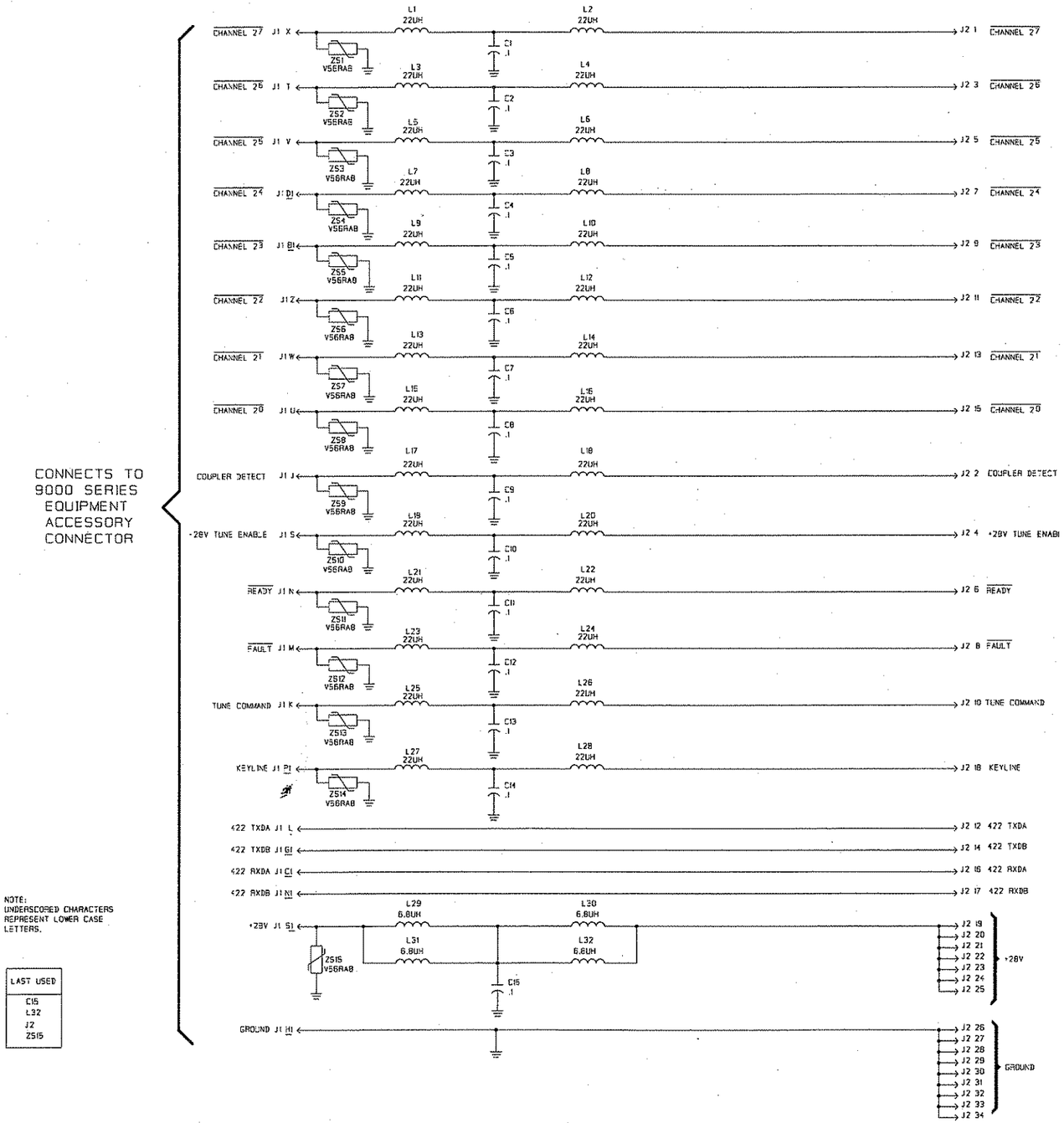

NOTE:
UNDERSCORED CHARACTERS REPRESENT LOWER CASE LETTERS.

LAST USED
C15
L32
J2
ZS15

Figure 5.8.3 PC Assembly, Input Connector, 1A1A2, page 2/2.

PC ASSEMBLY, CPU, 1A1A3

	PC ASSY, CPU	**8120030095**
C101	CAP. 10UF, 20V	1007290005
C102	CAP. 0.1UF, 50V, X7R	1011180014
C103	CAP. 1UF, 35V	0281660000
C104	CAP. 0.01UF, 50V, X7R, 20%	0281730008
C105	CAP. 0.01UF, 50V, X7R, 20%	0281730008
C106	CAP. 0.01UF, 50V, X7R, 20%	0281730008
C107	CAP. 0.01UF, 50V, X7R, 20%	0281730008
C108	CAP. 0.01UF, 50V, X7R, 20%	0281730008
C109	CAP. 0.01UF, 50V, X7R, 20%	0281730008
C110	CAP. 0.01UF, 50V, X7R, 20%	0281730008
C111	CAP. 0.01UF, 50V, X7R, 20%	0281730008
C112	CAP. 0.01UF, 50V, X7R, 20%	0281730008
C113	CAP. 0.01UF, 50V, X7R, 20%	0281730008
C114	CAP. 0.01UF, 50V, X7R, 20%	0281730008
C115	CAP. 0.01UF, 50V, X7R, 20%	0281730008
C116	CAP. 22PF, 200V, NPO, 5%	1012902200
C117	CAP. 22PF, 200V, NPO, 5%	1012902200
C118	CAP. 0.01UF, 50V, X7R, 20%	0281730008
C119	CAP. 0.01UF, 50V, X7R, 20%	0281730008
C120	CAP. 0.01UF, 50V, X7R, 20%	0281730008
C121	CAP. 0.01UF, 50V, X7R, 20%	0281730008
C122	CAP. 0.01UF, 50V, X7R, 20%	0281730008
C123	CAP. 1UF, 35V	0281660000
C124	CAP. 0.01UF, 50V, X7R, 20%	0281730008
C201	CAP. 0.1UF, 50V, X7R	1011180014
C205	CAP. 0.01UF, 50V, X7R, 20%	0281730008
C206	CAP. 0.01UF, 50V, X7R, 20%	0281730008
C207	CAP. 0.01UF, 50V, X7R, 20%	0281730008
C208	CAP. 0.01UF, 50V, X7R, 20%	0281730008
C209	CAP. 0.01UF, 50V, X7R, 20%	0281730008
C210	CAP. 0.01UF, 50V, X7R, 20%	0281730008
C211	CAP. 0.01UF, 50V, X7R, 20%	0281730008
C212	CAP. 0.01UF, 50V, X7R, 20%	0281730008
C213	CAP. 0.01UF, 50V, X7R, 20%	0281730008
C214	CAP. 6.8UF, 20V	0296780006
C215	CAP. 0.01UF, 50V, X7R, 20%	0281730008
C217	CAP. 0.1UF, 50V, X7R	1011180014
C218	CAP. 0.01UF, 50V, X7R, 20%	0281730008
C219	CAP. 22UF, 15V	0281690006
C220	CAP. 0.01UF, 50V, X7R, 20%	0281730008
C301	CAP. 0.01UF, 50V, X7R, 20%	0281730008
C302	CAP. 10UF, 20V	1007290005
C303	CAP. 0.01UF, 50V, X7R, 20%	0281730008
C304	CAP. 0.01UF, 50V, X7R, 20%	0281730008
C305	CAP. 0.01UF, 50V, X7R, 20%	0281730008
C306	CAP. 0.01UF, 50V, X7R, 20%	0281730008
C307	CAP. 0.01UF, 50V, X7R, 20%	0281730008
C308	CAP. 0.01UF, 50V, X7R, 20%	0281730008
C309	CAP. 0.01UF, 50V, X7R, 20%	0281730008
C310	CAP. 0.01UF, 50V, X7R, 20%	0281730008
C311	CAP. 0.01UF, 50V, X7R, 20%	0281730008
C312	CAP. 0.01UF, 50V, X7R, 20%	0281730008
C313	CAP. 0.1UF, 50V, X7R	1011180014
C401	CAP. 0.01UF, 50V, X7R, 20%	0281730008
C402	CAP. 0.01UF, 50V, X7R, 20%	0281730008
C403	CAP. 0.01UF, 50V, X7R, 20%	0281730008
C404	CAP. 0.01UF, 50V, X7R, 20%	0281730008
C405	CAP. 0.01UF, 50V, X7R, 20%	0281730008
C406	CAP. 0.01UF, 50V, X7R, 20%	0281730008
C407	CAP. 0.01UF, 50V, X7R, 20%	0281730008
C408	CAP. 0.01UF, 50V, X7R, 20%	0281730008
C409	CAP. 0.01UF, 50V, X7R, 20%	0281730008
C410	CAP. 0.01UF, 50V, X7R, 20%	0281730008
C411	CAP. 0.01UF, 50V, X7R, 20%	0281730008
C412	CAP. 0.01UF, 50V, X7R, 20%	0281730008
C413	CAP. 0.01UF, 50V, X7R, 20%	0281730008
C414	CAP. 0.01UF, 50V, X7R, 20%	0281730008
C415	CAP. 0.01UF, 50V, X7R, 20%	0281730008
C416	CAP. 0.01UF, 50V, X7R, 20%	0281730008
C417	CAP. 0.01UF, 50V, X7R, 20%	0281730008
C418	CAP. 0.01UF, 50V, X7R, 20%	0281730008
C419	CAP. 0.01UF, 50V, X7R, 20%	0281730008
C420	CAP. 0.01UF, 50V, X7R, 20%	0281730008
C421	CAP. 0.01UF, 50V, X7R, 20%	0281730008
C422	CAP. 0.01UF, 50V, X7R, 20%	0281730008
C423	CAP. 0.01UF, 50V, X7R, 20%	0281730008
C424	CAP. 0.01UF, 50V, X7R, 20%	0281730008
C425	CAP. 0.01UF, 50V, X7R, 20%	0281730008
C426	CAP. 0.01UF, 50V, X7R, 20%	0281730008
C427	CAP. 0.01UF, 50V, X7R, 20%	0281730008
C428	CAP. 0.01UF, 50V, X7R, 20%	0281730008
C429	CAP. 0.01UF, 50V, X7R, 20%	0281730008
C430	CAP. 0.01UF, 50V, X7R, 20%	0281730008
C431	CAP. 0.01UF, 50V, X7R, 20%	0281730008
C432	CAP. 0.01UF, 50V, X7R, 20%	0281730008
C433	CAP. 0.01UF, 50V, X7R, 20%	0281730008
C434	CAP. 0.01UF, 50V, X7R, 20%	0281730008
C435	CAP. 0.01UF, 50V, X7R, 20%	0281730008
C436	CAP. 0.01UF, 50V, X7R, 20%	0281730008
C437	CAP. 0.01UF, 50V, X7R, 20%	0281730008
C438	CAP. 0.01UF, 50V, X7R, 20%	0281730008
C439	CAP. 0.01UF, 50V, X7R, 20%	0281730008
C440	CAP. 0.01UF, 50V, X7R, 20%	0281730008
C441	CAP. 0.01UF, 50V, X7R, 20%	0281730008
C442	CAP. 0.01UF, 50V, X7R, 20%	0281730008
C443	CAP. 0.01UF, 50V, X7R, 20%	0281730008
C444	CAP. 0.01UF, 50V, X7R, 20%	0281730008
C445	CAP. 0.01UF, 50V, X7R, 20%	0281730008
C446	CAP. 0.01UF, 50V, X7R, 20%	0281730008
C447	CAP. 0.01UF, 50V, X7R, 20%	0281730008
C448	CAP. 0.01UF, 50V, X7R, 20%	0281730008
C449	CAP. 0.01UF, 50V, X7R, 20%	0281730008
C450	CAP. 0.01UF, 50V, X7R, 20%	0281730008
C451	CAP. 0.01UF, 50V, X7R, 20%	0281730008
C452	CAP. 0.01UF, 50V, X7R, 20%	0281730008
C453	CAP. 0.01UF, 50V, X7R, 20%	0281730008
C454	CAP. 0.01UF, 50V, X7R, 20%	0281730008
C455	CAP. 0.01UF, 50V, X7R, 20%	0281730008
C456	CAP. 0.01UF, 50V, X7R, 20%	0281730008
C457	CAP. 0.01UF, 50V, X7R, 20%	0281730008
C458	CAP. 0.01UF, 50V, X7R, 20%	0281730008
C459	CAP. 0.01UF, 50V, X7R, 20%	0281730008
C501	CAP. 0.01UF, 50V, X7R, 20%	0281730008
C502	CAP. 0.01UF, 50V, X7R, 20%	0281730008
C503	CAP. 0.01UF, 50V, X7R, 20%	0281730008
C504	CAP. 0.01UF, 50V, X7R, 20%	0281730008
C505	CAP. 0.01UF, 50V, X7R, 20%	0281730008
C506	CAP. 0.01UF, 50V, X7R, 20%	0281730008
C507	CAP. 0.01UF, 50V, X7R, 20%	0281730008
C508	CAP. 0.01UF, 50V, X7R, 20%	0281730008
C509	CAP. 0.01UF, 50V, X7R, 20%	0281730008
C510	CAP. 0.01UF, 50V, X7R, 20%	0281730008
C511	CAP. 0.01UF, 50V, X7R, 20%	0281730008
C512	CAP. 0.01UF, 50V, X7R, 20%	0281730008
C513	CAP. 0.01UF, 50V, X7R, 20%	0281730008
C514	CAP. 0.01UF, 50V, X7R, 20%	0281730008
C515	CAP. 0.01UF, 50V, X7R, 20%	0281730008
C516	CAP. 0.01UF, 50V, X7R, 20%	0281730008
C517	CAP. 0.01UF, 50V, X7R, 20%	0281730008
C518	CAP. 0.01UF, 50V, X7R, 20%	0281730008
C519	CAP. 0.01UF, 50V, X7R, 20%	0281730008
C520	CAP. 0.01UF, 50V, X7R, 20%	0281730008
C521	CAP. 0.01UF, 50V, X7R, 20%	0281730008
C522	CAP. 0.01UF, 50V, X7R, 20%	0281730008
C523	CAP. 0.01UF, 50V, X7R, 20%	0281730008
C524	CAP. 0.01UF, 50V, X7R, 20%	0281730008
C525	CAP. 0.01UF, 50V, X7R, 20%	0281730008
C526	CAP. 0.01UF, 50V, X7R, 20%	0281730008
C527	CAP. 0.01UF, 50V, X7R, 20%	0281730008
C528	CAP. 0.01UF, 50V, X7R, 20%	0281730008
C529	CAP. 0.01UF, 50V, X7R, 20%	0281730008
C530	CAP. 0.01UF, 50V, X7R, 20%	0281730008
C531	CAP. 0.01UF, 50V, X7R, 20%	0281730008
C532	CAP. 0.01UF, 50V, X7R, 20%	0281730008
C533	CAP. 0.01UF, 50V, X7R, 20%	0281730008
C534	CAP. 0.01UF, 50V, X7R, 20%	0281730008
C535	CAP. 0.01UF, 50V, X7R, 20%	0281730008
C536	CAP. 0.01UF, 50V, X7R, 20%	0281730008
C537	CAP. 0.01UF, 50V, X7R, 20%	0281730008
C538	CAP. 0.01UF, 50V, X7R, 20%	0281730008
C539	CAP. 0.01UF, 50V, X7R, 20%	0281730008
C540	CAP. 0.01UF, 50V, X7R, 20%	0281730008
C541	CAP. 0.1UF, 50V, X7R	1011180014
C542	CAP. 0.1UF, 50V, X7R	1011180014
C543	CAP. 0.1UF, 50V, X7R	1011180014
C544	CAP. 0.1UF, 50V, X7R	1011180014
C545	CAP. 0.01UF, 50V, X7R, 20%	0281730008
C546	CAP. 0.01UF, 50V, X7R, 20%	0281730008
C547	CAP. 0.01UF, 50V, X7R, 20%	0281730008
C548	CAP. 0.01UF, 50V, X7R, 20%	0281730008
C549	CAP. 0.01UF, 50V, X7R, 20%	0281730008
C550	CAP. 0.01UF, 50V, X7R, 20%	0281730008
C551	CAP. 0.01UF, 50V, X7R, 20%	0281730008
C552	CAP. 0.01UF, 50V, X7R, 20%	0281730008
C553	CAP. 0.01UF, 50V, X7R, 20%	0281730008
C554	CAP. 0.01UF, 50V, X7R, 20%	0281730008
C557	CAP. 0.01UF, 50V, X7R, 20%	0281730008
C558	CAP. 0.01UF, 50V, X7R, 20%	0281730008
C559	CAP. 0.01UF, 50V, X7R, 20%	0281730008
C560	CAP. 0.01UF, 50V, X7R, 20%	0281730008
C561	CAP. 0.01UF, 50V, X7R, 20%	0281730008
C562	CAP. 0.01UF, 50V, X7R, 20%	0281730008
C563	CAP. 0.01UF, 50V, X7R, 20%	0281730008
C564	CAP. 0.01UF, 50V, X7R, 20%	0281730008
C565	CAP. 0.01UF, 50V, X7R, 20%	0281730008
C566	CAP. 0.01UF, 50V, X7R, 20%	0281730008
C601	CAP. 1UF, 35V	0281660000
C602	CAP. 0.1UF, 50V, X7R	1011180014
C603	CAP. 0.01UF, 50V, X7R, 20%	0281730008
C604	CAP. 0.1UF, 50V, X7R	1011180014
C605	CAP. 6.8UF, 20V	0296780006
C606	CAP. 0.1UF, 50V, X7R	1011180014
C607	CAP. 0.01UF, 50V, X7R, 20%	0281730008
C608	CAP. 0.1UF, 50V, X7R	1011180014
C609	CAP. 0.01UF, 50V, X7R, 20%	0281730008
C610	CAP. 68UF, 15V	0296540005
C611	CAP. 0.01UF, 50V, X7R, 20%	0281730008
C612	CAP. 1000UF, 35V, 105C	1011420031
C613	CAP. 0.01UF, 50V, X7R, 20%	0281730008
C614	CAP. 0.01UF, 50V, X7R, 20%	0281730008
C616	CAP. 0.01UF, 50V, X7R, 20%	0281730008
C617	CAP. 0.01UF, 50V, X7R, 20%	0281730008
C618	CAP. 0.01UF, 50V, X7R, 20%	0281730008
C619	CAP. 0.01UF, 50V, X7R, 20%	0281730008
C620	CAP. 0.01UF, 50V, X7R, 20%	0281730008
C621	CAP. 0.01UF, 50V, X7R, 20%	0281730008
C622	CAP. 0.01UF, 50V, X7R, 20%	0281730008
C623	CAP. 0.01UF, 50V, X7R, 20%	0281730008
C624	CAP. 0.01UF, 50V, X7R, 20%	0281730008
C625	CAP. 0.01UF, 50V, X7R, 20%	0281730008
C626	CAP. 0.01UF, 50V, X7R, 20%	0281730008
C628	CAP. 0.01UF, 50V, X7R, 20%	0281730008
C629	CAP. 0.01UF, 50V, X7R, 20%	0281730008
C630	CAP. 0.01UF, 50V, X7R, 20%	0281730008
C631	CAP. 0.01UF, 50V, X7R, 20%	0281730008
C632	CAP. 0.01UF, 50V, X7R, 20%	0281730008
CP601	CAP. NTWK. 0.1UF, 10 PIN	1006580018
CP602	CAP. NTWK. 0.1UF, 10 PIN	1006580018
CR101	DIODE, SIGNAL, SIL. 1N4454	0405270003
CR201	DIODE, SIGNAL, SIL. 1N4454	0405270003
CR301	DIODE, LED, AMBER 550-2305	1011480000
CR302	DIODE, LED, GREEN 550-2205	1011030012
CR303	DIODE, LED, RED 550-2405	1008480029
CR304	DIODE, LED, RED 550-2405	1008480029
CR305	DIODE, SIGNAL, SIL. 1N4454	0405270003
CR401	DIODE, RECTIFIER 1N4004	0405180004
CR402	DIODE, RECTIFIER 1N4004	0405180004
CR403	DIODE, RECTIFIER 1N4004	0405180004
CR404	DIODE, RECTIFIER 1N4004	0405180004
CR501	DIODE, TRANSIENT SUP. 1.5KA18A	1010960032
CR502	DIODE, TRANSIENT SUP. 1.5KA18A	1010960032
CR503	DIODE, TRANSIENT SUP. 1.5KA18A	1010960032
CR504	DIODE, TRANSIENT SUP. 1.5KA18A	1010960032
CR601	DIODE, ZENER 1N5245B	0405210001
CR602	DIODE, ZENER 1N5343B	1003060005
J1	CONNECTOR, DB-9, FEMALE RT ANG	1012550028
L103	INDUCTOR, MOLDED, 8.2UH, 5%	0652060005
L104	INDUCTOR, MOLDED, 8.2UH, 5%	0652060005
L106	INDUCTOR, MOLDED, 47UH, 5%	0652680003
L201	INDUCTOR, MOLDED, 47UH, 5%	0652680003
L202	INDUCTOR, MOLDED, 47UH, 5%	0652680003
L203	INDUCTOR, MOLDED, 47UH, 5%	0652680003
L204	INDUCTOR, MOLDED, 47UH, 5%	0652680003
L301	INDUCTOR, MOLDED, 47UH, 5%	0652680003
L302	INDUCTOR, MOLDED, 47UH, 5%	0652680003
L303	INDUCTOR, MOLDED, 47UH, 5%	0652680003
L304	INDUCTOR, MOLDED, 47UH, 5%	0652680003
L305	INDUCTOR, MOLDED, 47UH, 5%	0652680003
L401	INDUCTOR, MOLDED, 2.7UH, 5%	0652180001
L402	INDUCTOR, MOLDED, 2.7UH, 5%	0652180001
L403	INDUCTOR, MOLDED, 2.7UH, 5%	0652180001
L404	INDUCTOR, MOLDED, 2.7UH, 5%	0652180001
L405	INDUCTOR, MOLDED, 2.7UH, 5%	0652180001
L406	INDUCTOR, MOLDED, 2.7UH, 5%	0652180001
L407	INDUCTOR, MOLDED, 2.7UH, 5%	0652180001
L408	INDUCTOR, MOLDED, 2.7UH, 5%	0652180001
L409	INDUCTOR, MOLDED, 2.7UH, 5%	0652180001

Figure 5.8.4 PC Assembly, CPU, 1A1A3, page 1/9.

L410	INDUCTOR, MOLDED, 2.7UH, 5%	0652180001
L411	INDUCTOR, MOLDED, 2.7UH, 5%	0652180001
L412	INDUCTOR, MOLDED, 2.7UH, 5%	0652180001
L413	INDUCTOR, MOLDED, 2.7UH, 5%	0652180001
L414	INDUCTOR, MOLDED, 2.7UH, 5%	0652180001
L415	INDUCTOR, MOLDED, 2.7UH, 5%	0652180001
L416	INDUCTOR, MOLDED, 2.7UH, 5%	0652180001
L417	INDUCTOR, MOLDED, 2.7UH, 5%	0652180001
L418	INDUCTOR, MOLDED, 2.7UH, 5%	0652180001
L419	INDUCTOR, MOLDED, 2.7UH, 5%	0652180001
L420	INDUCTOR, MOLDED, 2.7UH, 5%	0652180001
L421	INDUCTOR, MOLDED, 2.7UH, 5%	0652180001
L422	INDUCTOR, MOLDED, 2.7UH, 5%	0652180001
L423	INDUCTOR, MOLDED, 10UH, 5%	0650240006
L424	INDUCTOR, MOLDED, 10UH, 5%	0650240006
L425	INDUCTOR, MOLDED, 10UH, 5%	0650240006
L426	INDUCTOR, MOLDED, 10UH, 5%	0650240006
L601	INDUCTOR, MOLDED, 47UH, 5%	0652680003
L602	INDUCTOR, MOLDED, 47UH, 5%	0652680003
L603	INDUCTOR, MOLDED, 47UH, 5%	0652680003
L604	INDUCTOR, MOLDED, 47UH, 5%	0652680003
L605	INDUCTOR, MOLDED, 47UH, 5%	0652680003
L606	INDUCTOR, MOLDED, 47UH, 5%	0652680003
L607	INDUCTOR, MOLDED, 47UH, 5%	0652680003
L608	INDUCTOR, MOLDED, 47UH, 5%	0652680003
L609	INDUCTOR, MOLDED, 10UH, 5%	0650240006
Q101	TRANSISTOR, N-CH, FET 2N7000	1011050013
Q201	TRANSISTOR, N-CH, FET 2N7000	1011050013
Q301	TRANSISTOR, PNP, SI. 2N2907A	0448390001
Q302	TRANSISTOR, N-CH, FET 2N7000	1011050013
Q401	TRANSISTOR, N-CH, FET MTP3055E	1010750011
Q402	TRANSISTOR, N-CH, FET MTP3055E	1010750011
Q403	TRANSISTOR, N-CH, FET MTP3055E	1010750011
Q404	TRANSISTOR, N-CH, FET MTP3055E	1010750011
R101	RESISTOR 2.7K, 5%, 1/8W	1010802721
R102	RESISTOR 10K, 5%, 1/8W	1010801031
R103	RESISTOR 470, 5%, 1/8W	1010804715
R104	RESISTOR 47K, 5%, 1/8W	1010804731
R105	RESISTOR 4.7K, 5%, 1/8W	1010804723
R106	RESISTOR 0.0, 0%, 1/4W	1011600021
R107	RESISTOR 10K, 5%, 1/8W	1010801031
R108	RESISTOR 10K, 5%, 1/8W	1010801031
R109	RESISTOR 47K, 5%, 1/8W	1010804731
R110	RESISTOR 10K, 5%, 1/8W	1010801031
R112	RESISTOR 0.0, 0%, 1/4W	1011600021
R202	RESISTOR 10K, 5%, 1/8W	1010801031
R203	RESISTOR 10K, 5%, 1/8W	1010801031
R204	RESISTOR 47K, 5%, 1/8W	1010804731
R205	RESISTOR 4.7K, 5%, 1/8W	1010804723
R206	RESISTOR 47K, 5%, 1/8W	1010804731
R207	RESISTOR 10K, 5%, 1/8W	1010801031
R208	RESISTOR 47K, 5%, 1/8W	1010804731
R209	RESISTOR 10K, 5%, 1/8W	1010801031
R210	RESISTOR 10, 5%, 1/8W	1010801007
R211	RESISTOR 0.0, 0%, 1/4W	1011600021
R213	RESISTOR 22, 5%, 1/8W	1010802208
R214	RESISTOR 10, 5%, 1/8W	1010801007
R302	RESISTOR 0.0, 0%, 1/4W	1011600021
R304	RESISTOR 2.7K, 10%, 1/2W	0165780002
R305	RESISTOR PTC	1012680011
R306	RESISTOR 47K, 5%, 1/8W	1010804731
R307	RESISTOR PTC	1012680011

R308	RESISTOR 10K, 5%, 1/8W	1010801031
R309	RESISTOR 47K, 5%, 1/8W	1010804731
R401	RESISTOR 47K, 5%, 1/8W	1010804731
R402	RESISTOR 47K, 5%, 1/8W	1010804731
R403	RESISTOR 47K, 5%, 1/8W	1010804731
R404	RESISTOR 47K, 5%, 1/8W	1010804731
R501	RESISTOR 4.7, 5%, 1/4W	1001060024
R502	RESISTOR 4.7, 5%, 1/4W	1001060024
R503	RESISTOR 4.7, 5%, 1/4W	1001060024
R504	RESISTOR 4.7, 5%, 1/4W	1001060024
R505	RESISTOR 4.7, 5%, 1/4W	1001060024
R506	RESISTOR 4.7, 5%, 1/4W	1001060024
R507	RESISTOR 4.7, 5%, 1/4W	1001060024
R508	RESISTOR 4.7, 5%, 1/4W	1001060024
R509	RESISTOR 4.7, 5%, 1/4W	1001060024
R510	RESISTOR 4.7, 5%, 1/4W	1001060024
R511	RESISTOR 4.7, 5%, 1/4W	1001060024
R512	RESISTOR 4.7, 5%, 1/4W	1001060024
R513	RESISTOR 4.7, 5%, 1/4W	1001060024
R514	RESISTOR 4.7, 5%, 1/4W	1001060024
R515	RESISTOR 4.7, 5%, 1/4W	1001060024
R516	RESISTOR 4.7, 5%, 1/4W	1001060024
R517	RESISTOR 4.7, 5%, 1/4W	1001060024
R518	RESISTOR 4.7, 5%, 1/4W	1001060024
R519	RESISTOR 4.7, 5%, 1/4W	1001060024
R520	RESISTOR 4.7, 5%, 1/4W	1001060024
R521	RESISTOR 4.7, 5%, 1/4W	1001060024
R522	RESISTOR 4.7, 5%, 1/4W	1001060024
R523	RESISTOR 4.7, 5%, 1/4W	1001060024
R524	RESISTOR 4.7, 5%, 1/4W	1001060024
R525	RESISTOR 4.7, 5%, 1/4W	1001060024
R526	RESISTOR 4.7, 5%, 1/4W	1001060024
R527	RESISTOR 4.7, 5%, 1/4W	1001060024
R528	RESISTOR 4.7, 5%, 1/4W	1001060024
R601	RESISTOR 0.0, 0%, 1/4W	1011600021
RP101	RES NTWK 10 PIN SIP 10K COM	1006130021
RP201	RES NTWK 10 PIN SIP 10K COM	1006130021
RP601	RES NTWK 10 PIN SIP 10K COM	1006130021
S101	SWITCH, PUSHBUTTON,SPST	1010710001
S201	SWITCH, SPST, DIP, 8 POSITION	1012930033
U101	IC DIGITAL, MAX 490	1013240022
U102	IC. DIGITAL TL7705B	1012210006
U103	IC. DIGITAL, CPU 80C188EB-8	1012580008
U104	IC. LINEAR LM2903	1011410036
U105	PAL W/CU-9150 PAL SFTWRE U105	8120033698
U107	IC. DIGITAL 74HC373	1006480030
U108	IC. DIGITAL 74HC373	1006480030
U109	IC. DIGITAL 74HC245	1006470034
U202	IC. DIGITAL 74HC138	1006480013
U203	IC. DIGITAL 74HC138	1006480013
U204	IC. DIGITAL 74HC04	1010280023
U205	IC. DIGITAL 74HC74	1008000019
U206	IC. DIGITAL 74HC244	1006460039
U207	IC. LINEAR MC34072	1011440032
U208	IC. DIGITAL, 12 BIT A/D W/MUX	1013380029
U302	IC. DIGITAL, RAM 551001	1012600009
U303	IC. DIGITAL 28C64	1010660004
U304	IC,DIGITAL, UCN5842A	1012530035
U401	IC. DIGITAL UCN-5801A	1011800021
U402	IC. DIGITAL UCN-5801A	1011800021
U403	IC. DIGITAL UCN-5801A	1011800021
U404	IC. DIGITAL 74HC374	1006450033

U405	IC. DIGITAL MC14504	1006090037
U501	IC,DIGITAL, UCN5842A	1012530035
U502	IC,DIGITAL, UCN5842A	1012530035
U503	IC,DIGITAL, UCN5842A	1012530035
U504	IC,DIGITAL, UCN5842A	1012530035
U601	IC. DIGITAL 74HC688	1009050001
U602	IC. DIGITAL 74HC14	1006490027
U603	IC. DIGITAL 74HC14	1006490027
U604	IC. DIGITAL 74HC374	1006450033
U605	IC. DIGITAL 74HC244	1006460039
U606	IC. LINEAR LM340T5	0448600005
U607	IC. LINEAR LM340/7812	1003410022
XQ401	MOLDED TRANSIST0R MOUNT,TO-220	1013410025
XQ402	MOLDED TRANSIST0R MOUNT,TO-220	1013410025
XQ403	MOLDED TRANSIST0R MOUNT,TO-220	1013410025
XQ404	MOLDED TRANSIST0R MOUNT,TO-220	1013410025
XU103	SOCKET, IC, 84 PIN PLCC	1012640001
XU105	SOCKET, IC. 24 PIN SKINNY DIP	1013390024
XU301	SOCKET, IC, 32 PIN TAILLESS	1012530001
XU303	SOCKET, IC, 28 PIN TAILLESS	1006620001
Y101	CRYSTAL, 14.7456MHZ 50PPM	1013480015
	WASHER, SPLIT #4	0500020001
	SCREW, PH 4-40 X 1/4 LG.	0500850046
	SCREW, PH 4-40 X 5/16 LG.	0500850054
	WASHER, FLAT #4 .219 OD	0502560002
	BACKPLANE, CPU	8120031601

Figure 5.8.4 PC Assembly, CPU, 1A1A3, page 2/9.

B1P2199B

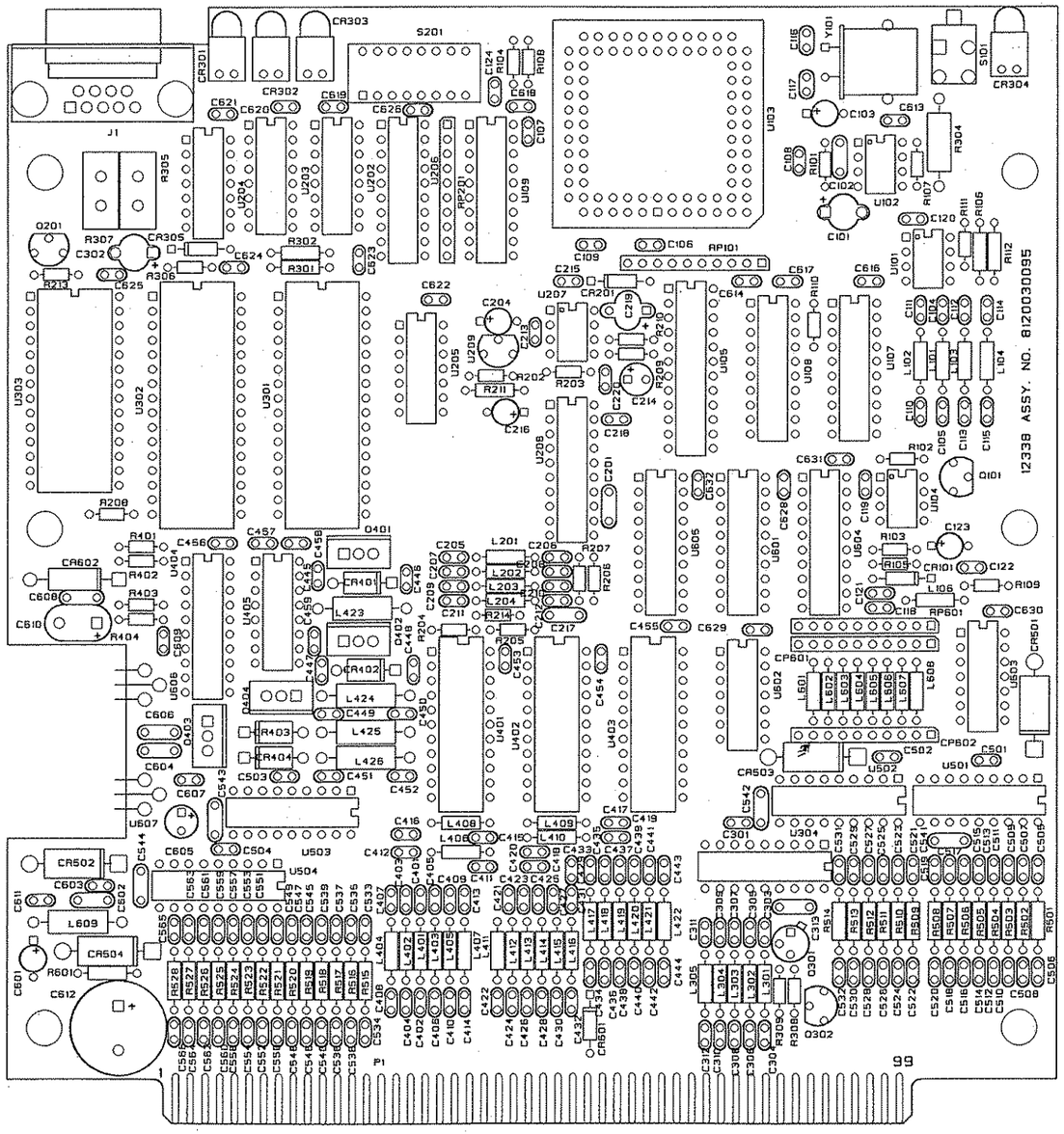

Figure 5.8.4 PC Assembly, CPU, 1A1A3, page 3/9.

P2199BA

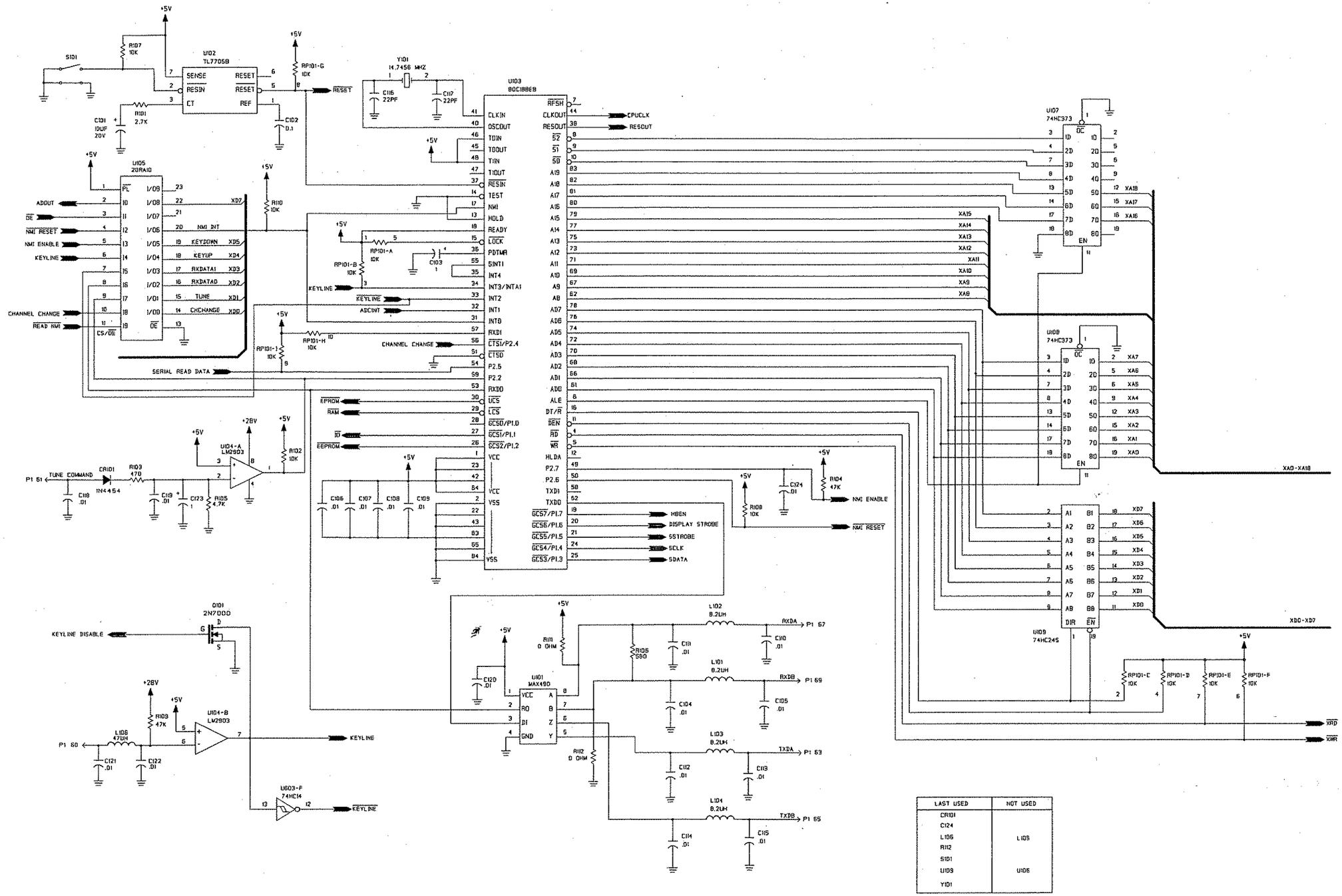

LAST USED	NOT USED
CR101	
C124	
L106	L105
R112	
S101	
U109	U106
Y101	

Figure 5.8.4 PC Assembly, CPU, 1A1A3, page 4/9.

P2199BB

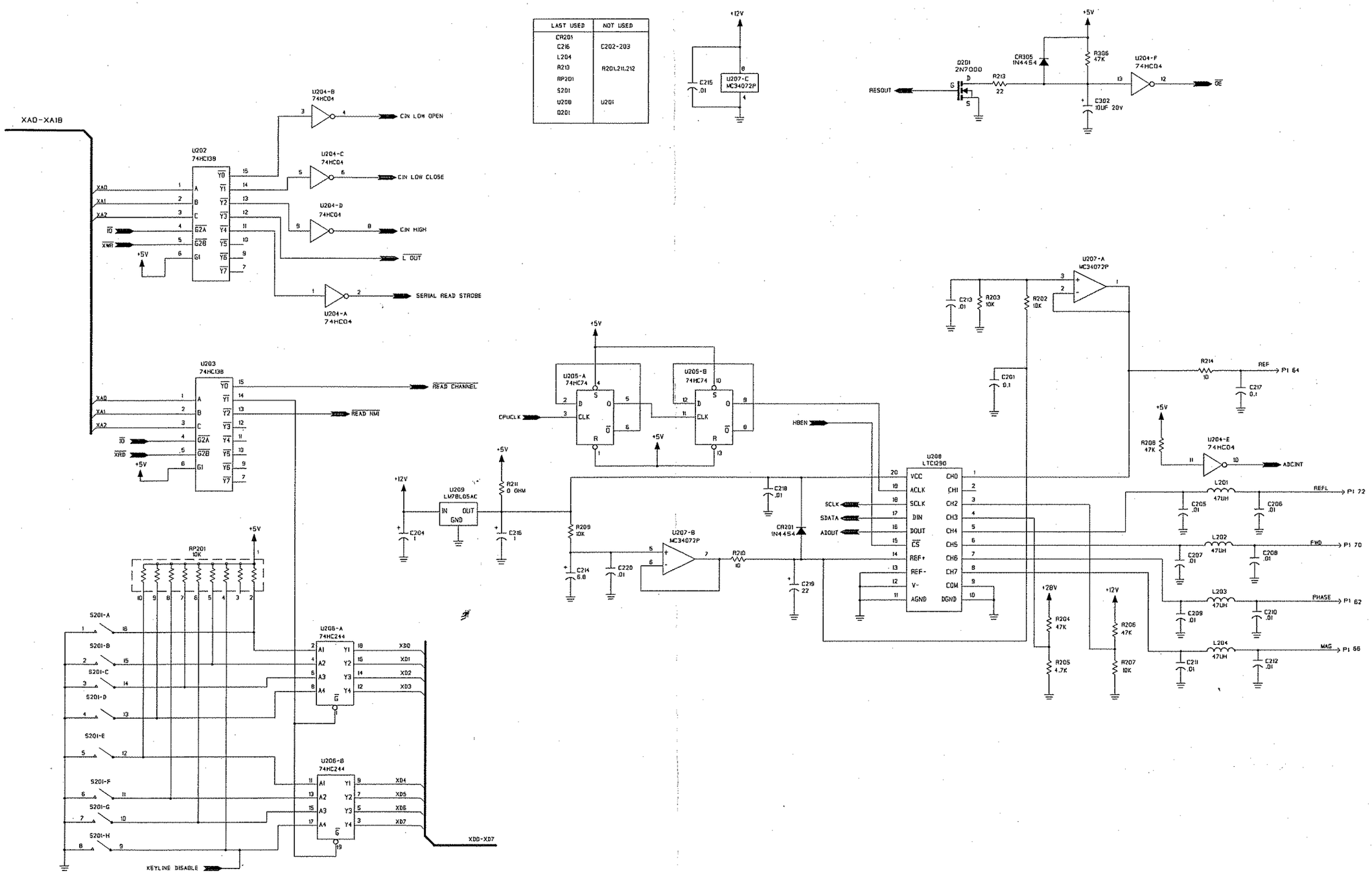

Figure 5.8.4 PC Assembly, CPU, 1A1A3, page 5/9.

P2199BC

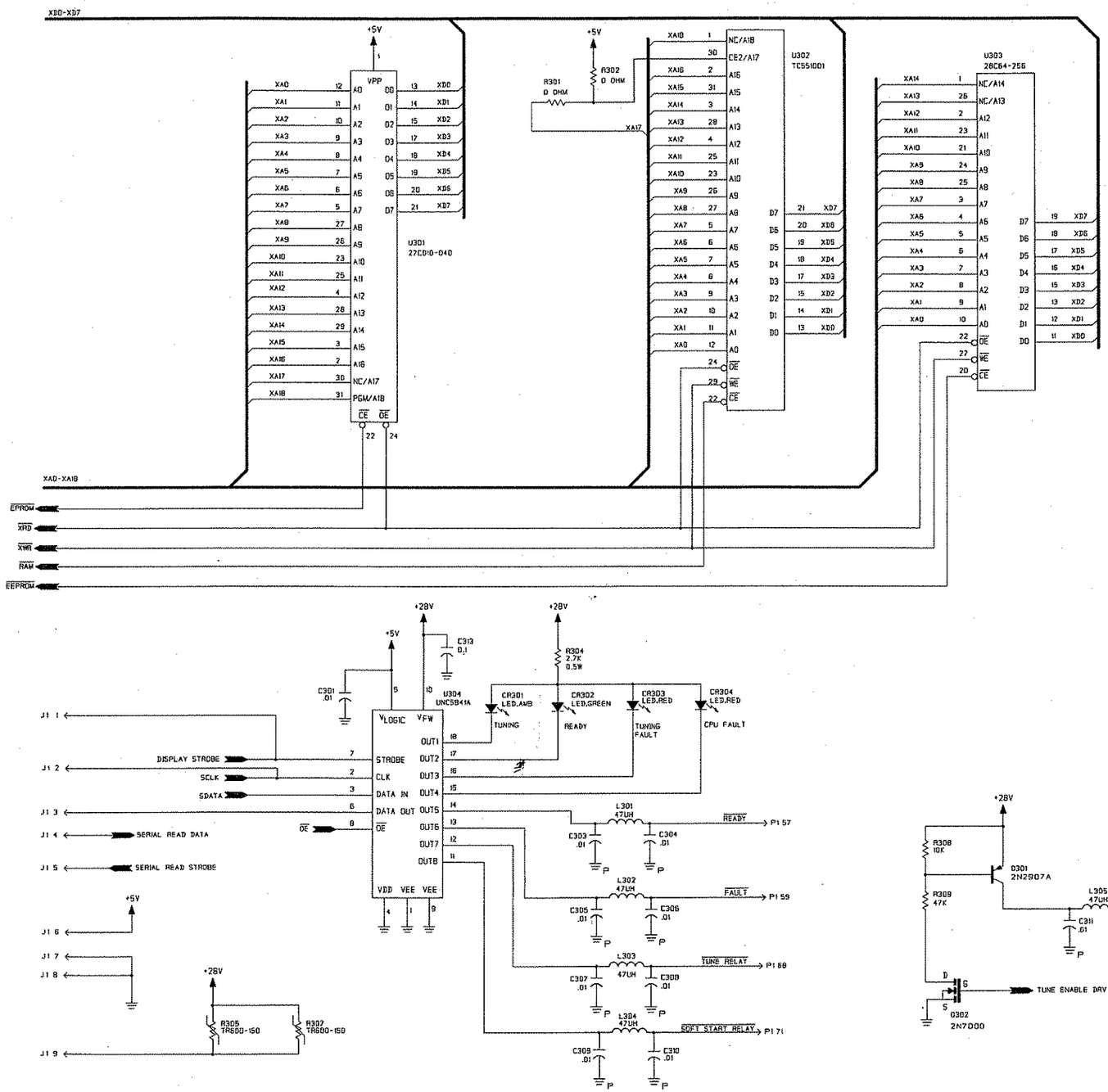

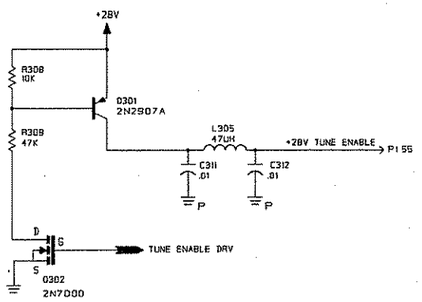

LAST USED	NOT USED
C313	
L305	
Q302	
R309	R303
U304	

Figure 5.8.4 PC Assembly, CPU, 1A1A3, page 6/9.

P2199BD

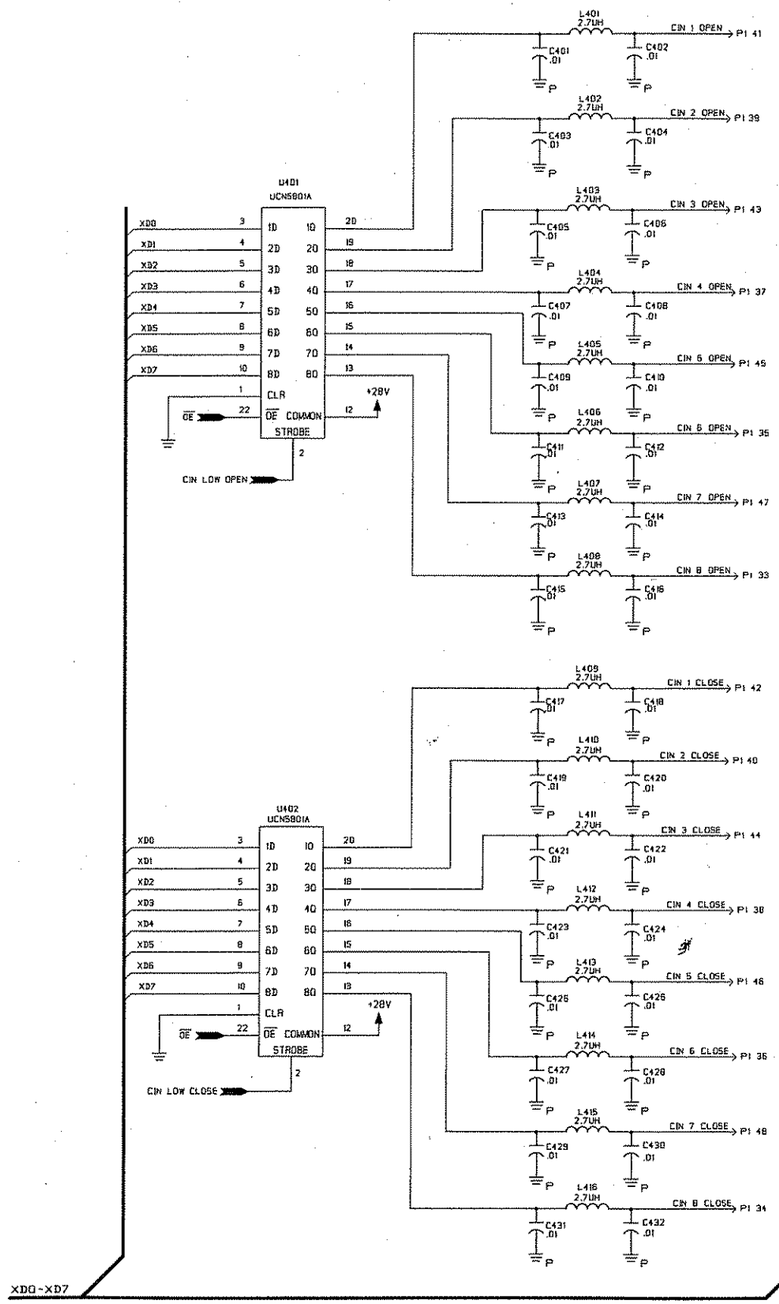

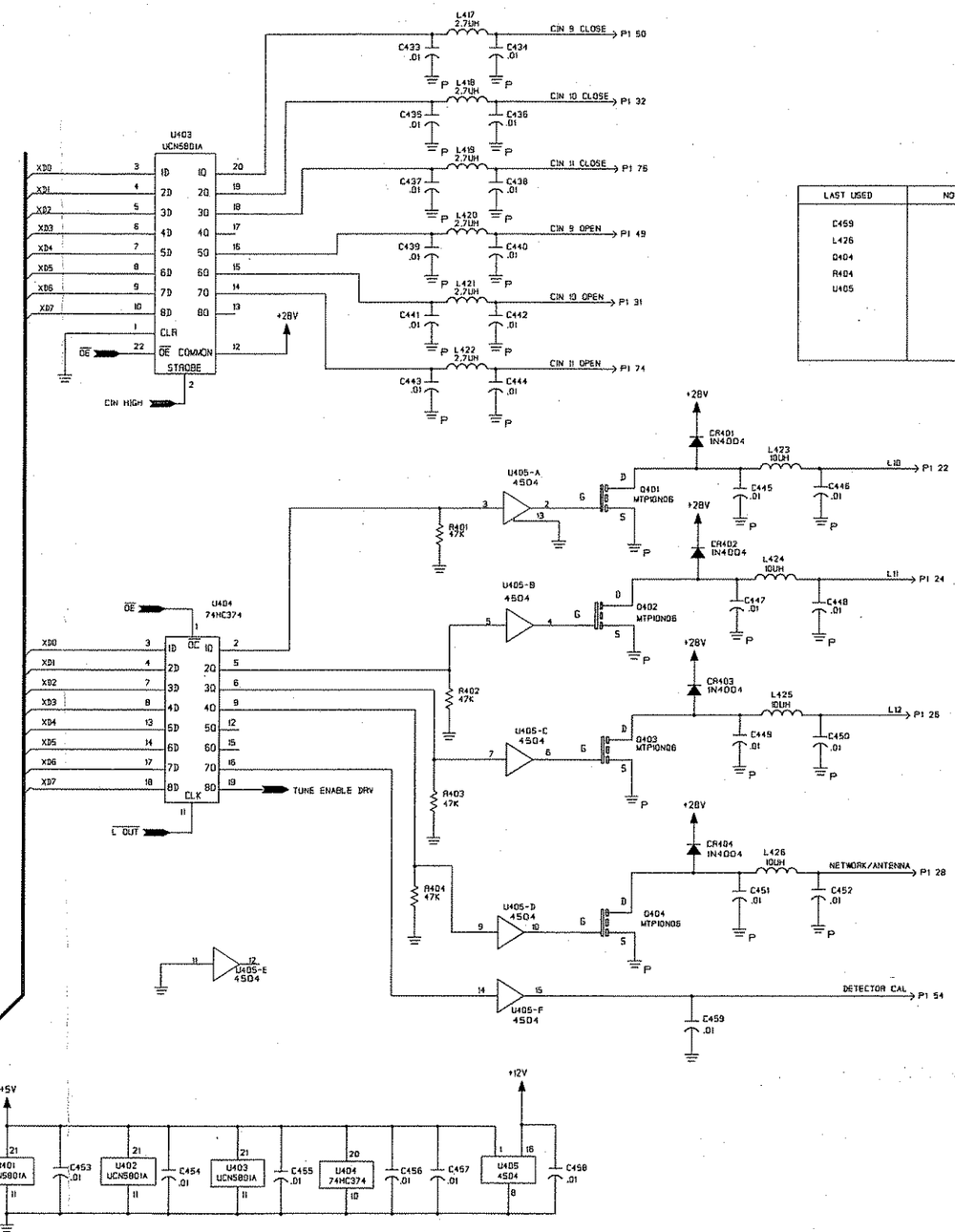

LAST USED	NOT USED
C459	
L426	
Q404	
R404	
U405	

Figure 5.8.4 PC Assembly, CPU, 1A1A3, page 7/9.

P2199BE

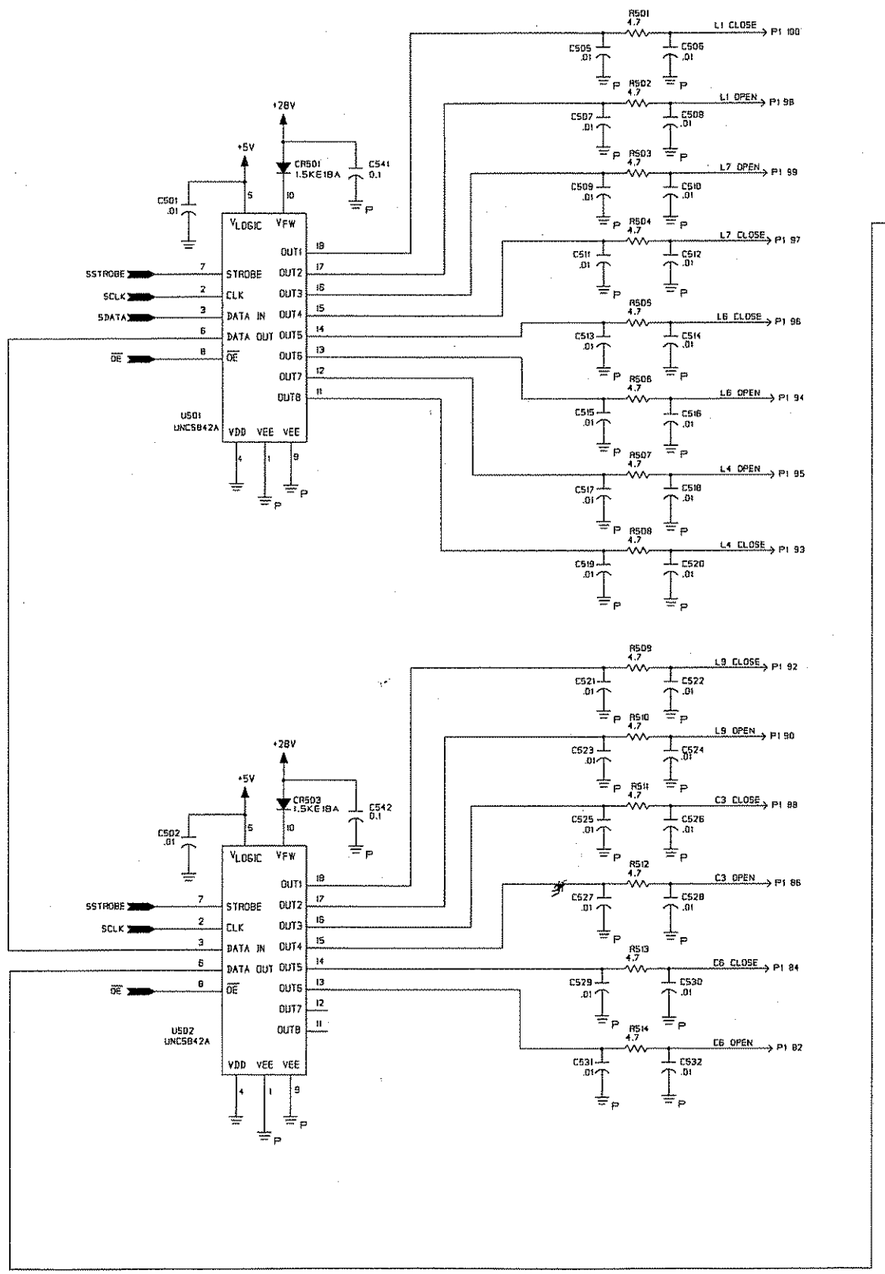

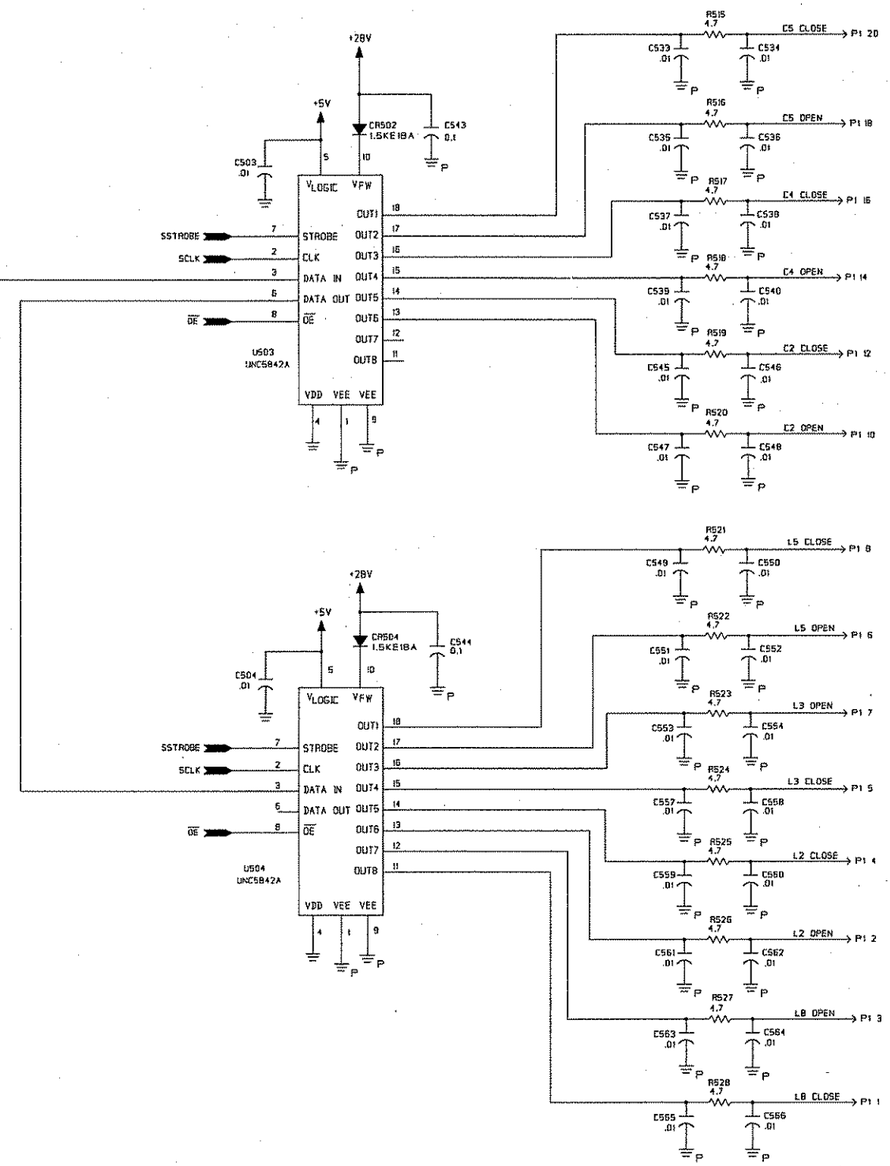

LAST USED	NOT USED
C566 CR504 L531 U504	C555, C556 L519, L520 L526

Figure 5.8.4 PC Assembly, CPU, 1A1A3, page 8/9.

P2199BF

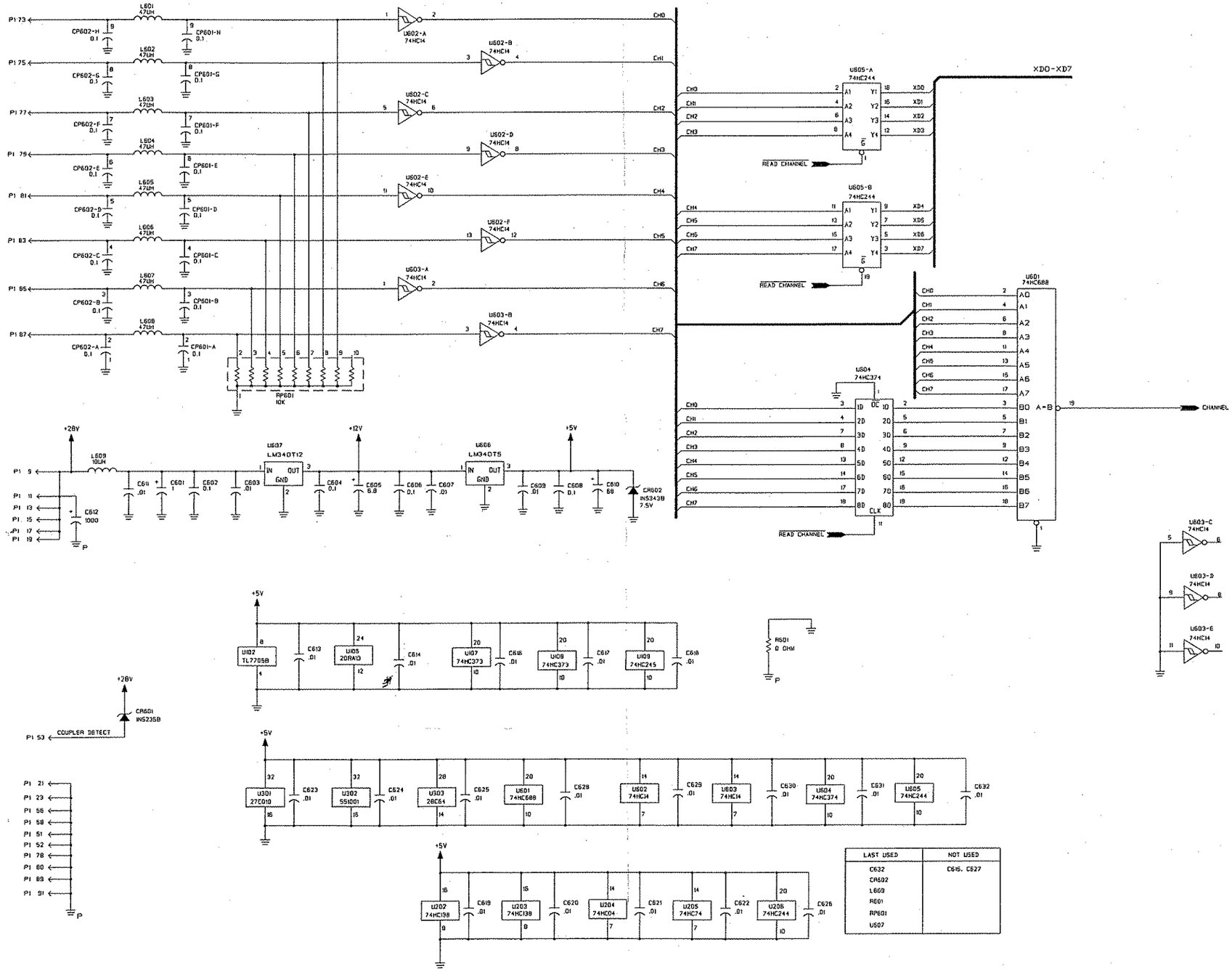

LAST USED	NOT USED
C632	C615, C627
CR602	
L609	
R601	
RP601	
U607	

Figure 5.8.4 PC Assembly, CPU, 1A1A3, page 9/9.

PCASSEMBLY, RF DETECTOR, 1A1A4A1

	PC ASSY. RF DETECTOR	**8120020090**
C1	CAP. 0.01UF, 50V, X7R, 20%	0281730008
C2	CAP. 0.01UF, 50V, X7R, 20%	0281730008
C3	CAP. 0.01UF, 50V, X7R, 20%	0281730008
C4	CAP. 0.01UF, 50V, X7R, 20%	0281730008
C5	CAP. 12PF, 200V NPO 5%	1012901203
C6	CAP. 0.01UF, 50V, X7R, 20%	0281730008
C7	CAP. 0.47UF, 50V, X7R, 20%	0283377771
C8	CAP. 5.5-18PF, 500V	1010020021
C9	CAP. 300PF, 500V, DM15, 2%	0282330003
C10	CAP. 0.01UF, 50V, X7R, 20%	0281730008
C11	CAP. 0.01UF, 50V, X7R, 20%	0281730008
C12	CAP. 0.01UF, 50V, X7R, 20%	0281730008
C13	CAP. 0.01UF, 50V, X7R, 20%	0281730008
C14	CAP. 0.01UF, 50V, X7R, 20%	0281730008
C15	CAP. 0.01UF, 50V, X7R, 20%	0281730008
C16	CAP. 0.01UF, 50V, X7R, 20%	0281730008
C17	CAP. 0.01UF, 50V, X7R, 20%	0281730008
C18	CAP. 0.01UF, 50V, X7R, 20%	0281730008
C19	CAP. 0.01UF, 50V, X7R, 20%	0281730008
C20	CAP. 0.01UF, 50V, X7R, 20%	0281730008
C21	CAP. 0.01UF, 50V, X7R, 20%	0281730008
C22	CAP. 0.01UF, 50V, X7R, 20%	0281730008
C23	CAP. 0.01UF, 50V, X7R, 20%	0281730008
C24	CAP. 0.001UF, 100V, X7R, 20%	0281630003
C25	CAP. 0.01UF, 50V, X7R, 20%	0281730008
C26	CAP. 0.01UF, 50V, X7R, 20%	0281730008
CR1	DIODE, RECTIFIER 1N4004	0405180004
CR2	DIODE, SIGNAL, SIL. 1N4454	0405270003
CR3	DIODE, SIGNAL, SIL. 1N4454	0405270003
CR4	DIODE, HOT CARRIER 1N6263	0405610009
CR5	DIODE, HOT CARRIER 1N6263	0405610009
CR6	DIODE, HOT CARRIER 1N6263	0405610009
CR7	DIODE, HOT CARRIER 1N6263	0405610009
CR8	DIODE, RECTIFIER 1N4004	0405180004
CR9	DIODE, HOT CARRIER 1N6263	0405610009
CR10	DIODE, LED, AMBER 550-2305	1011480000
CR11	DIODE, ZENER 1N5231B	0405390009
CR12	DIODE, RECTIFIER 1N4004	0405180004
CR13	DIODE, RECTIFIER 1N4004	0405180004
J1	CONNECTOR, RF, BNC	0753490005
K1	RELAY, SPDT, 24VDC, 10 AMP	1008290009
K2	RELAY, SPDT, 24VDC, 10 AMP	1008290009
K3	RELAY 1 FORM A 1 FORM B 24V	1012540022
L1	INDUCTOR, MOLDED, 0.47UH, 5%	0649410009
L2	INDUCTOR, MOLDED, 1000UH, 5%	0643310002
L3	INDUCTOR, MOLDED, 1000UH, 5%	0643310002
L4	INDUCTOR, MOLDED, 1000UH, 5%	0643310002
L5	INDUCTOR, MOLDED, 1000UH, 5%	0643310002
L6	INDUCTOR, MOLDED, 1000UH, 5%	0643310002
L7	INDUCTOR, MOLDED, 1000UH, 5%	0643310002
L8	INDUCTOR, MOLDED, 0.22UH, 10%	0650740009
L9	INDUCTOR, MOLDED, 47UH, 5%	0652680003
Q1	TRANSISTOR, N-CH, FET 2N7000	1011050013
Q2	TRANSISTOR, N-CH, FET 2N7000	1011050013
R1	RESISTOR, 300, 1%, 50W	1012530027
R2	RESISTOR, 9, 1%, 50W	1012520021
R3	RESISTOR, 9, 1%, 50W	1012520021
R4	RESISTOR, 300, 1%, 50W	1012530027
R5	RESISTOR 10K, 10%, 2W	0176010009
R6	RESISTOR 10K, 10%, 1/4W	0170410005
R7	RESISTOR 33, 10%, 1/2W	0171700007
R8	POT. 10K, 10%, 1/2W, 25 TURNS	1004880014
R9	RESISTOR 33, 10%, 1/2W	0171700007
R10	RESISTOR 12K, 10%, 1/4W	0183180003
R11	RESISTOR 18, 5%, 1/2W	0184730007
R12	RESISTOR 12K, 10%, 1/4W	0183180003
R13	RESISTOR 2.7K, 10%, 1/2W	0165780002
R14	RESISTOR 1K, 10%, 1/2W	0167480006
R15	RESISTOR, 50, 1%, 50W	1013420021
R16	RESISTOR 10K, 10%, 1/4W	0170410005
R17	RESISTOR 10K, 10%, 1/4W	0170410005
R18	RESISTOR 47K, 5%, 1/8W	1010804731
R19	RESISTOR 10K, 5%, 1/8W	1010801031
R20	RESISTOR 4.7K, 5%, 1/8W	1010804723
R21	RESISTOR 4.7K, 5%, 1/8W	1010804723
T1	TRANSFORMER, PHASE DETECTOR	6035040900
T2	TRANSFORMER, AMPL. DETECTOR	6035040802
TP1	TEST POINT, WHITE	0753640007
TP2	TEST POINT, WHITE	0753640007
TP3	TEST POINT, WHITE	0753640007
TP4	TEST POINT, WHITE	0753640007
TP5	TEST POINT, WHITE	0753640007
TP6	TEST POINT, WHITE	0753640007
U1	IC. LINEAR LM2903	1011410036
	WASHER, SPLIT #4	0500020001
	WASHER, FLAT #4 .281 OD	0500180008
	SCREW, PH 4-40 X 5/16 LG.	0500850054
	PC ASSY. RF DETECTOR	8120020090
	BACKPLANE,RF DETECTOR	8120021606

B1P2198B

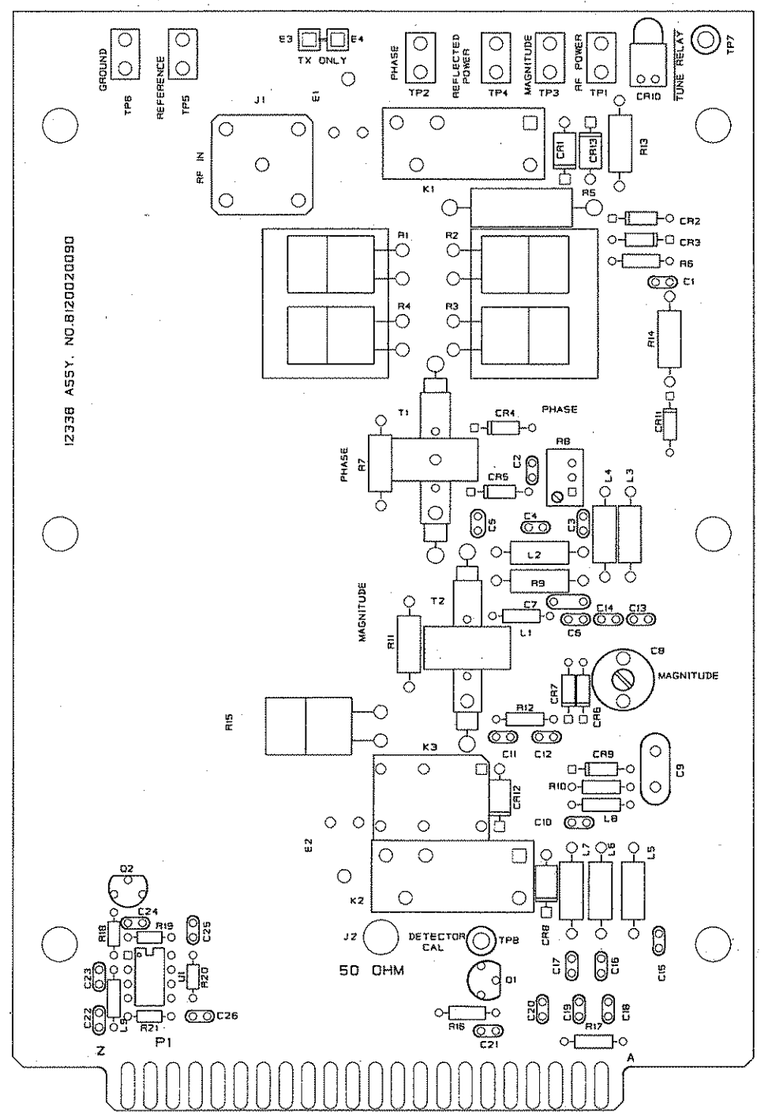

Figure 5.8.5 PC Assembly, RF Detector, 1A1A4A1, page 1/2.

P2198B

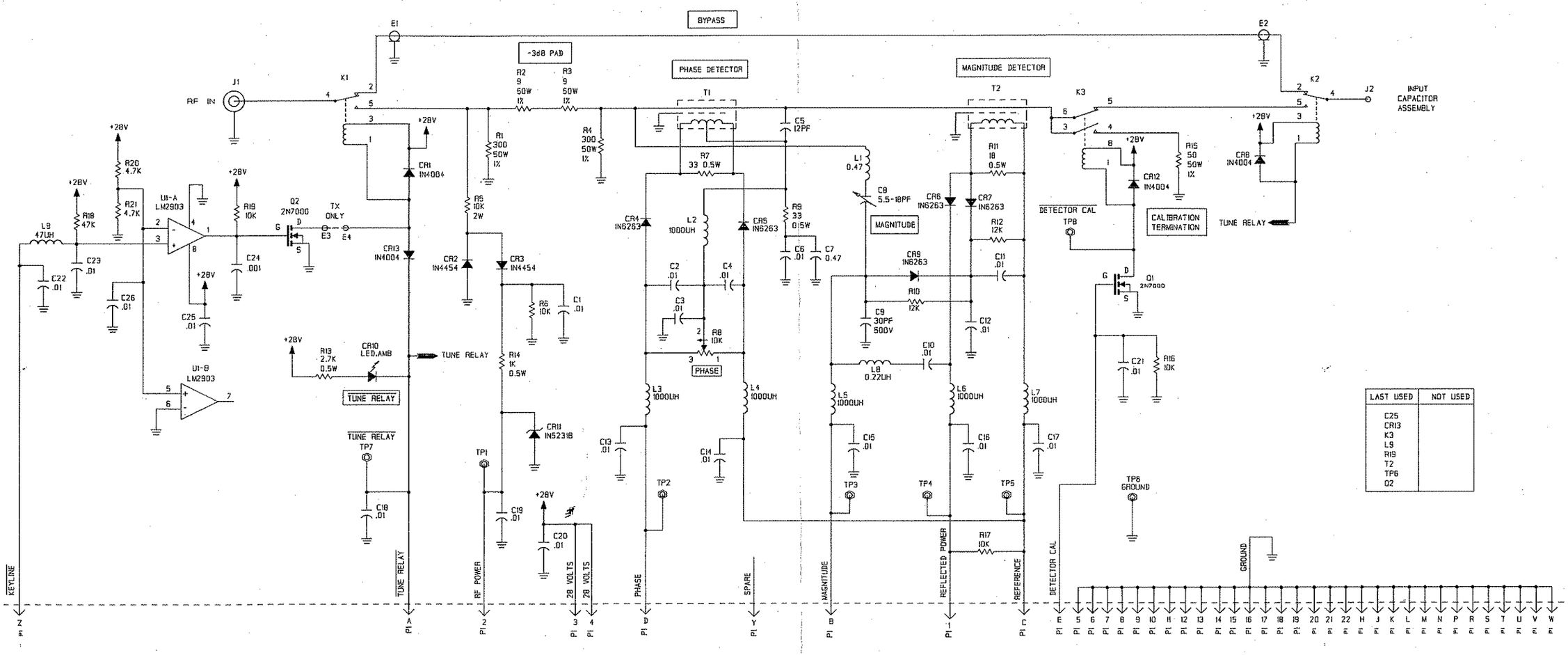

+ PHASE, > Ref >50 OHM, < Ref
- PHASE, < Ref <50 OHM, > Ref

Figure 5.8.5 PC Assembly, RF Detector, 1A1A4A1, page 2/2.

PC ASSEMBLY, INPUT CAPACITOR, 1A1A4A2

	PC ASSY, INPUT CAPACITOR	**8120042093**
C1	5.6 PF 3.6 KV	1013010027
C2	10 PF 3.6 KV	1013020022
C3	22PF 3.6 KV	1013030028
C4	39 PF 3.6 KV	1013050029
C5	82 PF 3.6 KV	1013070020
C6A	10 PF 3.6 KV	1013020022
C6B	150 PF 3.6 KV	1013090021
C7A	100 PF 3.6 KV	1013080025
C7B	220 PF 3.6 KV	1013100026
C8A	560 PF 2.5 KV	1013120027
C8B	82 PF 3.6 KV	1013070020
C9A	680 PF 2.5 KV	1013130022
C9B	560 PF 2.5 KV	1013120027
C9C	39 PF 3.6 KV	1013050029
C10A	1000 PF 1.0 KV	1013140028
C10B	56 PF 3.6 KV	1013060024
C10C	1500 PF 1.0 KV	1013150023
C11A	2200 PF 1.0 KV	1013160029
C11B	330 PF 3.6 KV	1013110021
C11C	27 PF 3.6 KV	1013180020
C11D	2200 PF 1.0 KV	1013160029
C11E	330 PF 3.6 KV	1013110021
C11F	33PF 3.6 KV	1013040023
C13	CAP. 0.01UF, 50V, X7R, 20%	0281730008
C14	CAP. 0.01UF, 50V, X7R, 20%	0281730008
C15	CAP. 0.01UF, 50V, X7R, 20%	0281730008
C16	CAP. 0.01UF, 50V, X7R, 20%	0281730008
C17	CAP. 0.01UF, 50V, X7R, 20%	0281730008
C18	CAP. 0.01UF, 50V, X7R, 20%	0281730008
C19	CAP. 0.01UF, 50V, X7R, 20%	0281730008
C20	CAP. 0.01UF, 50V, X7R, 20%	0281730008
C21	CAP. 0.01UF, 50V, X7R, 20%	0281730008
C22	CAP. 0.01UF, 50V, X7R, 20%	0281730008
C23	CAP. 0.01UF, 50V, X7R, 20%	0281730008
C24	CAP. 0.01UF, 50V, X7R, 20%	0281730008
C25	CAP. 0.01UF, 50V, X7R, 20%	0281730008
C26	CAP. 0.01UF, 50V, X7R, 20%	0281730008
C27	CAP. 0.01UF, 50V, X7R, 20%	0281730008
C28	CAP. 0.01UF, 50V, X7R, 20%	0281730008
C29	CAP. 0.01UF, 50V, X7R, 20%	0281730008
C30	CAP. 0.01UF, 50V, X7R, 20%	0281730008
C31	CAP. 0.01UF, 50V, X7R, 20%	0281730008
C32	CAP. 0.01UF, 50V, X7R, 20%	0281730008
C33	CAP. 0.01UF, 50V, X7R, 20%	0281730008
C34	CAP. 0.01UF, 50V, X7R, 20%	0281730008
C35	CAP. 0.01UF, 50V, X7R, 20%	0281730008
K1	RELAY,DK 1AE L2 24V	1013170024
K2	RELAY,DK 1AE L2 24V	1013170024
K3	RELAY,DK 1AE L2 24V	1013170024
K4	RELAY,DK 1AE L2 24V	1013170024
K5	RELAY,DK 1AE L2 24V	1013170024
K6	RELAY,DK 1AE L2 24V	1013170024
K7	RELAY,DK 1AE L2 24V	1013170024
K8	RELAY,DK 1AE L2 24V	1013170024
K9A	RELAY,DK 1AE L2 24V	1013170024
K9B	RELAY,DK 1AE L2 24V	1013170024
K10A	RELAY,DK 1AE L2 24V	1013170024
K10B	RELAY,DK 1AE L2 24V	1013170024
K11A	RELAY,DK 1AE L2 24V	1013170024
K11B	RELAY,DK 1AE L2 24V	1013170024
ZS1	SPARK GAP, 1-2KV	1012520030

	WASHER, SPLIT #6	0500040001
	WASHER, FLAT #6 .312 OD	0500200009
	NUT, HEX 6-32 X 5/16AF	0501900004
	L BRACKET, CIN ASSY, CU-9150	8120042301

B1P2197B

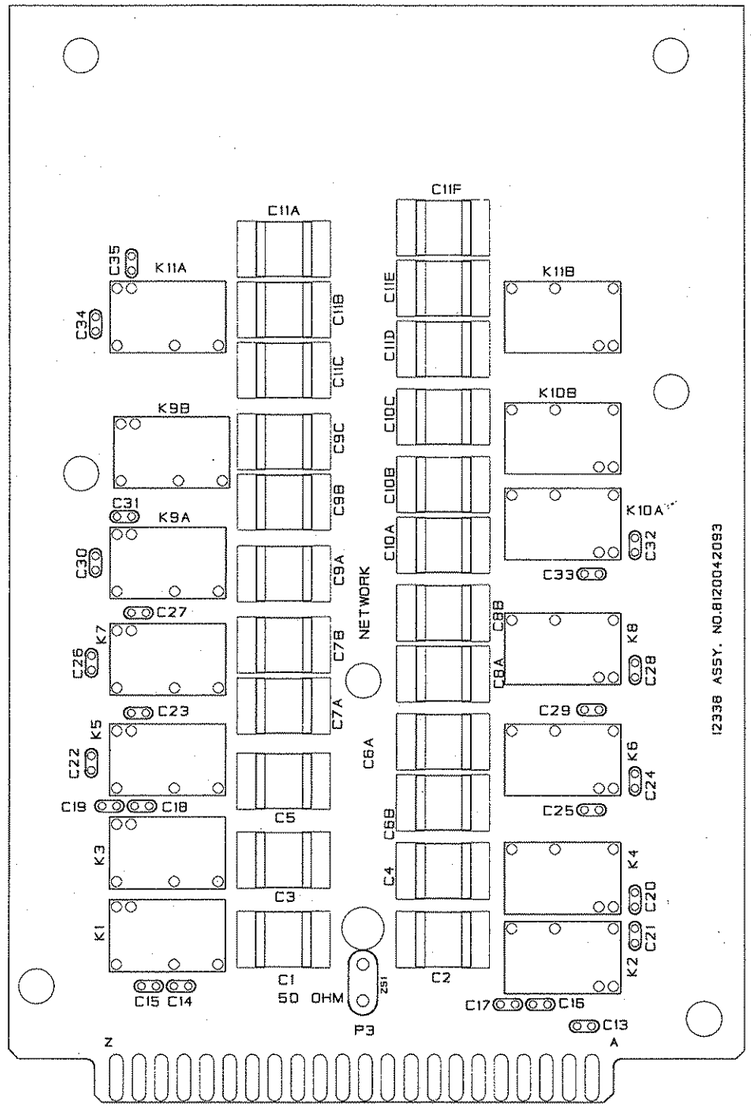

Figure 5.8.6 PC Assembly, Input Capacitor, 1A1A4A2, page 1/2.

P2197B

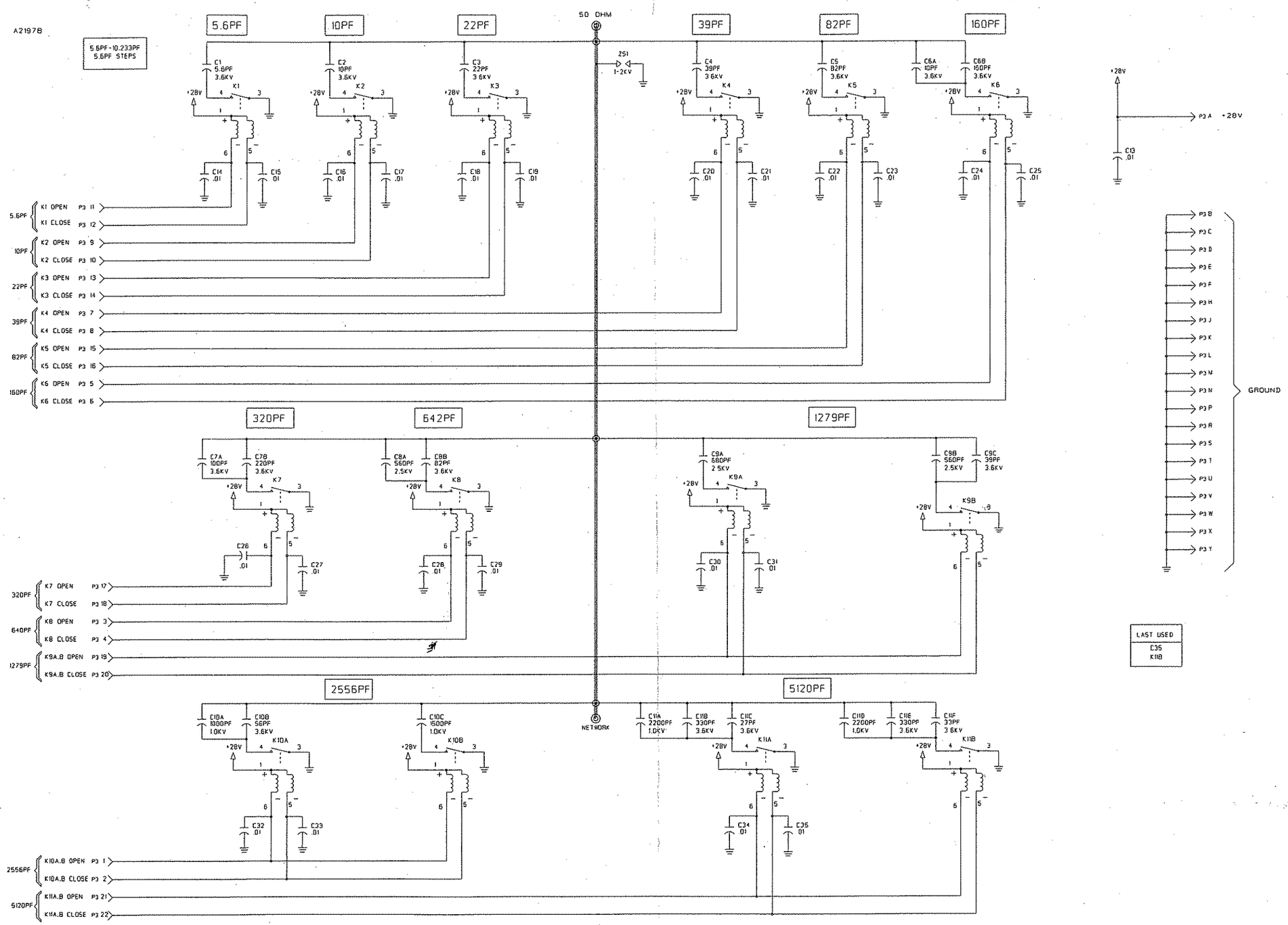

Figure 5.8.6 PC Assembly, Input Capacitor, 1A1A4A2, page 2/2.

SECTION VI

OPTIONS

6.1 DIAGNOSTIC TEST SET

6.1.1 GENERAL INFORMATION

6.1.1.1 SCOPE OF OPTION SECTION

This section contains information necessary to utilize the TS-9150 Diagnostic Test Set to isolate faults in a CU-9150/CU-9100A Kilowatt Antenna Coupler.

6.1.1.2 PURPOSE OF EQUIPMENT

The TS-9150 Diagnostic Test Set provides the tools required to diagnose and isolate faults in a CU-9150/CU-9100A Kilowatt Antenna Coupler. Three separate functions are provided:

- Coupler CPU board level test capability
- Display of coupler state and the ability to modify that state
- Display of coupler tuning history

6.1.1.3 EQUIPMENT SUPPLIED

The following is a list of equipment, with appropriate Sunair part numbers, supplied as the TS-9150 Diagnostic Test Set

Sunair PN	Description
1012890031	Cable Assy, DB-9 Male to DB-9 Female
1012900037	Cable Assy, DB-25 Male to DB-9 Female
8092500096	Cable Assy, LPA-9600 to Coupler
8120030036	Kilowatt Coupler CPU Test Fixture
8120034091	EPROM with Test Fixture Software
8120037189	Software, TuneView, on disk
8120037391	Tested Serial Breakout Board
8120039394	Tested Display Board
8120907604	Carrying Case, Black Plastic
8120907701	Bracket, Panel Support
8120907892	Cable Assy, CU-9150 to DTS (DB9 Male to Male)

The following sections detail the operation of the different functions of the TS-9150. Below are definitions of terms as they are used to describe coupler operation.

Network	A combination of input capacitance (Cin), series inductance (Lseries), output capacitance (Cout), and output inductance (Lout) which comprise a matching circuit between the antenna terminal and the RF input connector.
Network Element	One of the four reactive matching elements. These elements are Cin, Lseries, Cout, and Lout. Each network element is made up of many network components.
Network Component	One of the discrete reactive components in the coupler. For example, C1 on the Input Capacitor board is a network component.

6.1.2 TEST SET OPERATION

6.1.2.1 CPU TEST FIXTURE OPERATION

In order to perform a board level test of the 8120030095 Coupler CPU assembly, the following is required:

Sunair PN	Description
1012890031	Cable Assy, DB-9 Male to DB-9 Female
8120030036	Kilowatt Coupler CPU Test Fixture
8120034091	EPROM with Test Fixture Software
8120907892	Cable Assy, CU-9150 to DTS (DB9 Male to Male)
CFE	DC Power Supply, 28V at 2A
CFE	PC or Terminal

All of the above items which have Sunair part numbers are included with the 8120907591 Diagnostic Test Set.

Remove the EPROM from the U301 position of the board under test.

Install the Test EPROM PN 8120034091 in the U301 position.

Set S1 on the test fixture to its **OFF** (down) position.

Set all of the switches on S201 of the board under test to the **OFF** (down) position.

Set S601 on the test fixture to "RUN EEPROM TEST".

Configure the PC or terminal serial communications parameters for 8 bits, no parity, one stop bit, at 9600 bps. Choose ASCII if more than one character set is supported by the terminal or program. No special escape codes are utilized by the test software, so most terminal emulation modes will work fine. VT-100 terminal emulation works well and is supported by most PC terminal programs.

If Hyperterminal is being used in a Windows 95 environment, the communications setup can be accomplished as follows:

Open the Hyperterminal folder by clicking "Start" in the lower left hand corner, clicking "Accessories", and "Hyperterminal".

Start Hyperterminal by clicking on the Hypertrm.exe icon.

Choose a name for the new "connection" being created. The "connection" is really just a collection of serial communications parameters which can be stored for later use.

Choose an icon for the connection and click "OK".

On the next dialog box, select the desired COM port under the "Connect using". Most users will need to select either "Direct to Com 1" or "Direct to Com 2". Click "OK".

The next dialog box is where the actual communication parameter setup takes place.

Set the "Bits per second" list box to "9600".
Set the "Data bits" list box to "8".
Set the "Parity" list box to "None".
Set the "Stop bits" list box to "1".

Set the "Flow control" list box to "None".

Click "OK".

The Hyperterminal main screen will now be displayed, and is ready to display the test fixture output. When the test session is complete and Hyperterminal is closed, it will ask if the session should be save. Answer "Yes" to this question so that Hyperterminal will save the connection, and create a new icon in the Hyperterminal folder. In the future, Hyperterminal should be started by clicking on this new icon so that the communications parameters do not have to be set up for every test session.

Connect P1 (TO PC) on the test fixture to the PC or terminal serial port. Plug the CPU to be tested into the fixture. Note that the component side the board should be facing the front of the fixture. The front of the fixture is labeled "FRONT OF BOARD". This is important, as it is possible to plug the CPU into the fixture backwards.

WARNING: Carefully observe the orientation of the board under test with respect to the test fixture. Make sure that the component side of the board under test faces toward the front of the test fixture (labeled "FRONT OF BOARD"). Failure to do so can result in damage to the fixture and the board under test.

Connect P2 (TO BOARD UNDER TEST) to J1 of the CPU assembly being tested using cable PN 8120907892.

Set the power supply output voltage to 28V. Turn the power supply off and connect it to J3 on the test fixture.

Turn on the power supply.

Turn on the fixture power supply using S1.

Follow the instructions that appear on the terminal screen.

If the board under test is good, the last line displayed on the terminal at the completion of the test will be PASSED. Otherwise FAILED will be displayed.

When a test fails, a message describing the failure will be displayed on the terminal and the program will not continue until the CONTINUE button is pressed on the test fixture.

To restart the test, press the reset switch (S101) on the board under test.

Since the EEPROM test takes quite a while to complete, it can be bypassed during troubleshooting by setting S602 on the test fixture to BYPASS EEPROM TEST and pressing the reset switch (S101 on the board under test). In this case, the program will always display "*** TEST FAILED ***" at the end of the test.

At the end of the test, all 4 LEDs at the top of the board under test should be lighting in sequence.

Before installing the CPU board back in a coupler, remove the test EPROM and put the standard EPROM PN 8120033299 back into the U301 position.

6.1.2.2 DISPLAY BOARD OPERATION

The display board allows the user to view and modify the state of the relays in the coupler. The display board is little more than a collection of displays and switches that can be addressed serially by the coupler CPU. The display board occupies the right side of the Diagnostic Test Set case.

In order for the display board to be utilized, DIP switch number 7 of S201 on the coupler CPU must be in the UP (ON) position. However, with the switch in this position, the CPU clock is active at all times, and is easily heard by the radio receiver. For this reason, DIP switch number 7 of S201 should only be in the UP position during coupler diagnostics, and should be in the DOWN position during normal operation.

Turn the radio set off. Remove the coupler cover. Remove the inner cover. Set DIP switch number 7 of S201 on the coupler CPU to its UP position. Connect cable PN 8120907892 (DB9 Male to Male) between J1 of the CPU board (labeled "DISPLAY" on the inner cover) and J1 on the display board (labeled "TO COUPLER CPU"). Set the ON/OFF switch on the display board to ON. Turn the radio set on.

The display board now indicates the state of each relay in the coupler. It also shows the sum total capacitance or inductance values for each of the network elements.

At this point, the value of any network element can be modified by pressing the up or down buttons for that element. For instance, pressing "C IN UP" will add one increment of capacitance (about 5 pF) to the amount of Cin that is already active. Pressing the "C IN UP" button and holding it down will cause capacitance to be added to Cin continuously. The buttons for Lseries, Cout, and Lout work in a similar manner.

The red LEDs for each network component correspond to a relay. When a LED is lit, it indicates that the component associated with that relay is in use in the network. If the component is a capacitor, then the relay is closed. If the component is an inductor, then the relay is open unless it is the Lout bypass relay. The Lout bypass relays (K15 and K19 on the chassis) are in the bypass state (connected to the Normally Closed contact) when the "LOUT BYPASS" LED is illuminated.

The HOME button causes the coupler to go to a state in which all network elements are 0pf or 0uH.

The TUNE/KW button causes the coupler to switch the state of the RF detector. When the red TUNE LED is lit, the detector is switched into the RF path and the readings from the magnitude and phase detectors are displayed on the display board.

WARNING: Never apply more than tune power to the coupler when the red TUNE LED is lit on the display board. Tune power is AM carrier power and is roughly 40 watts. Higher power levels will destroy the RF detector components.

A network solution can be arrived at by hand when the red TUNE LED is lit, and AM carrier power is applied by keying the radio in AM mode (*with the LPA-9600 kilowatt amplifier turned off*). When the magnitude and phase displays are as close to zero as possible, then the coupler is tuned.

The magnitude and phase displays show the magnitude and phase detector output values in millivolts.

When the green KW LED is lit, the RF detector is switched out of the RF path. The magnitude and phase detectors are no longer active, so the display board simply indicates "-----" on the magnitude and phase displays. It is safe to transmit at the 1000 watt power level in this state.

The SAVE and RECALL keys work in conjunction with the CHANNEL indicator on the display board. THE CHANNEL INDICATOR DOES NOT INDICATE THE CHANNEL THE RADIO IS ON. The channel indicator provides access to the coupler channel memory. To save a network solution for later use, dial in a channel number using the knobs below the channel indicator and press the SAVE button. This will save the network in that channel location in the coupler's memory. The network solution can be recalled at a later time in two ways. The first method is to set the radio to the desired channel number. The other method is to use the knobs below the channel indicator to dial in the desired channel, and then press the RECALL button.

The CPU TUNE START and CPU TUNE STEP keys are reserved for future use and are disabled.

6.1.2.3 SERIAL BREAKOUT BOARD OPERATION

The Serial Breakout Board provides the user with the ability to see the steps the coupler took in arriving at a network solution. The Serial Breakout Board is installed on the left side of the Diagnostic Test Set case.

The following is required to use the Serial Breakout section of the test set:

Sunair PN	Description
1012900037	Cable Assy, DB25 Male to DB9 Female
8092500096	Cable Assy, LPA-9600 to Coupler
8120037189	Software, TuneView
CFE	PC running Windows 3.1 or later with an available serial port

This list assumes that there is an existing cable between the LPA-9600/LPA-9500 and the antenna coupler.

The TuneView software can be run directly from the distribution floppy, but it is preferable to have it resident on the hard drive. To install TuneView:

- Insert the TuneView diskette into the floppy drive
- Open a DOS window
- Create a new directory (md\TuneView)
- Change to that directory (cd\TuneView)
- Copy the TuneView executable (copy a:TuneView.exe .)
- Close the DOS window (exit)
- Create a shortcut to the TuneView executable on the desktop.

Disconnect the control cable between the linear amplifier and the coupler at the amplifier end (J4 on the amplifier rear panel). Connect this cable to J2 on the Diagnostic Test Set (labeled "TO KILOWATT COUPLER"). Connect the other control cable (PN 8092500096) between J1 of the Diagnostic Test Set and J4 of the amplifier. Using the DB25 to DB9 cable PN 1012900037, connect the 25 pin end to J5 of the Diagnostic Test Set Serial Breakout Board. Connect the other end to the serial port of the PC running TuneView.

Start TuneView. The first time TuneView is run, it must be configured to use the COM port connected to the Serial Breakout Board. On the menu, click on "Settings", and then on "Com Port". This will bring up a dialog box that allows selection of the desired COM port. This information is stored on disk so that the correct COM port is selected the next time TuneView is run.

The TuneView main screen displays several parameters describing the most recent tune:

Channel — The radio channel that was tuned.

Freq — The radio frequency that was tuned. This frequency is truncated to display megahertz only. For example, if the radio frequency was 6.99999 MHz, TuneView would show "6" under "Freq".

Magoffset — The output of the magnitude detector in millivolts when the 50 ohm calibration load is switched in. This number is subtracted from all future readings of the detector, so minor detector imbalances over time, temperature, and frequency do not affect the network solution. If this number is greater than 250 or less than -250, the RF detector board should be adjusted to null the magnitude detector.

Phaseoffset — The output of the phase detector in millivolts when the 50 ohm calibration load is switched in. This number is subtracted from all future readings of the detector,

so minor detector imbalances over time, temperature, and frequency do not affect the network solution. If this number is greater than 250 or less than -250, the RF detector board should be adjusted to null the phase detector.

Network #	This is the number of the attempt by the coupler to arrive at a network solution. Each network consists of a value of Cin, Lseries, Cout, and Lout. The magnitude and phase readings corresponding to this network are also displayed. The larger the network number, the later in the tune cycle that it occurred.
Cin	The input capacitance of the currently selected network. Each bit in the top number corresponds to a relay. If the bit is 1, then the corresponding relay is closed, making its associated Cin component active in the network. The bottom number is Cin in picofarads.
Lseries	The series inductance of the currently selected network. Each bit in the top number corresponds to a relay. If the bit is 1, then the corresponding relay is open, making its associated Lseries component active in the network. The bottom number is Lseries in microhenrys.
Cout	The output capacitance of the currently selected network. Each bit in the top number corresponds to a relay. If the bit is 1, then the corresponding relay is closed, making its associated Cout component active in the network. The bottom number is Cout in picofarads.
Lout	The output inductance of the currently selected network. If the bit is 1, then the corresponding relay is open, making its associated Lout component active in the network. The bottom number is Lout in microhenrys. If lout=0, then the Lout bypass relays (K15 and K19 on the chassis) are in the bypass state (connected to the Normally Closed contact).

The magnitude and phase values for each network are plotted on the chart as a small red square. The center of the chart is magnitude=0 mV, phase=0 mV. This corresponds to a network input impedance of 50 ohms at 0 degrees. Positive phase values are plotted in the top half of the chart. Negative magnitude values are plotted on the right hand side of the chart. This is because the magnitude detector output is negative for impedances which have a magnitude greater than 50 ohms, and positive for impedances which have a magnitude less than 50 ohms. Using this convention, the plot produced is similar to a Smith chart.

The arrow keys control which network is displayed. The currently selected network is shown on the chart as the single blue square. All of the other attempts are shown as red squares. Pressing the UP ARROW key moves to networks earlier in the tune cycle. Pressing the DOWN ARROW key moves to networks later in the tune cycle.

The PAGE UP key performs the same function as the UP ARROW key. The PAGE DOWN key performs the same function as the DOWN ARROW key.

The box at the bottom of the screen shows a log of the tuning attempts for the current session. For each tune attempt, a line is added showing the channel number and whether or not the tune was successful.

The currently displayed tune history can be saved to a file using the menu item "File", and then "Save As". This file can later be loaded by clicking "File", then "Open", and selecting the desired file.

6.1.2.4 BITE

The built in test function (BITE) of the coupler is initiated under the BITE menu on the radio, by the CU-

BITE softkey. Pressing CU-BITE causes the radio to tune the coupler on four dedicated BITE channels, shown below:

Channel	Frequency
250	1.75 MHz
251	5.75 MHz
252	16.75 MHz
253	29.75 MHz

The coupler is aware that a BITE test should be performed because these channels are only used for BITE.

After a tune solution is found, but before sending a READY signal back to the radio, the coupler checks a portion of the relays. This check consists of changing the state of each relay, one at a time, and determining if this change makes a sufficient difference in the readings of the magnitude and phase detectors.

If the coupler does not detect a large enough change in the magnitude and phase detector readings as it changes the state of each relay, it reports a tuning FAULT signal back to the radio. If the coupler does detect a large enough change in the magnitude and phase detector readings, it reports a READY signal back to the radio.

When a CU-BITE failure occurs, it is necessary to use TuneView and the Serial Breakout Board to find out which components the coupler determined to be faulty. Connect the Serial Breakout Board and start TuneView as detailed in section 6.1.2.3. Run the CU-BITE test again. The list box at the bottom of the TuneView screen will indicate which components need attention.

The list box also contains information about each relay check. The state of all of the relays in shown along with the magnitude and phase difference that was generated by toggling the state of one relay.

The small value components are not checked individually. Rather, the three smallest Cin values (C1, C2, and C3 on the Input Capacitor board) are checked as a group and the three smallest Lseries values (L9, L1, and L2 on the chassis) are checked as a group. The coupler switches the three smallest Cin components out of the network and takes a magnitude and phase reading. It then switches the three smallest components into the network and takes another magnitude and phase reading. As long as these two readings have a large enough difference between them, all of the components in the group are assumed to be working properly. The three smallest Lseries values are checked in the same way.

THIS PAGE LEFT INTENTIONALLY BLANK

PC ASSEMBLY, TEST FIXTURE, CU-9150 CPU

	TEST FIXTURE, CU-9150 CPU	**8120030036**
C1	CAP. 0.01UF, 50V, X7R, 20%	0281730008
C2	CAP. 22UF, 15V	0281690006
C3	CAP. 22UF, 15V	0281690006
C4	CAP. 47UF, 20V	0281700001
C5	CAP. 10UF, 20V	1007290005
C6	CAP. 47UF, 20V	0281700001
C7	CAP. 0.01UF, 50V, X7R, 20%	0281730008
C8	CAP. 1UF, 35V	0281660000
C9	CAP. 0.1UF, 50V, X7R	1011180014
C10	CAP. 0.01UF, 50V, X7R, 20%	0281730008
C11	CAP. 0.01UF, 50V, X7R, 20%	0281730008
C12	CAP. 0.1UF, 50V, X7R	1011180014
C13	CAP. 68UF, 15V	0296540005
C201	CAP. 0.01UF, 50V, X7R, 20%	0281730008
C202	CAP. 0.01UF, 50V, X7R, 20%	0281730008
C203	CAP. 0.01UF, 50V, X7R, 20%	0281730008
C309	CAP. 0.01UF, 50V, X7R, 20%	0281730008
C310	CAP. 0.01UF, 50V, X7R, 20%	0281730008
C401	CAP. 0.01UF, 50V, X7R, 20%	0281730008
C402	CAP. 0.01UF, 50V, X7R, 20%	0281730008
C403	CAP. 0.01UF, 50V, X7R, 20%	0281730008
C404	CAP. 0.01UF, 50V, X7R, 20%	0281730008
C501	CAP. 0.01UF, 50V, X7R, 20%	0281730008
C502	CAP. 0.01UF, 50V, X7R, 20%	0281730008
C601	CAP. 0.01UF, 50V, X7R, 20%	0281730008
C602	CAP. 0.01UF, 50V, X7R, 20%	0281730008
C603	CAP. 0.01UF, 50V, X7R, 20%	0281730008
C604	CAP. 0.01UF, 50V, X7R, 20%	0281730008
CR1	DIODE, LED, RED MV5754A	1004350023
CR2	DIODE, RECTIFIER 1N4004	0405180004
CR3	DIODE, RECTIFIER 1N4004	0405180004
F1	FUSE, MDL, 3 AMP, 32V	0896660001
J1	CONNECTOR, PCB, 100 PIN	1013190025
J2	CONNECTOR, DB-9, FEMALE RT ANG	1012550028
J3	CONNECTOR, PC, 2 PIN HEADER	1008060011
K201	RELAY, PHOTOMOS, 40V,2A	1012550036
K202	RELAY, PHOTOMOS, 40V,2A	1012550036
K203	RELAY, PHOTOMOS, 40V,2A	1012550036
K204	RELAY, PHOTOMOS, 40V,2A	1012550036
K205	RELAY, PHOTOMOS, 40V,2A	1012550036
K206	RELAY, PHOTOMOS, 40V,2A	1012550036
K207	RELAY, PHOTOMOS, 40V,2A	1012550036
K208	RELAY, PHOTOMOS, 40V,2A	1012550036
K209	RELAY, PHOTOMOS, 40V,2A	1012550036
K210	RELAY, PHOTOMOS, 40V,2A	1012550036
K211	RELAY, PHOTOMOS, 40V,2A	1012550036
K212	RELAY, PHOTOMOS, 40V,2A	1012550036
K213	RELAY, PHOTOMOS, 40V,2A	1012550036
K214	RELAY, PHOTOMOS, 40V,2A	1012550036
K215	RELAY, PHOTOMOS, 40V,2A	1012550036
K216	RELAY, PHOTOMOS, 40V,2A	1012550036
K301	RELAY, PHOTOMOS, 40V,2A	1012550036
K302	RELAY, PHOTOMOS, 40V,2A	1012550036
K303	RELAY, PHOTOMOS, 40V,2A	1012550036
K304	RELAY, PHOTOMOS, 40V,2A	1012550036
K305	RELAY, PHOTOMOS, 40V,2A	1012550036
K306	RELAY, PHOTOMOS, 40V,2A	1012550036
K307	RELAY, PHOTOMOS, 40V,2A	1012550036
K308	RELAY, PHOTOMOS, 40V,2A	1012550036
K309	RELAY, PHOTOMOS, 40V,2A	1012550036
K310	RELAY, PHOTOMOS, 40V,2A	1012550036

K311	RELAY, PHOTOMOS, 40V,2A	1012550036
K312	RELAY, PHOTOMOS, 40V,2A	1012550036
K313	RELAY, PHOTOMOS, 40V,2A	1012550036
K314	RELAY, PHOTOMOS, 40V,2A	1012550036
K315	RELAY, PHOTOMOS, 40V,2A	1012550036
K316	RELAY, PHOTOMOS, 40V,2A	1012550036
K401	RELAY, PHOTOMOS, 40V,2A	1012550036
K402	RELAY, PHOTOMOS, 40V,2A	1012550036
K403	RELAY, PHOTOMOS, 40V,2A	1012550036
K404	RELAY, PHOTOMOS, 40V,2A	1012550036
K405	RELAY, PHOTOMOS, 40V,2A	1012550036
K406	RELAY, PHOTOMOS, 40V,2A	1012550036
K407	RELAY, PHOTOMOS, 40V,2A	1012550036
K408	RELAY, PHOTOMOS, 40V,2A	1012550036
K409	RELAY, PHOTOMOS, 40V,2A	1012550036
K410	RELAY, PHOTOMOS, 40V,2A	1012550036
K411	RELAY, PHOTOMOS, 40V,2A	1012550036
K412	RELAY, PHOTOMOS, 40V,2A	1012550036
K413	RELAY, PHOTOMOS, 40V,2A	1012550036
K414	RELAY, PHOTOMOS, 40V,2A	1012550036
K415	RELAY, PHOTOMOS, 40V,2A	1012550036
K416	RELAY, PHOTOMOS, 40V,2A	1012550036
K417	RELAY, PHOTOMOS, 40V,2A	1012550036
K418	RELAY, PHOTOMOS, 40V,2A	1012550036
K419	RELAY, PHOTOMOS, 40V,2A	1012550036
K420	RELAY, PHOTOMOS, 40V,2A	1012550036
K421	RELAY, PHOTOMOS, 40V,2A	1012550036
K422	RELAY, PHOTOMOS, 40V,2A	1012550036
K423	RELAY, PHOTOMOS, 40V,2A	1012550036
K424	RELAY, PHOTOMOS, 40V,2A	1012550036
K501	RELAY, PHOTOMOS, 40V,2A	1012550036
K502	RELAY, PHOTOMOS, 40V,2A	1012550036
K503	RELAY, PHOTOMOS, 40V,2A	1012550036
K504	RELAY, PHOTOMOS, 40V,2A	1012550036
K505	RELAY, PHOTOMOS, 40V,2A	1012550036
K506	RELAY, PHOTOMOS, 40V,2A	1012550036
K507	RELAY, PHOTOMOS, 40V,2A	1012550036
K508	RELAY, PHOTOMOS, 40V,2A	1012550036
K601	RELAY, PHOTOMOS, 40V,2A	1012550036
K602	RELAY, PHOTOMOS, 40V,2A	1012550036
K603	RELAY, PHOTOMOS, 40V,2A	1012550036
K604	RELAY, PHOTOMOS, 40V,2A	1012550036
K605	RELAY, PHOTOMOS, 40V,2A	1012550036
K606	RELAY, PHOTOMOS, 40V,2A	1012550036
K607	RELAY, PHOTOMOS, 40V,2A	1012550036
K608	RELAY, PHOTOMOS, 40V,2A	1012550036
P1	CONNECTOR, DB-9, FEMALE RT ANG	1012550028
R1	RESISTOR 4.7K, 5%, 1/4W	0170770001
R2	RESISTOR 1K, 5%, 1/8W	1010801023
R3	RESISTOR 27K, 5%, 1/8W	1010802739
R4	RESISTOR 27K, 5%, 1/8W	1010802739
R5	RESISTOR 2.2K, 5%, 1/8W	1010802224
R6	RESISTOR 22K, 5%, 1/8W	1010802232
R7	RESISTOR 3.9K, 5%, 1/8W	1010803921
R201	RESISTOR 680, 5%, 1/8W	1010806815
R202	RESISTOR 680, 5%, 1/8W	1010806815
R203	RESISTOR 680, 5%, 1/8W	1010806815
R204	RESISTOR 680, 5%, 1/8W	1010806815
R205	RESISTOR 680, 5%, 1/8W	1010806815
R206	RESISTOR 680, 5%, 1/8W	1010806815
R207	RESISTOR 680, 5%, 1/8W	1010806815
R208	RESISTOR 680, 5%, 1/8W	1010806815

R209	RESISTOR 680, 5%, 1/8W	1010806815
R210	RESISTOR 680, 5%, 1/8W	1010806815
R211	RESISTOR 680, 5%, 1/8W	1010806815
R212	RESISTOR 680, 5%, 1/8W	1010806815
R213	RESISTOR 680, 5%, 1/8W	1010806815
R214	RESISTOR 680, 5%, 1/8W	1010806815
R215	RESISTOR 680, 5%, 1/8W	1010806815
R216	RESISTOR 680, 5%, 1/8W	1010806815
R217	RESISTOR 470, 10%, 2W	0163580006
R218	RESISTOR 10K, 5%, 1/8W	1010801031
R219	RESISTOR 10K, 5%, 1/8W	1010801031
R220	RESISTOR 470, 10%, 2W	0163580006
R221	RESISTOR 470, 10%, 2W	0163580006
R222	RESISTOR 470, 10%, 2W	0163580006
R223	RESISTOR 470, 10%, 2W	0163580006
R224	RESISTOR 470, 10%, 2W	0163580006
R225	RESISTOR 470, 10%, 2W	0163580006
R301	RESISTOR 680, 5%, 1/8W	1010806815
R302	RESISTOR 680, 5%, 1/8W	1010806815
R303	RESISTOR 680, 5%, 1/8W	1010806815
R304	RESISTOR 680, 5%, 1/8W	1010806815
R305	RESISTOR 680, 5%, 1/8W	1010806815
R306	RESISTOR 680, 5%, 1/8W	1010806815
R307	RESISTOR 680, 5%, 1/8W	1010806815
R308	RESISTOR 680, 5%, 1/8W	1010806815
R309	RESISTOR 680, 5%, 1/8W	1010806815
R310	RESISTOR 680, 5%, 1/8W	1010806815
R311	RESISTOR 680, 5%, 1/8W	1010806815
R312	RESISTOR 680, 5%, 1/8W	1010806815
R313	RESISTOR 680, 5%, 1/8W	1010806815
R314	RESISTOR 680, 5%, 1/8W	1010806815
R315	RESISTOR 680, 5%, 1/8W	1010806815
R316	RESISTOR 680, 5%, 1/8W	1010806815
R401	RESISTOR 680, 5%, 1/8W	1010806815
R402	RESISTOR 680, 5%, 1/8W	1010806815
R403	RESISTOR 680, 5%, 1/8W	1010806815
R404	RESISTOR 680, 5%, 1/8W	1010806815
R405	RESISTOR 680, 5%, 1/8W	1010806815
R406	RESISTOR 680, 5%, 1/8W	1010806815
R407	RESISTOR 680, 5%, 1/8W	1010806815
R408	RESISTOR 680, 5%, 1/8W	1010806815
R409	RESISTOR 680, 5%, 1/8W	1010806815
R410	RESISTOR 680, 5%, 1/8W	1010806815
R411	RESISTOR 680, 5%, 1/8W	1010806815
R412	RESISTOR 680, 5%, 1/8W	1010806815
R413	RESISTOR 680, 5%, 1/8W	1010806815
R414	RESISTOR 680, 5%, 1/8W	1010806815
R415	RESISTOR 680, 5%, 1/8W	1010806815
R416	RESISTOR 680, 5%, 1/8W	1010806815
R417	RESISTOR 680, 5%, 1/8W	1010806815
R418	RESISTOR 680, 5%, 1/8W	1010806815
R419	RESISTOR 680, 5%, 1/8W	1010806815
R420	RESISTOR 680, 5%, 1/8W	1010806815
R421	RESISTOR 680, 5%, 1/8W	1010806815
R422	RESISTOR 680, 5%, 1/8W	1010806815
R423	RESISTOR 680, 5%, 1/8W	1010806815
R424	RESISTOR 680, 5%, 1/8W	1010806815
R425	RESISTOR 470, 10%, 2W	0163580006
R426	RESISTOR 10K, 5%, 1/8W	1010801031
R427	RESISTOR 10K, 5%, 1/8W	1010801031
R428	RESISTOR 470, 10%, 2W	0163580006
R429	RESISTOR 470, 10%, 2W	0163580006

R501	RESISTOR 680, 5%, 1/8W	1010806815
R502	RESISTOR 680, 5%, 1/8W	1010806815
R503	RESISTOR 680, 5%, 1/8W	1010806815
R504	RESISTOR 680, 5%, 1/8W	1010806815
R505	RESISTOR 680, 5%, 1/8W	1010806815
R506	RESISTOR 680, 5%, 1/8W	1010806815
R507	RESISTOR 680, 5%, 1/8W	1010806815
R508	RESISTOR 680, 5%, 1/8W	1010806815
R509	RESISTOR 680, 5%, 1/8W	1010806815
R510	RESISTOR 680, 5%, 1/8W	1010806815
R511	RESISTOR 680, 5%, 1/8W	1010806815
R512	RESISTOR 680, 5%, 1/8W	1010806815
R513	RESISTOR 680, 5%, 1/8W	1010806815
R514	RESISTOR 680, 5%, 1/8W	1010806815
R515	RESISTOR 680, 5%, 1/8W	1010806815
R516	RESISTOR 680, 5%, 1/8W	1010806815
R517	RESISTOR 10K, 5%, 1/8W	1010801031
R518	RESISTOR 10K, 5%, 1/8W	1010801031
R519	RESISTOR 10K, 5%, 1/8W	1010801031
R520	RESISTOR 10K, 5%, 1/8W	1010801031
R601	RESISTOR 680, 5%, 1/8W	1010806815
R602	RESISTOR 680, 5%, 1/8W	1010806815
R603	RESISTOR 680, 5%, 1/8W	1010806815
R604	RESISTOR 680, 5%, 1/8W	1010806815
R605	RESISTOR 680, 5%, 1/8W	1010806815
R606	RESISTOR 680, 5%, 1/8W	1010806815
R607	RESISTOR 680, 5%, 1/8W	1010806815
R608	RESISTOR 680, 5%, 1/8W	1010806815
R609	RESISTOR 1.8K, 5%, 1/8W	1010801821
R610	RESISTOR 1K, 5%, 1/8W	1010801023
R611	RESISTOR 5.6K, 5%, 1/8W	1010805622
R612	RESISTOR 1K, 5%, 1/8W	1010801023
R613	RESISTOR 1K, 5%, 1/8W	1010801023
R614	RESISTOR 0.0, 0%, 1/4W	1011600021
R615	RESISTOR 0.0, 0%, 1/4W	1011600021
R616	RESISTOR 0.0, 0%, 1/4W	1011600021
R617	RESISTOR 0.0, 0%, 1/4W	1011600021
R618	RESISTOR 0.0, 0%, 1/4W	1011600021
R619	RESISTOR 0.0, 0%, 1/4W	1011600021
R620	RESISTOR 0.0, 0%, 1/4W	1011600021
R621	RESISTOR 0.0, 0%, 1/4W	1011600021
R622	RESISTOR 0.0, 0%, 1/4W	1011600021
R623	RESISTOR 4.7K, 5%, 1/8W	1010804723
R624	RESISTOR 4.7K, 5%, 1/8W	1010804723
S116	SWITCH, TOGGLE, SPDT	1011790033
S601	SWITCH, TOGGLE, SPDT	1011790033
S602	SWITCH, PUSH BUTTON, SQUARE	1013270029
U1	IC DIGITAL, MAX 490	1013240022
U2	IC. DIGITAL ICL232	1010510011
U201	IC,DIGITAL, UCN5842A	1012530035
U202	IC,DIGITAL, UCN5842A	1012530035
U203	IC. LINEAR LM2903	1011410036
U301	IC,DIGITAL, UCN5842A	1012530035
U302	IC,DIGITAL, UCN5842A	1012530035
U401	IC. LINEAR LM2903	1011410036
U402	IC,DIGITAL, UCN5842A	1012530035
U403	IC,DIGITAL, UCN5842A	1012530035
U404	IC,DIGITAL, UCN5842A	1012530035
U501	IC,DIGITAL, UCN5842A	1012530035
U502	IC,DIGITAL, UCN5842A	1012530035
U601	IC,DIGITAL, UCN5842A	1012530035
U602	IC DIGITAL 74HC589	1013250028

Figure 6.1.3.1 PC Assembly, Test Fixture, CU-9150 CPU, page 1/8.

U603	IC DIGITAL 74HC589	1013250028
U604	IC. DIGITAL 74HC04	1010280023
U606	IC. LINEAR LM340T5	0448600005
XJ3	CONNECTOR, BLOCK, 2 PIN FEM	1008060038
	FUSECLIP, PC MOUNT	0534610005
	BACKPLANE, CU-9150 CPU FIXTURE	8120031806
	EPROM W/CU9150 CPU TF SOFTWARE	8120034091

P2213C

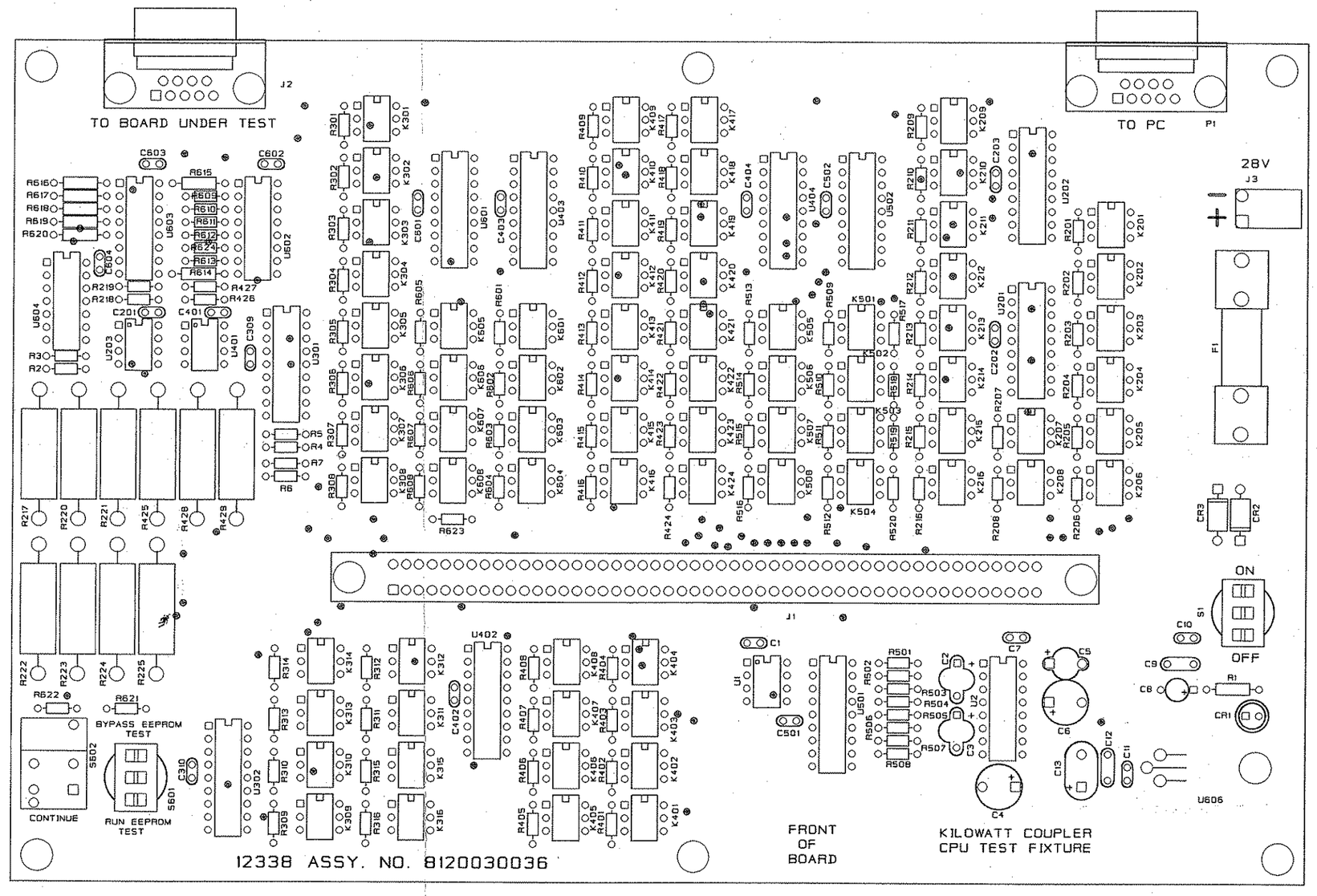

Figure 6.1.3.1 PC Assembly, Test Fixture, CU-9150 CPU, page 2/8.

A2213A

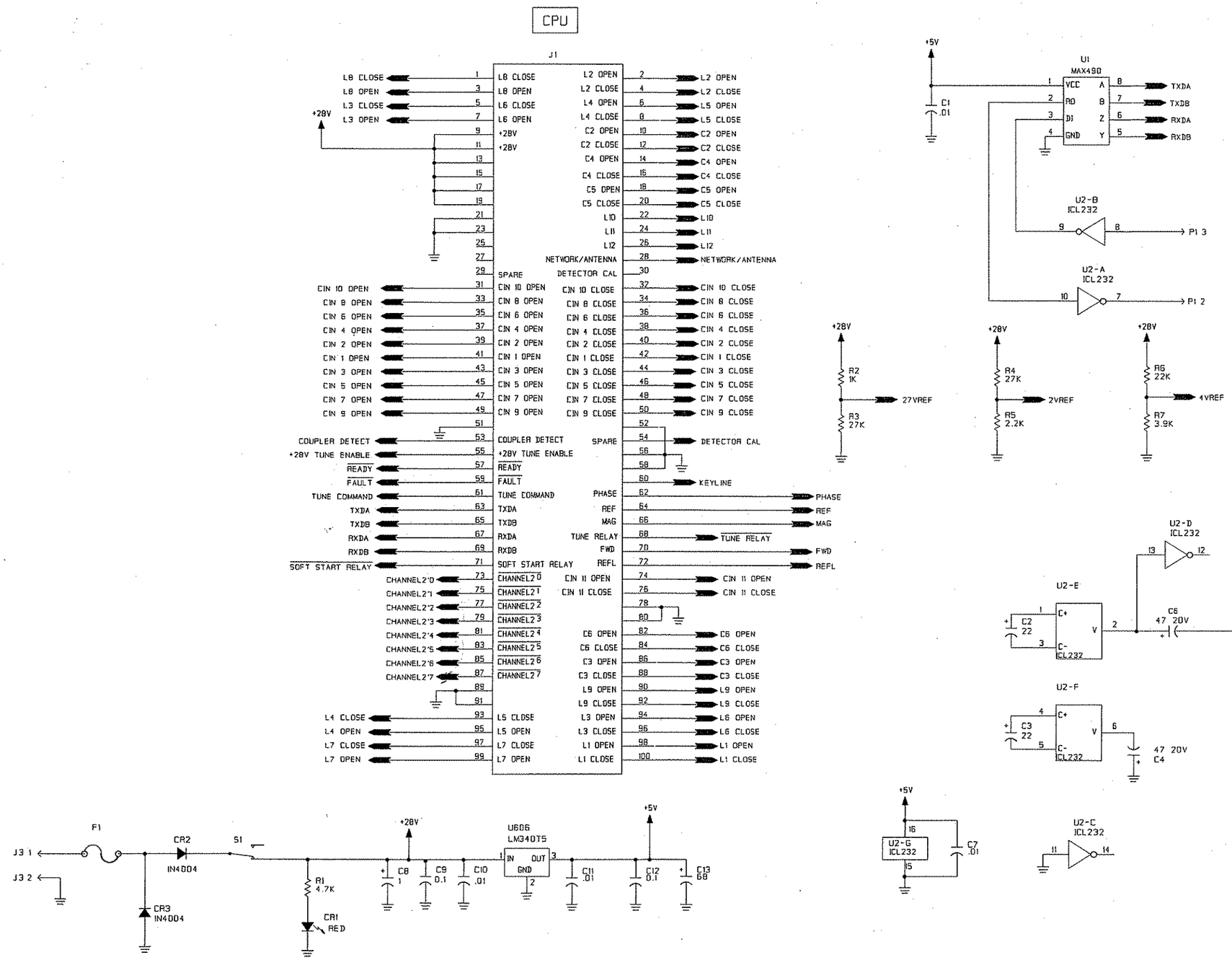

Figure 6.1.3.1 PC Assembly, Test Fixture, CU-9150 CPU, page 3/8.

B2213A

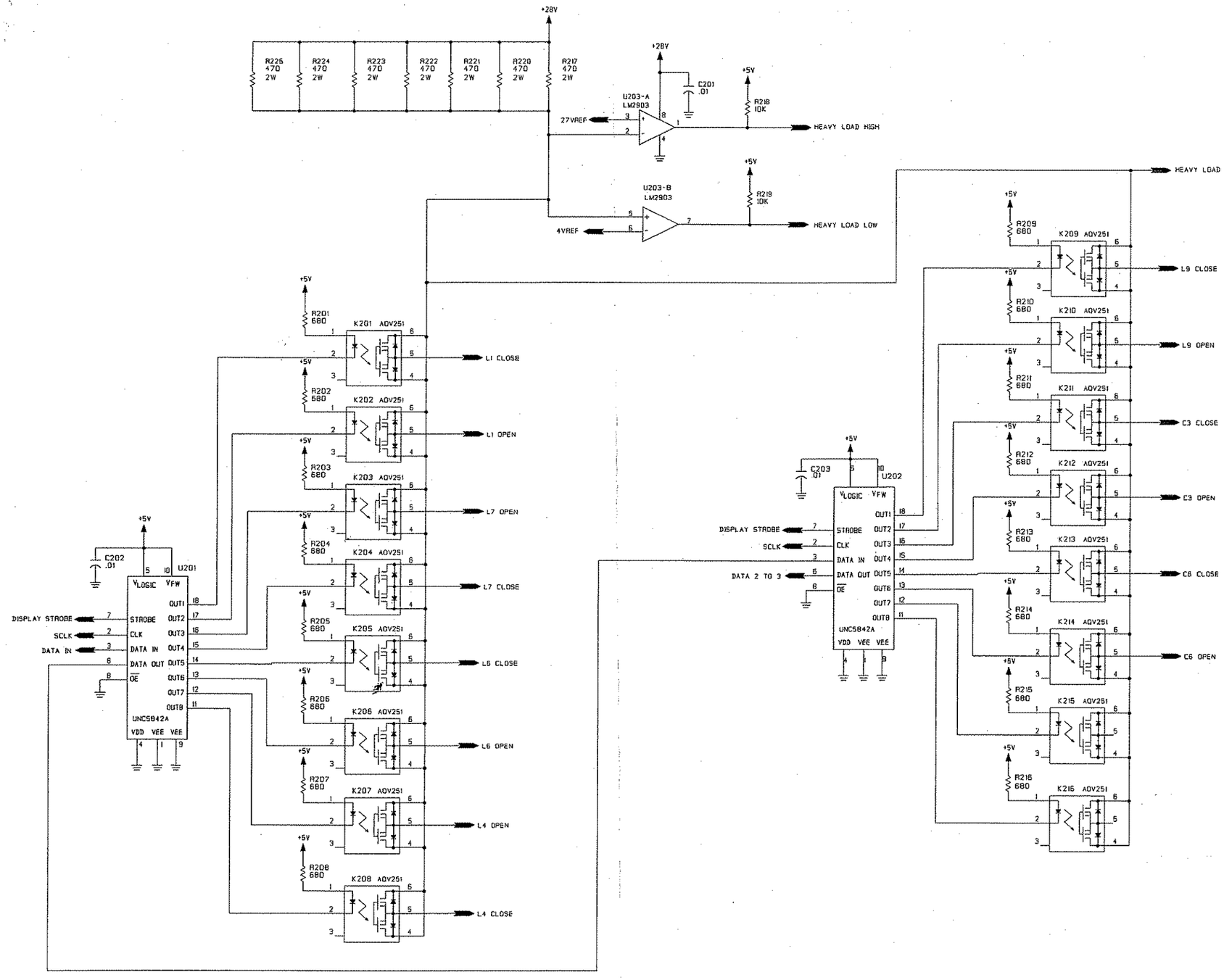

Figure 6.1.3.1 PC Assembly, Test Fixture, CU-9150 CPU, page 4/8.

C2213A

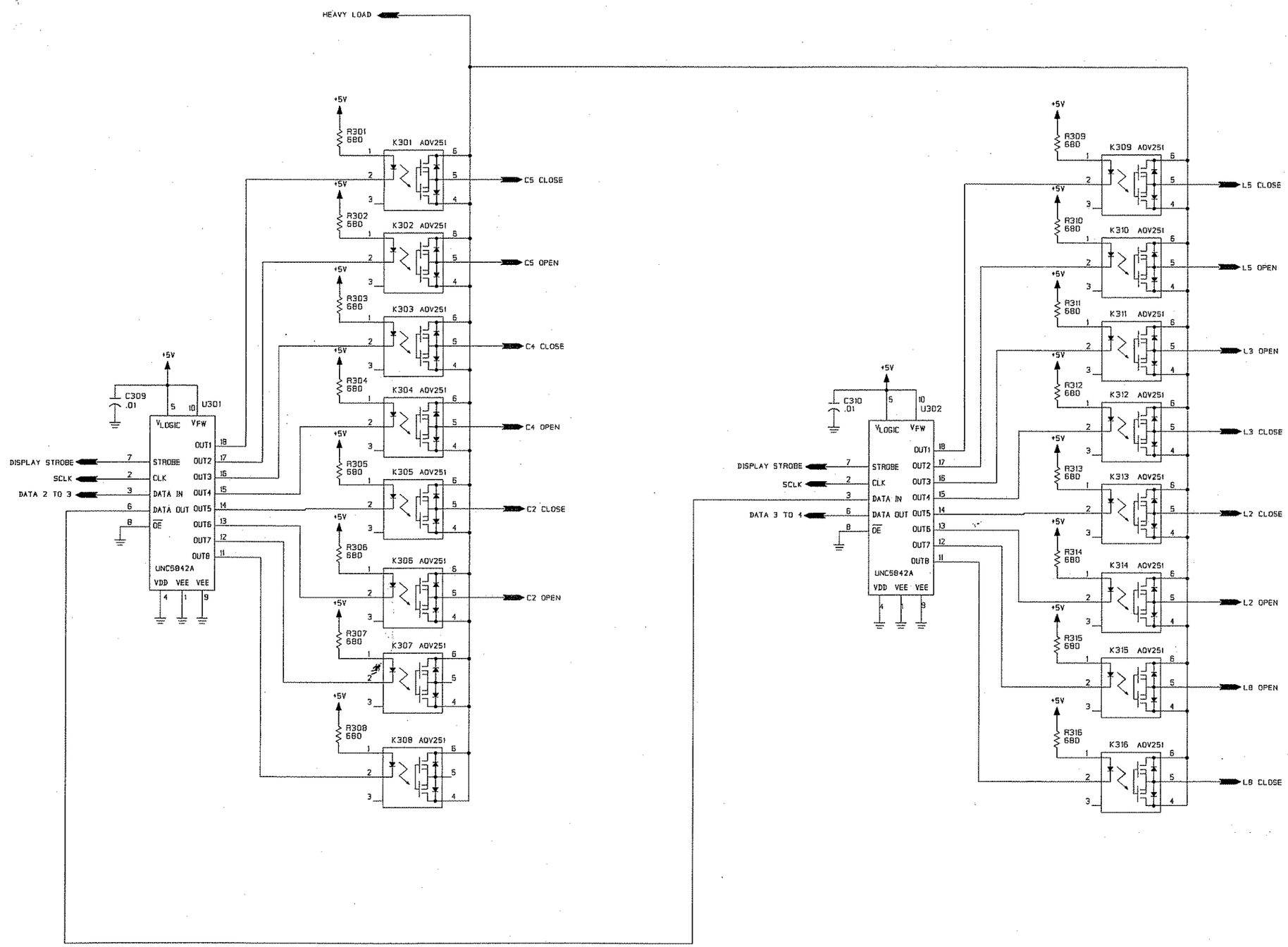

Figure 6.1.3.1 PC Assembly, Test Fixture, CU-9150 CPU, page 5/8.

D2213A

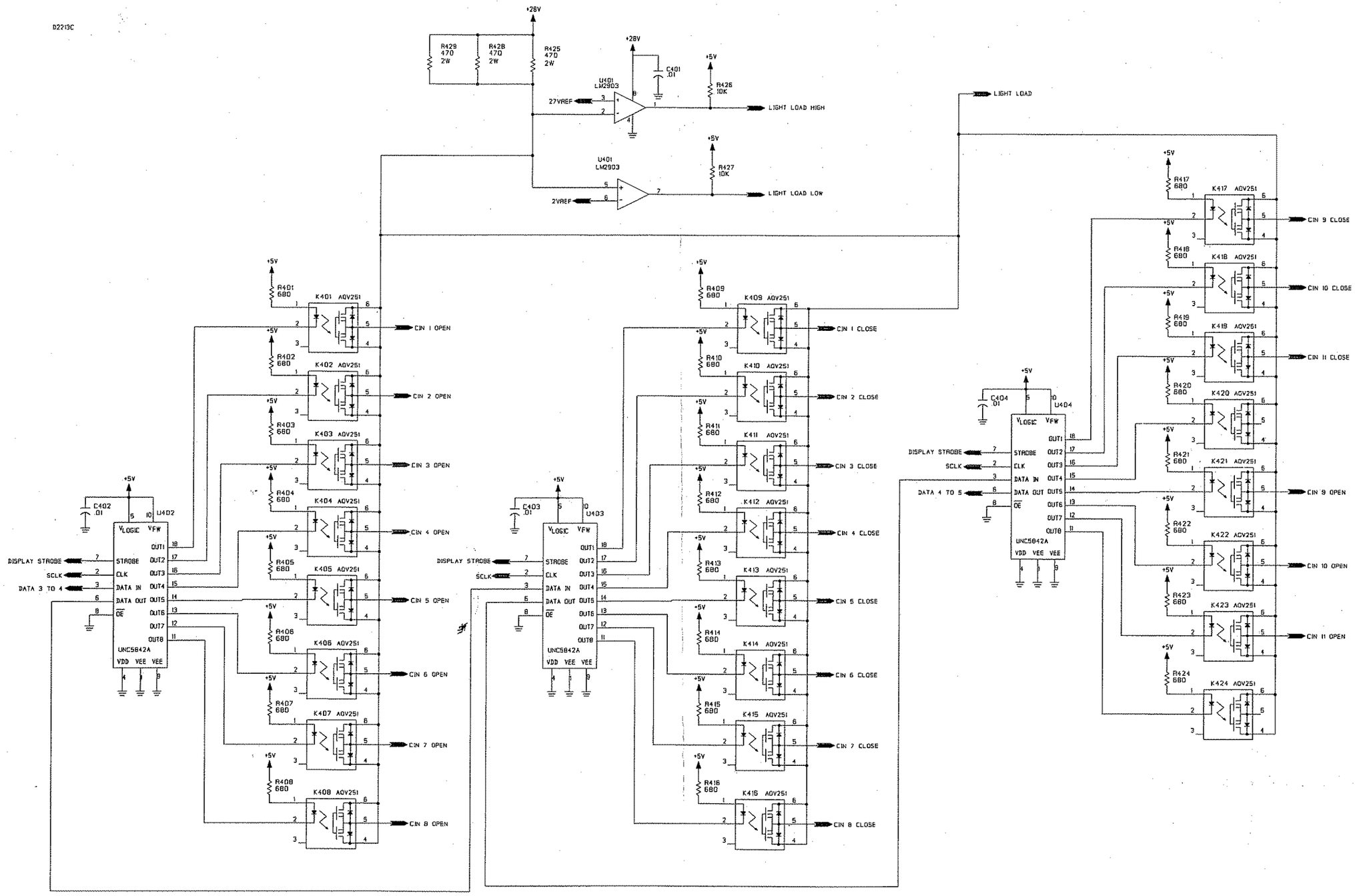

Figure 6.1.3.1 PC Assembly, Test Fixture, CU-9150 CPU, page 6/8.

E2213A

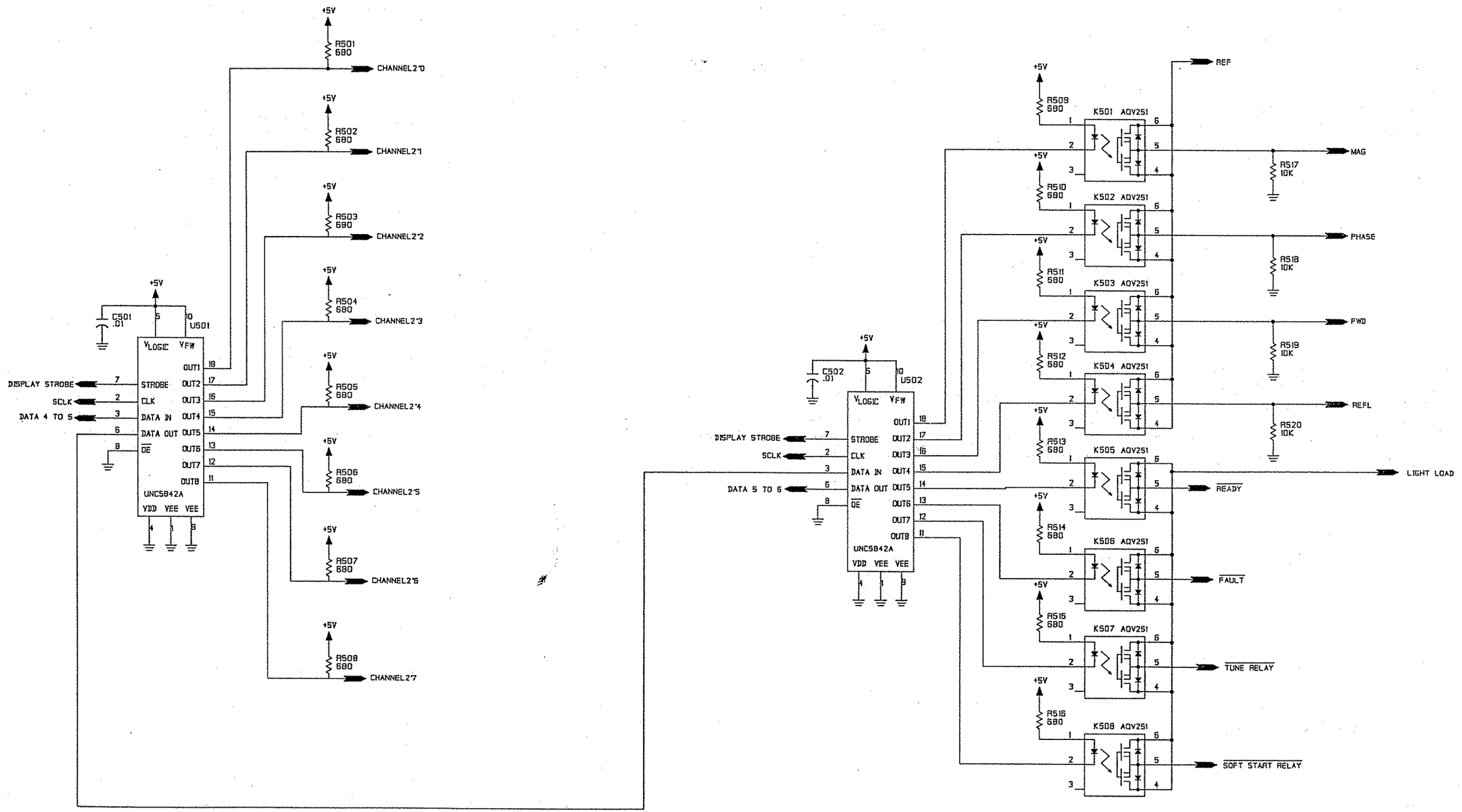

Figure 6.1.3.1 PC Assembly, Test Fixture, CU-9150 CPU, page 7/8.

F2213A

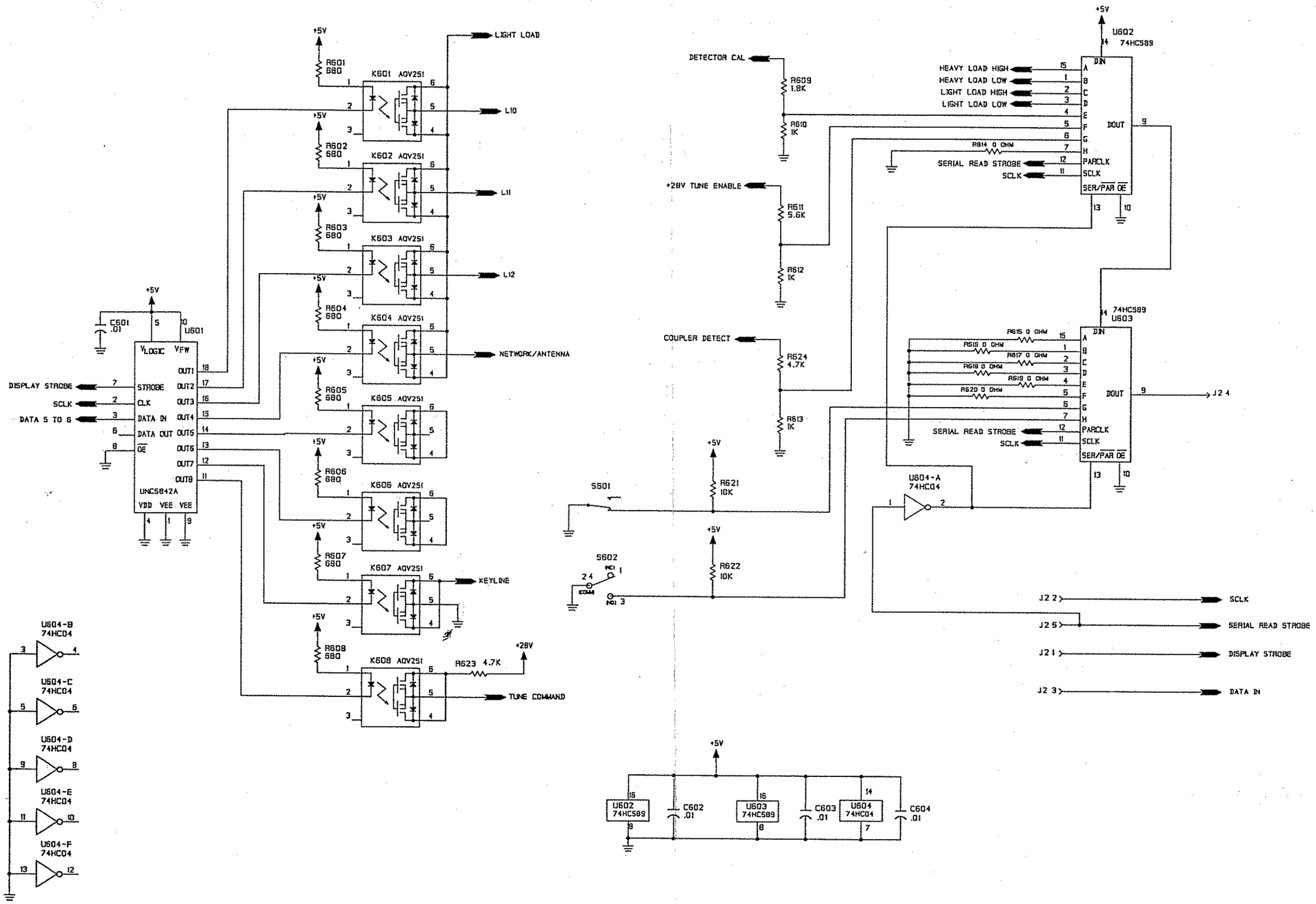

Figure 6.1.3.1 PC Assembly, Test Fixture, CU-9150 CPU, page 8/8.

PC ASSEMBLY, SERIAL BREAKOUT BOARD

	PC ASSY,SERIAL BREAKOUT	**8120037090**
C1	CAP. 1UF, 35V	0281660000
C2	CAP. 0.01UF, 50V, X7R, 20%	0281730008
C3	CAP. 0.01UF, 50V, X7R, 20%	0281730008
C4	CAP. 68UF, 15V	0296540005
C5	CAP. 22UF, 15V	0281690006
C6	CAP. 47UF, 20V	0281700001
C7	CAP. 10UF, 20V	1007290005
C8	CAP. 22UF, 15V	0281690006
C9	CAP. 47UF, 20V	0281700001
C10	CAP. 0.01UF, 50V, X7R, 20%	0281730008
C11	CAP. 0.01UF, 50V, X7R, 20%	0281730008
C12	CAP. 0.01UF, 50V, X7R, 20%	0281730008
C13	CAP. 0.01UF, 50V, X7R, 20%	0281730008
C14	CAP. 0.01UF, 50V, X7R, 20%	0281730008
C15	CAP. 0.01UF, 50V, X7R, 20%	0281730008
C16	CAP. 0.01UF, 50V, X7R, 20%	0281730008
C17	CAP. 0.01UF, 50V, X7R, 20%	0281730008
C18	CAP. 0.01UF, 50V, X7R, 20%	0281730008
C19	CAP. 0.01UF, 50V, X7R, 20%	0281730008
J1	CONNECTOR, POWER, 37 PIN ROUND	1009330004
J2	CONNECTOR, POWER, 24 PIN ROUND	1008320013
J3	CONNECTOR, POWER, 39 PIN FEM	1012920038
J5	CONNECTOR, DB-25 STRAIGHT, FEM	1012780031
L1	INDUCTOR, MOLDED, 10UH, 5%	0650240006
L2	INDUCTOR, MOLDED, 8.2UH, 5%	0652060005
L3	INDUCTOR, MOLDED, 8.2UH, 5%	0652060005
L4	INDUCTOR, MOLDED, 8.2UH, 5%	0652060005
L5	INDUCTOR, MOLDED, 8.2UH, 5%	0652060005
R1	RESISTOR 560, 5%, 1/8W	1010805614
U1	IC. LINEAR LM340T5	0448600005
U2	IC DIGITAL, MAX 490	1013240022
U3	IC. DIGITAL ICL232	1010510011

P2204A

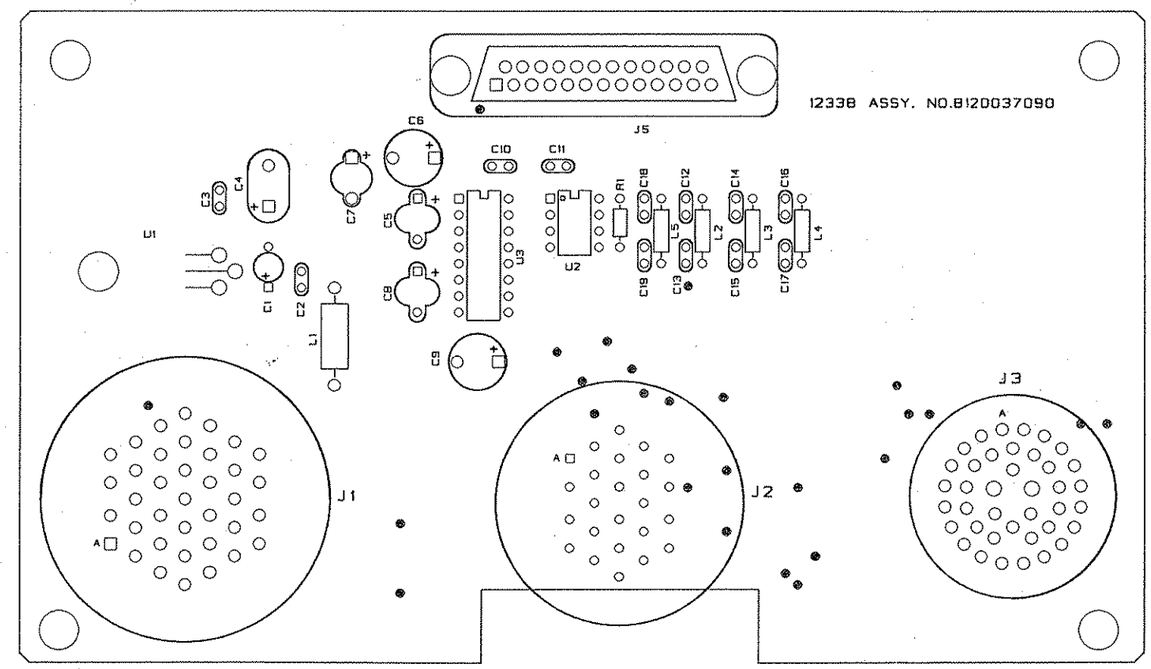

Figure 6.1.3.2 PC Assembly, Serial Breakout Board, page 1/2.

A2204A

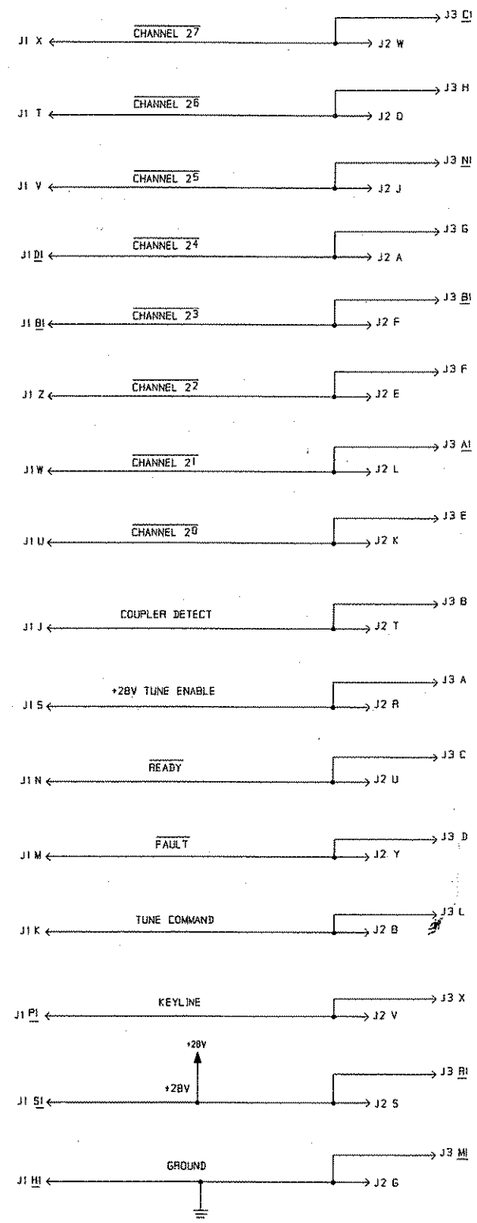

NOTE:
UNDERSCORED CHARACTERS REPRESENT LOWER CASE LETTERS.

LAST USED
C15
L32
J2
R1

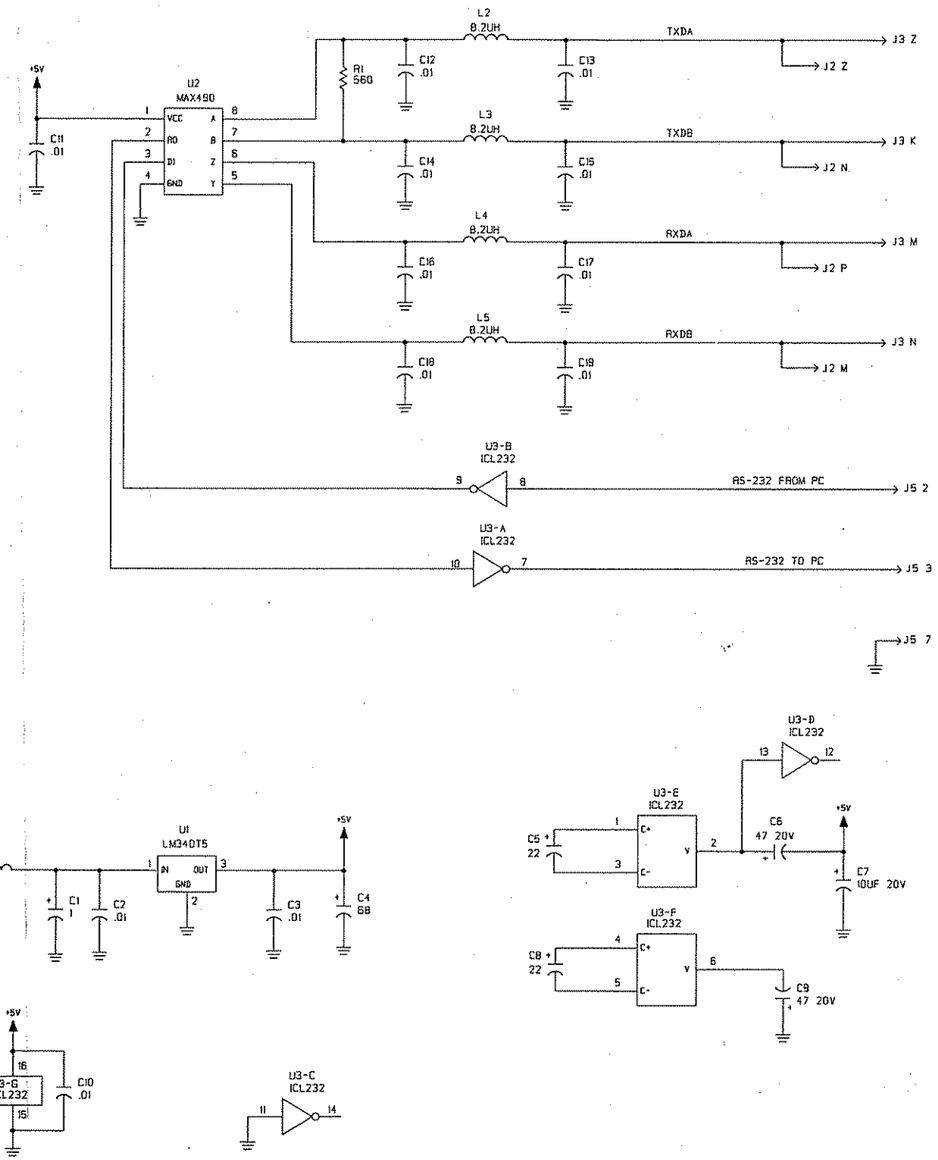

Figure 6.1.3.2 PC Assembly, Serial Breakout Board, page 2/2.

PC ASSEMBLY, DISPLAY BOARD

	PC ASSY, DISPLAY BOARD	**8120039092**
C101	CAP. 0.01UF, 50V, X7R, 20%	0281730008
C102	CAP. 0.01UF, 50V, X7R, 20%	0281730008
C103	CAP. 0.1UF, 50V, X7R	1011180014
C104	CAP. 0.1UF, 50V, X7R	1011180014
C113	CAP. 47UF, 35V	0282190007
C114	CAP. 1000UF, 35V, 105C	1011420031
C115	CAP. 0.1UF, 50V, X7R	1011180014
C118	CAP. 0.01UF, 50V, X7R, 20%	0281730008
C119	CAP. 0.01UF, 50V, X7R, 20%	0281730008
C120	CAP. 0.01UF, 50V, X7R, 20%	0281730008
C121	CAP. 0.01UF, 50V, X7R, 20%	0281730008
C122	CAP. 0.01UF, 50V, X7R, 20%	0281730008
C123	CAP. 0.01UF, 50V, X7R, 20%	0281730008
C201	CAP. 0.01UF, 50V, X7R, 20%	0281730008
C202	CAP. 0.01UF, 50V, X7R, 20%	0281730008
C203	CAP. 0.01UF, 50V, X7R, 20%	0281730008
C204	CAP. 0.01UF, 50V, X7R, 20%	0281730008
C205	CAP. 0.01UF, 50V, X7R, 20%	0281730008
C206	CAP. 0.01UF, 50V, X7R, 20%	0281730008
C207	CAP. 0.01UF, 50V, X7R, 20%	0281730008
C301	CAP. 0.01UF, 50V, X7R, 20%	0281730008
C302	CAP. 0.01UF, 50V, X7R, 20%	0281730008
C303	CAP. 0.01UF, 50V, X7R, 20%	0281730008
C304	CAP. 0.01UF, 50V, X7R, 20%	0281730008
C305	CAP. 0.01UF, 50V, X7R, 20%	0281730008
C306	CAP. 0.01UF, 50V, X7R, 20%	0281730008
C401	CAP. 0.01UF, 50V, X7R, 20%	0281730008
C402	CAP. 0.01UF, 50V, X7R, 20%	0281730008
C403	CAP. 0.01UF, 50V, X7R, 20%	0281730008
C404	CAP. 0.01UF, 50V, X7R, 20%	0281730008
C501	CAP. 0.01UF, 50V, X7R, 20%	0281730008
C502	CAP. 0.01UF, 50V, X7R, 20%	0281730008
C503	CAP. 0.01UF, 50V, X7R, 20%	0281730008
C504	CAP. 0.01UF, 50V, X7R, 20%	0281730008
C601	CAP. 0.01UF, 50V, X7R, 20%	0281730008
C602	CAP. 0.01UF, 50V, X7R, 20%	0281730008
C603	CAP. 0.01UF, 50V, X7R, 20%	0281730008
C604	CAP. 0.01UF, 50V, X7R, 20%	0281730008
C605	CAP. 0.01UF, 50V, X7R, 20%	0281730008
C701	CAP. 0.01UF, 50V, X7R, 20%	0281730008
C702	CAP. 0.01UF, 50V, X7R, 20%	0281730008
C703	CAP. 0.01UF, 50V, X7R, 20%	0281730008
C704	CAP. 0.01UF, 50V, X7R, 20%	0281730008
C705	CAP. 0.01UF, 50V, X7R, 20%	0281730008
CR101	DIODE, RECTIFIER 1N5822	1010630032
CR102	DIODE, ZENER 1N5343B	1003060005
CR201	DIODE, LED, RED MV5754A	1004350023
CR202	DIODE, LED, RED MV5754A	1004350023
CR203	DIODE, LED, RED MV5754A	1004350023
CR204	DIODE, LED, RED MV5754A	1004350023
CR205	DIODE, LED, RED MV5754A	1004350023
CR206	DIODE, LED, RED MV5754A	1004350023
CR207	DIODE, LED, RED MV5754A	1004350023
CR208	DIODE, LED, RED MV5754A	1004350023
CR209	DIODE, LED, RED MV5754A	1004350023
CR210	DIODE, LED, RED MV5754A	1004350023
CR211	DIODE, LED, RED MV5754A	1004350023
CR301	DIODE, LED, RED MV5754A	1004350023
CR302	DIODE, LED, RED MV5754A	1004350023
CR303	DIODE, LED, RED MV5754A	1004350023
CR304	DIODE, LED, RED MV5754A	1004350023

CR305	DIODE, LED, RED MV5754A	1004350023
CR306	DIODE, LED, RED MV5754A	1004350023
CR307	DIODE, LED, RED MV5754A	1004350023
CR308	DIODE, LED, RED MV5754A	1004350023
CR309	DIODE, LED, RED MV5754A	1004350023
CR401	DIODE, LED, RED MV5754A	1004350023
CR402	DIODE, LED, RED MV5754A	1004350023
CR403	DIODE, LED, RED MV5754A	1004350023
CR404	DIODE, LED, RED MV5754A	1004350023
CR405	DIODE, LED, RED MV5754A	1004350023
CR406	DIODE, LED, RED MV5754A	1004350023
CR407	DIODE, LED, GREEN MV5454A	1004350015
CR501	DIODE, LED, RED MV5754A	1004350023
CR502	DIODE, LED, RED MV5754A	1004350023
CR503	DIODE, LED, RED MV5754A	1004350023
CR504	DIODE, LED, RED MV5754A	1004350023
DSP101	DIODE, LED, 7 SEGMENT, .4 IN	1013300025
DSP102	DIODE, LED, 7 SEGMENT, .4 IN	1013300025
DSP201	DIODE, LED, 7 SEGMENT, .4 IN	1013300025
DSP202	DIODE, LED, 7 SEGMENT, .4 IN	1013300025
DSP203	DIODE, LED, 7 SEGMENT, .4 IN	1013300025
DSP204	DIODE, LED, 7 SEGMENT, .4 IN	1013300025
DSP205	DIODE, LED, 7 SEGMENT, .4 IN	1013300025
DSP301	DIODE, LED, 7 SEGMENT, .4 IN	1013300025
DSP302	DIODE, LED, 7 SEGMENT, .4 IN	1013300025
DSP303	DIODE, LED, 7 SEGMENT, .4 IN	1013300025
DSP304	DIODE, LED, 7 SEGMENT, .4 IN	1013300025
DSP401	DIODE, LED, 7 SEGMENT, .4 IN	1013300025
DSP402	DIODE, LED, 7 SEGMENT, .4 IN	1013300025
DSP403	DIODE, LED, 7 SEGMENT, .4 IN	1013300025
DSP501	DIODE, LED, 7 SEGMENT, .4 IN	1013300025
DSP502	DIODE, LED, 7 SEGMENT, .4 IN	1013300025
DSP503	DIODE, LED, 7 SEGMENT, .4 IN	1013300025
DSP601	DIODE, LED, 7 SEGMENT, .4 IN	1013300025
DSP602	DIODE, LED, 7 SEGMENT, .4 IN	1013300025
DSP603	DIODE, LED, 7 SEGMENT, .4 IN	1013300025
DSP604	DIODE, LED, 7 SEGMENT, .4 IN	1013300025
DSP605	DIODE, LED, 7 SEGMENT, .4 IN	1013300025
DSP701	DIODE, LED, 7 SEGMENT, .4 IN	1013300025
DSP702	DIODE, LED, 7 SEGMENT, .4 IN	1013300025
DSP703	DIODE, LED, 7 SEGMENT, .4 IN	1013300025
DSP704	DIODE, LED, 7 SEGMENT, .4 IN	1013300025
DSP705	DIODE, LED, 7 SEGMENT, .4 IN	1013300025
L102	INDUCTOR, MOLDED, 1.0UH, 5%	0648360008
L107	INDUCTOR, TOROID, 150UH	1010650033
L108	INDUCTOR, MOLDED, 0.12UH, 5%	1011500027
R101	RESISTOR 1.65K, 1%, 1/8W	1008490032
R102	RESISTOR 1K, 1%, 1/8W	1011380005
RP201	RES NTWK 8 PIN SIP 68 ISO	1006580026
RP202	RES NTWK 8 PIN SIP 68 ISO	1006580026
RP203	RES NTWK 8 PIN SIP 68 ISO	1006580026
RP204	RES NTWK 8 PIN SIP 68 ISO	1006580026
RP205	RES NTWK 8 PIN SIP 68 ISO	1006580026
RP206	RES NTWK 8 PIN SIP 68 ISO	1006580026
RP207	RES NTWK 8 PIN SIP 68 ISO	1006580026
RP208	RES NTWK 8 PIN SIP 68 ISO	1006580026
RP209	RES NTWK 8 PIN SIP 68 ISO	1006580026
RP210	RES NTWK 8 PIN SIP 68 ISO	1006580026
RP211	RES NTWK 8 PIN SIP 68 ISO	1006580026
RP212	RES NTWK 8 PIN SIP 68 ISO	1006580026
RP213	RES NTWK 8 PIN SIP 68 ISO	1006580026
RP214	RES NTWK 10 PIN SIP 10K COM	1006130021

RP215	RES NTWK 10 PIN SIP 10K COM	1006130021
RP216	RES NTWK 10 PIN SIP 10K COM	1006130021
RP217	RES NTWK 8 PIN SIP 68 ISO	1006580026
RP218	RES NTWK 8 PIN SIP 68 ISO	1006580026
RP219	RES NTWK 8 PIN SIP 68 ISO	1006580026
RP220	RES NTWK 8 PIN SIP 68 ISO	1006580026
RP301	RES NTWK 8 PIN SIP 68 ISO	1006580026
RP302	RES NTWK 8 PIN SIP 68 ISO	1006580026
RP303	RES NTWK 8 PIN SIP 68 ISO	1006580026
RP304	RES NTWK 8 PIN SIP 68 ISO	1006580026
RP305	RES NTWK 8 PIN SIP 68 ISO	1006580026
RP306	RES NTWK 8 PIN SIP 68 ISO	1006580026
RP307	RES NTWK 8 PIN SIP 68 ISO	1006580026
RP308	RES NTWK 8 PIN SIP 68 ISO	1006580026
RP309	RES NTWK 8 PIN SIP 68 ISO	1006580026
RP310	RES NTWK 8 PIN SIP 68 ISO	1006580026
RP311	RES NTWK 8 PIN SIP 68 ISO	1006580026
RP401	RES NTWK 8 PIN SIP 68 ISO	1006580026
RP402	RES NTWK 8 PIN SIP 68 ISO	1006580026
RP403	RES NTWK 8 PIN SIP 68 ISO	1006580026
RP404	RES NTWK 8 PIN SIP 68 ISO	1006580026
RP405	RES NTWK 8 PIN SIP 68 ISO	1006580026
RP406	RES NTWK 8 PIN SIP 68 ISO	1006580026
RP407	RES NTWK 8 PIN SIP 68 ISO	1006580026
RP408	RES NTWK 8 PIN SIP 68 ISO	1006580026
RP501	RES NTWK 8 PIN SIP 68 ISO	1006580026
RP502	RES NTWK 8 PIN SIP 68 ISO	1006580026
RP503	RES NTWK 8 PIN SIP 68 ISO	1006580026
RP504	RES NTWK 8 PIN SIP 68 ISO	1006580026
RP505	RES NTWK 8 PIN SIP 68 ISO	1006580026
RP506	RES NTWK 8 PIN SIP 68 ISO	1006580026
RP507	RES NTWK 8 PIN SIP 68 ISO	1006580026
RP601	RES NTWK 8 PIN SIP 68 ISO	1006580026
RP602	RES NTWK 8 PIN SIP 68 ISO	1006580026
RP603	RES NTWK 8 PIN SIP 68 ISO	1006580026
RP604	RES NTWK 8 PIN SIP 68 ISO	1006580026
RP605	RES NTWK 8 PIN SIP 68 ISO	1006580026
RP606	RES NTWK 8 PIN SIP 68 ISO	1006580026
RP607	RES NTWK 8 PIN SIP 68 ISO	1006580026
RP608	RES NTWK 8 PIN SIP 68 ISO	1006580026
RP609	RES NTWK 8 PIN SIP 68 ISO	1006580026
RP610	RES NTWK 8 PIN SIP 68 ISO	1006580026
RP701	RES NTWK 8 PIN SIP 68 ISO	1006580026
RP702	RES NTWK 8 PIN SIP 68 ISO	1006580026
RP703	RES NTWK 8 PIN SIP 68 ISO	1006580026
RP704	RES NTWK 8 PIN SIP 68 ISO	1006580026
RP705	RES NTWK 8 PIN SIP 68 ISO	1006580026
RP706	RES NTWK 8 PIN SIP 68 ISO	1006580026
RP707	RES NTWK 8 PIN SIP 68 ISO	1006580026
RP708	RES NTWK 8 PIN SIP 68 ISO	1006580026
RP709	RES NTWK 8 PIN SIP 68 ISO	1006580026
RP710	RES NTWK 8 PIN SIP 68 ISO	1006580026
S101	SWITCH, PUSH BUTTON, SQUARE	1013270029
S102	SWITCH, PUSH BUTTON, SQUARE	1013270029
S103	SWITCH, PUSH BUTTON, SQUARE	1013270029
S104	SWITCH, PUSH BUTTON, SQUARE	1013270029
S105	SWITCH, PUSH BUTTON, SQUARE	1013270029
S106	SWITCH, PUSH BUTTON, SQUARE	1013270029
S107	SWITCH, PUSH BUTTON, SQUARE	1013270029
S108	SWITCH, PUSH BUTTON, SQUARE	1013270029
S109	SWITCH, PUSH BUTTON, SQUARE	1013270029
S110	SWITCH, PUSH BUTTON, SQUARE	1013270029

S111	SWITCH, PUSH BUTTON, SQUARE	1013270029
S112	SWITCH, PUSH BUTTON, SQUARE	1013270029
S113	SWITCH, PUSH BUTTON, SQUARE	1013270029
S114	SWITCH, ROTARY, BCD OUTPUT	1013280024
S115	SWITCH, ROTARY, BCD OUTPUT	1013280024
S116	SWITCH, TOGGLE, SPDT	1011790033
S117	SWITCH, PUSH BUTTON, SQUARE	1013270029
U101	IC. LINEAR LM2576-ADJ	1010610031
U102	IC DIGITAL 74HC589	1013250028
U103	IC,DIGITAL, UNC5841A	1012990028
U104	IC,DIGITAL, UNC5841A	1012990028
U105	IC DIGITAL 74HC589	1013250028
U106	IC DIGITAL 74HC589	1013250028
U107	IC. DIGITAL 74HC04	1010280023
U201	IC,DIGITAL, UNC5841A	1012990028
U202	IC,DIGITAL, UNC5841A	1012990028
U203	IC,DIGITAL, UNC5841A	1012990028
U204	IC,DIGITAL, UNC5841A	1012990028
U205	IC,DIGITAL, UNC5841A	1012990028
U206	IC,DIGITAL, UNC5841A	1012990028
U207	IC,DIGITAL, UNC5841A	1012990028
U301	IC,DIGITAL, UNC5841A	1012990028
U302	IC,DIGITAL, UNC5841A	1012990028
U303	IC,DIGITAL, UNC5841A	1012990028
U304	IC,DIGITAL, UNC5841A	1012990028
U305	IC,DIGITAL, UNC5841A	1012990028
U306	IC,DIGITAL, UNC5841A	1012990028
U401	IC,DIGITAL, UNC5841A	1012990028
U402	IC,DIGITAL, UNC5841A	1012990028
U403	IC,DIGITAL, UNC5841A	1012990028
U404	IC,DIGITAL, UNC5841A	1012990028
U501	IC,DIGITAL, UNC5841A	1012990028
U502	IC,DIGITAL, UNC5841A	1012990028
U503	IC,DIGITAL, UNC5841A	1012990028
U504	IC,DIGITAL, UNC5841A	1012990028
U601	IC,DIGITAL, UNC5841A	1012990028
U602	IC,DIGITAL, UNC5841A	1012990028
U603	IC,DIGITAL, UNC5841A	1012990028
U604	IC,DIGITAL, UNC5841A	1012990028
U605	IC,DIGITAL, UNC5841A	1012990028
U701	IC,DIGITAL, UNC5841A	1012990028
U702	IC,DIGITAL, UNC5841A	1012990028
U703	IC,DIGITAL, UNC5841A	1012990028
U704	IC,DIGITAL, UNC5841A	1012990028
U705	IC,DIGITAL, UNC5841A	1012990028

Figure 6.1.3.3 PC Assembly, Display Board, 1/9.

P2201A

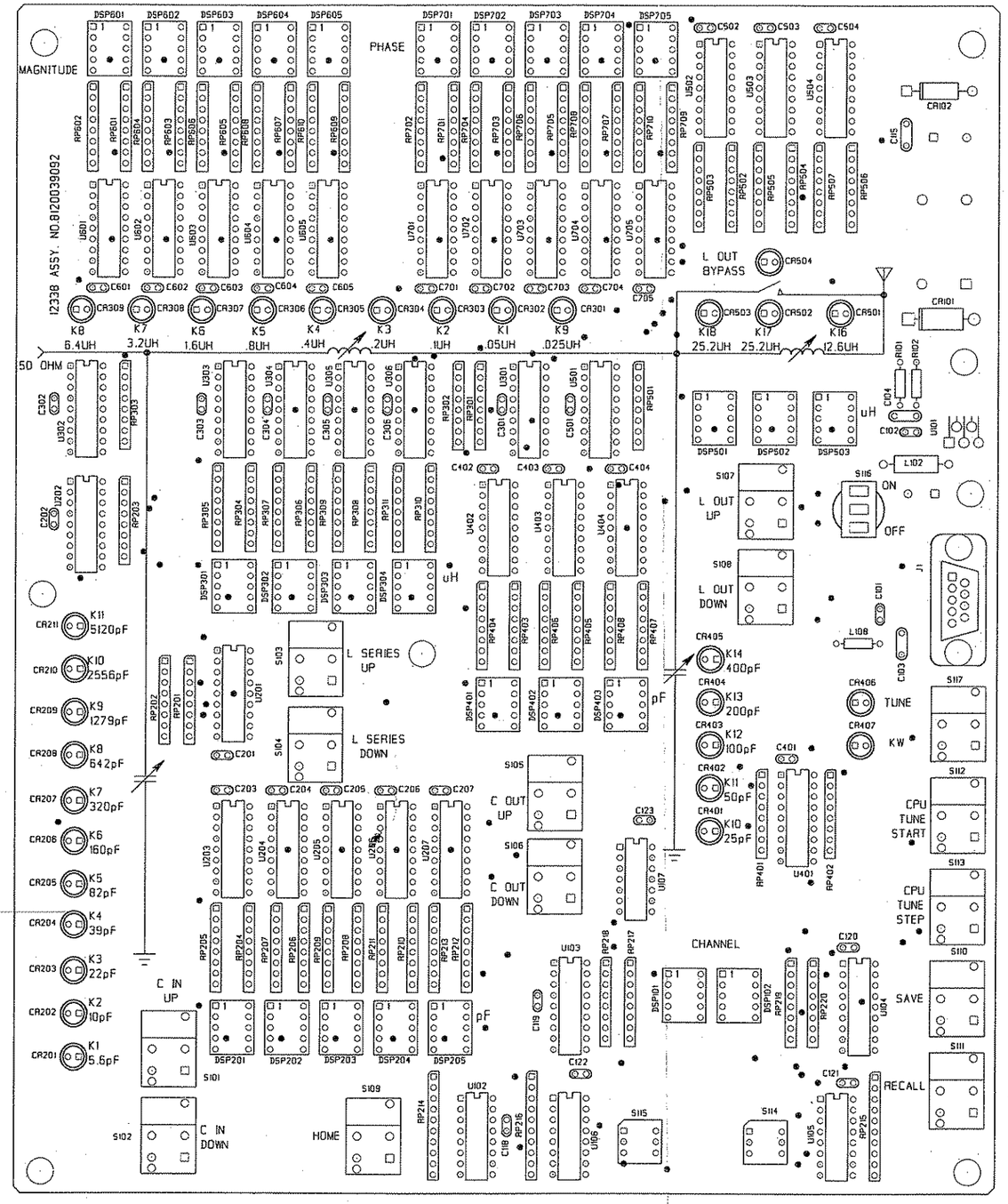

Figure 6.1.3.3 PC Assembly, Display Board, page 2/9.

A2201A

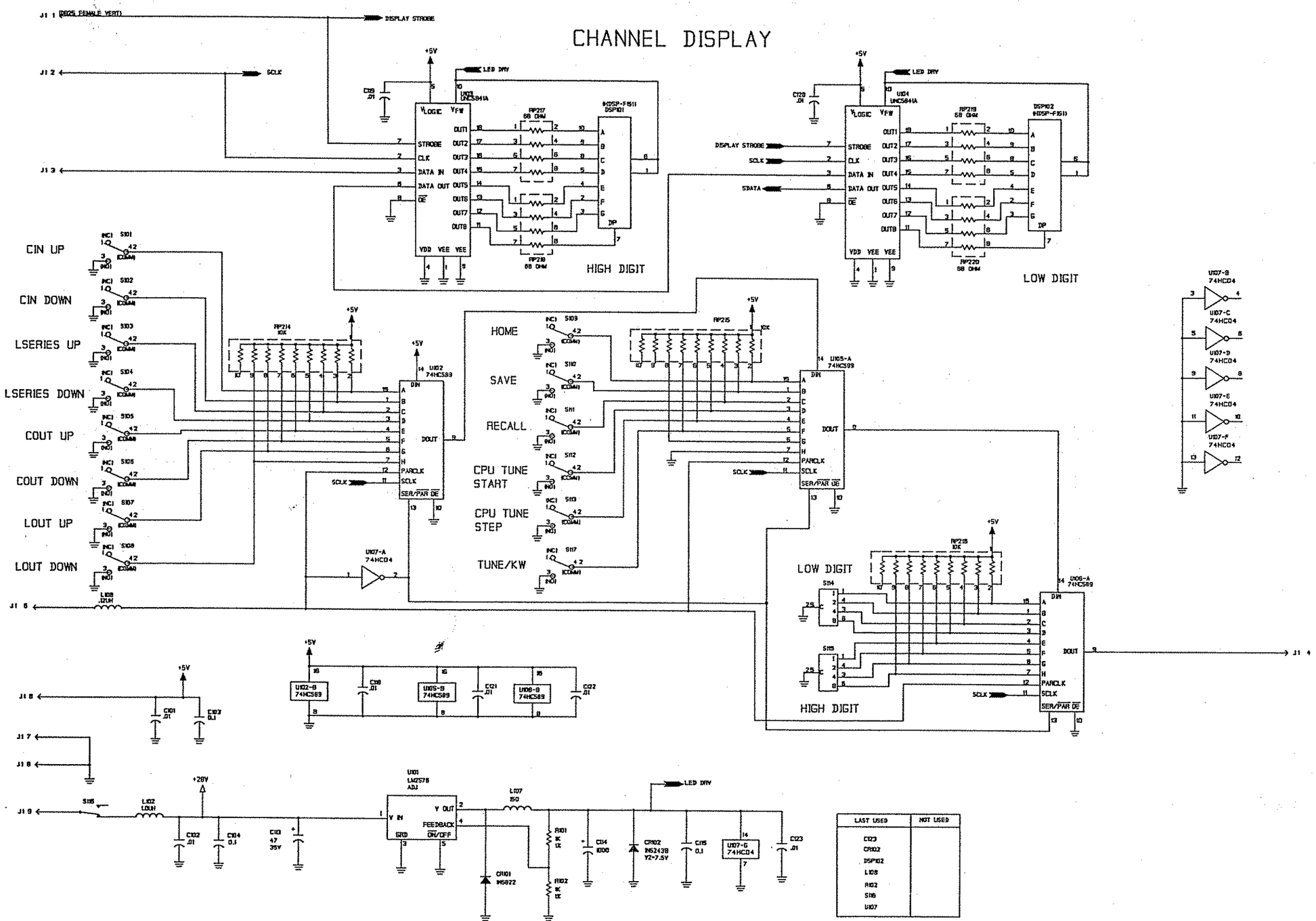

Figure 6.1.3.3 PC Assembly, Display Board, 3/9.

B2201A

CIN DISPLAY

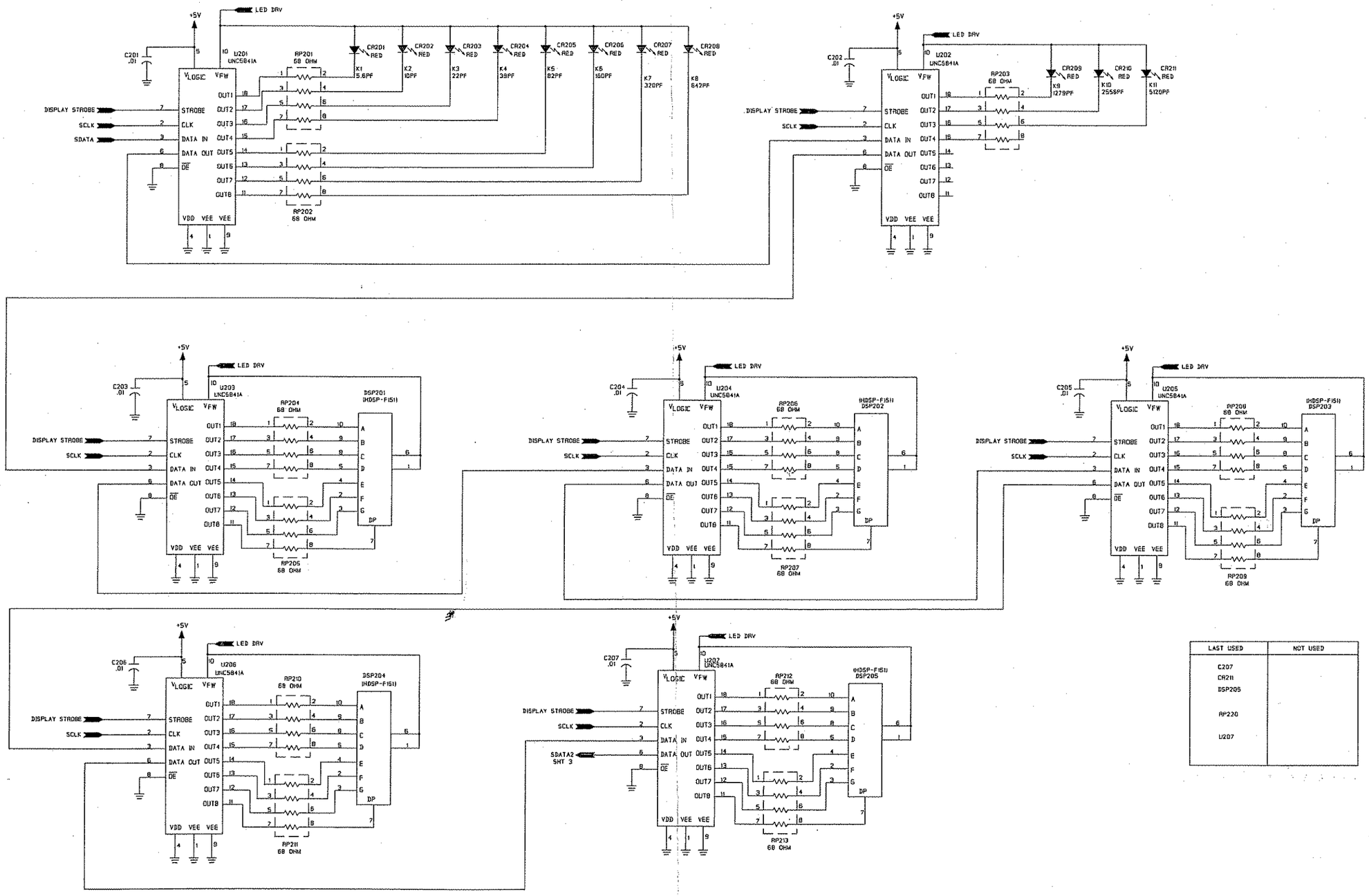

LAST USED	NOT USED
C207	
CR211	
DSP205	
RP220	
U207	

Figure 6.1.3.3 PC Assembly, Display Board, page 4/9.

C2201A

LSERIES DISPLAY

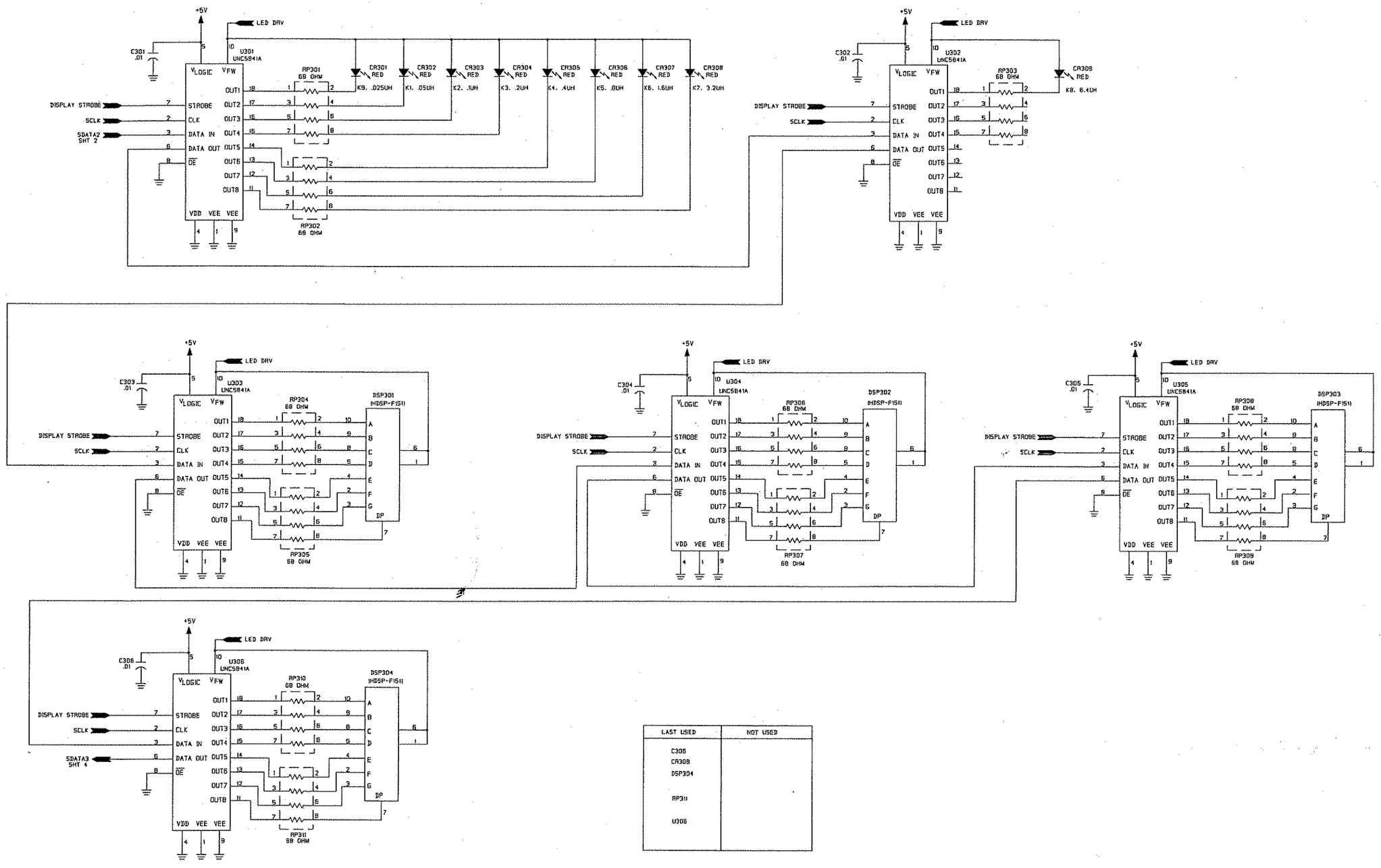

LAST USED	NOT USED
C306 CR309 DSP304 RP311 U306	

Figure 6.1.3.3 PC Assembly, Display Board, page 5/9.

D2201A

COUT DISPLAY

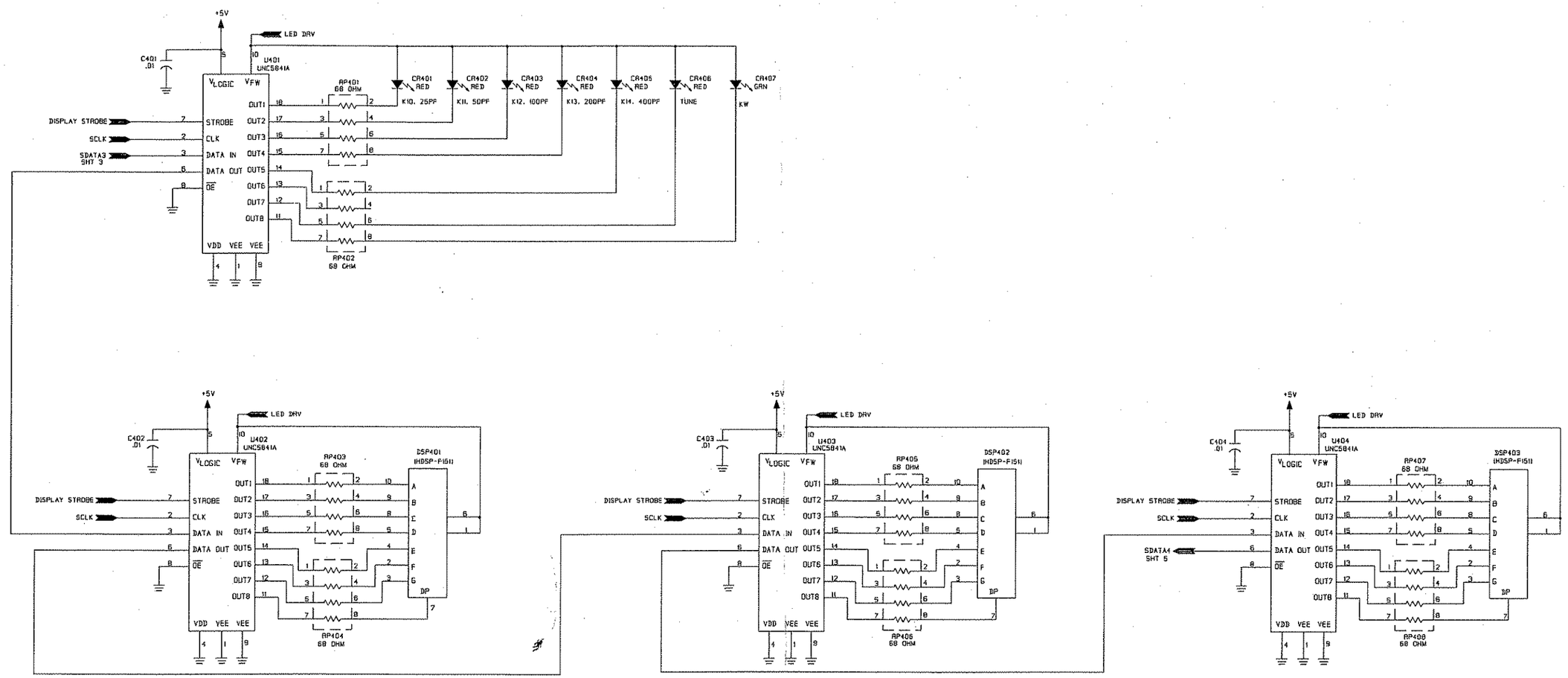

LAST USED	NOT USED
C404 CR405 DSP403 RP408 U404	

Figure 6.1.3.3 PC Assembly, Display Board, page 6/9.

E2201A

LOUT DISPLAY

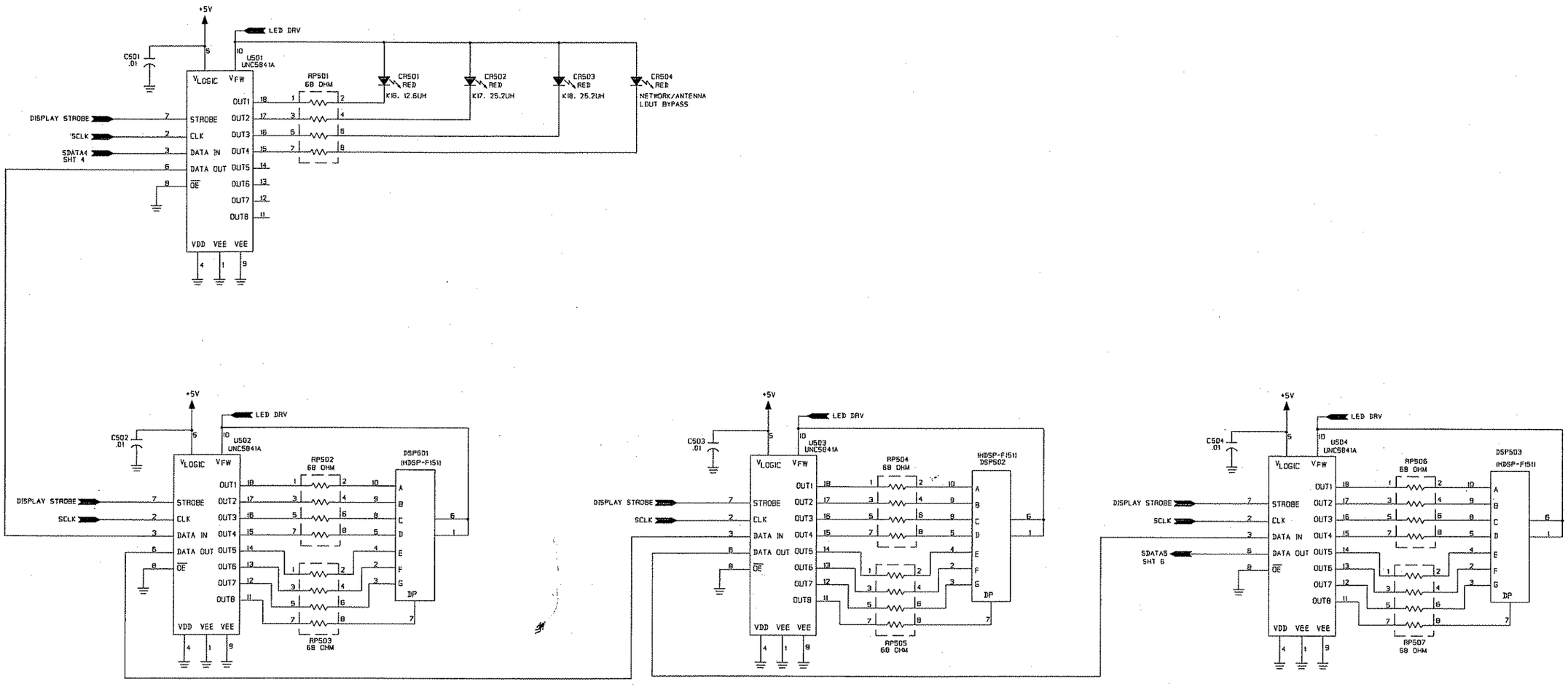

LAST USED	NOT USED
C504 CR504 DSP503 RP507 U504	

Figure 6.1.3.3 PC Assembly, Display Board, page 7/9.

F2201A

MAGNITUDE DISPLAY

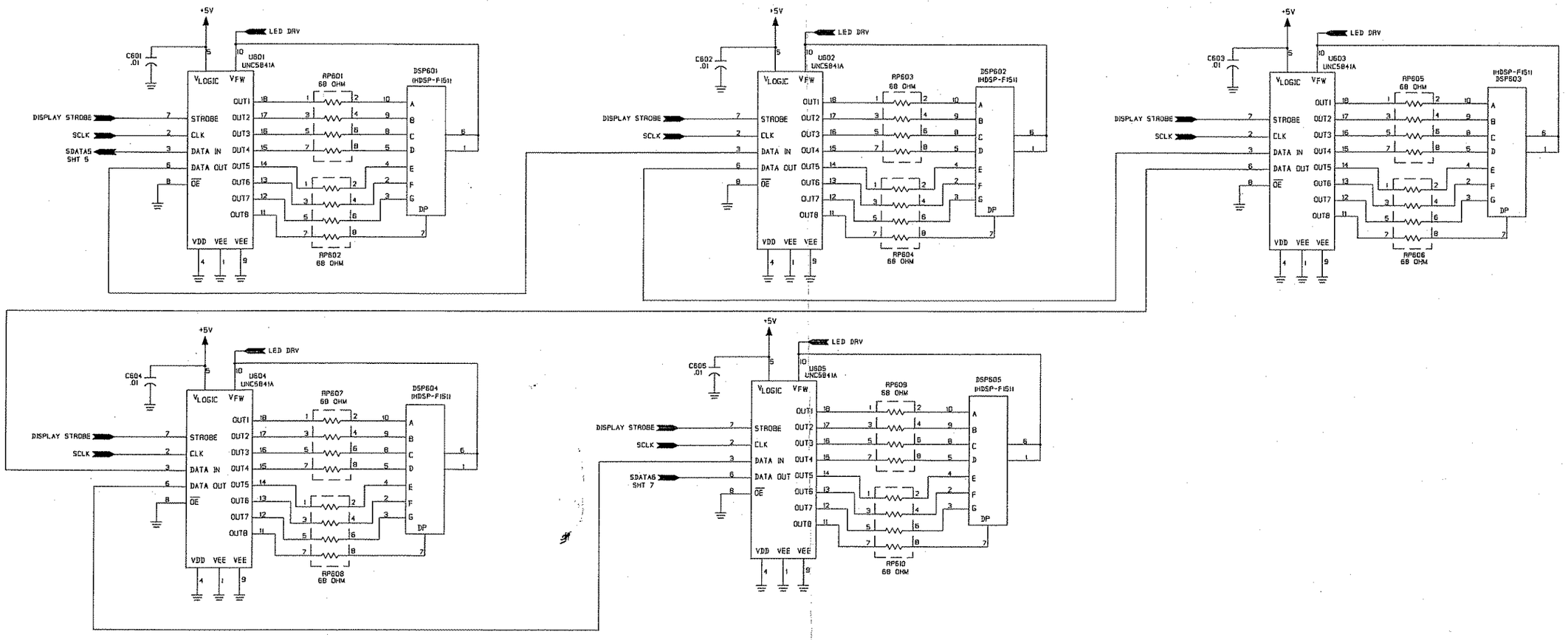

LAST USED	NOT USED
C605	
DSP605	
RP610	
U605	

Figure 6.1.3.3 PC Assembly, Display Board, page 8/9.

G2201A

PHASE DISPLAY

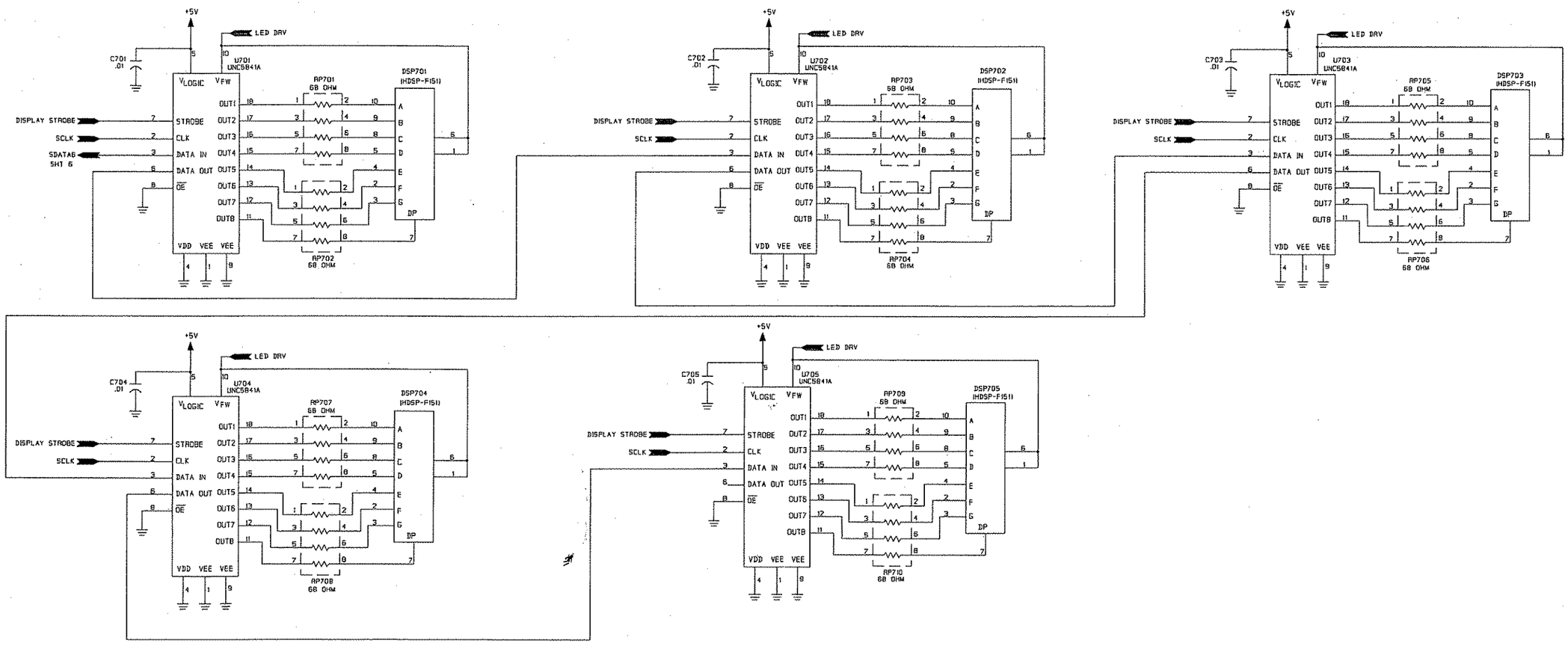

LAST USED	NOT USED
C705	
DSP705	
RP710	
U705	

Figure 6.1.3.3 PC Assembly, Display Board, page 9/9.

THIS PAGE INTENTIONALLY LEFT BLANK.